SMITH®

CUSTOMER DRIVEN

PG-22

SMITH YELLOW PAGES • PG-22 PRODUCT GUIDE

www.jrsmith.com

SMITH® CUSTOMER DRIVEN SINCE 1926

JAY R. SMITH MFG. CO.®
MEMBER OF MORRIS GROUP INTERNATIONAL

MORRIS GROUP INTERNATIONAL®

TABLE OF CONTENTS

CONTRACTOR FRIENDLY PRODUCTS 3-18

FIXTURE SUPPORTS (Fig. 0100-0900 Series) 19-104

Technical Data 22-29

Closet Supports (0100-0600 Series) 30-85

Miscellaneous Urinal, Lavatory & Sink Supports 86

Lavatory & Sink Supports (0700-0900 Series) 87-104

ROOF DRAINS (Fig. 1000 Series) 105-137

Technical Data 107-108

GREEN ROOF DRAINS (Fig. 1900 Series) 138-140

FLOOR DRAINS (Fig. 2000 Series) 141-214

Technical Data 146

SANITARY DRAINS (Fig. 3000 Series) 215-244

Technical Data 218

CLEANOUTS (Fig. 4000 Series) 245-284

Technical Data 248-250

ACCESS DOORS (Fig. 4700 Series) 278-282

HYDROTROLS (Fig. 5000 Series) 285-290

Technical Data 287-288

HYDRANTS (Fig. 5500-5900 Series) 291-320

Technical Data 293-294

BACKWATER VALVES (Fig. 7000 Series) 321-326

Technical Data 332

INTERCEPTORS (Fig. 8000 Series).....327-358

Technical Data 329-332

GREASE+GARD®II 356-358

SPECIALTIES (Fig. 9000 Series) 359-383

CORROSION RESISTANCE DATA 384

TYPICAL PAGE

To help you use this price guide as an effective working aid, it has been organized to make specifying and ordering easy. Note the following highlights and features.

FUNCTION: Shows application (where product should be used and why.

Large, accurate photographs of actual product.

REGULARLY FURNISHED: Shows what is furnished

Subheadings indicate specific category

Accurate, clean, drawings include necessary dimensions and significant descriptive information.

OPTIONS: Availability of alternative finishes and metals also indicates availability of parts (optional additions or substitutes)

Suffix Letter

Outlet size and type (where applicable) listed under products.

Page Number

ROOF DRAINS

SMITH® CUSTOMER DRIVEN SINCE 1926

FIG. 1010 16" DIAMETER - LOW PROFILE DOME

FUNCTION: Used in flat roof of any construction. Large low profile dome provides sufficient free area for quick drainage of rain water & protects the drain sump and connected piping from the intrusion of debris. Wide clamping surface holds flashing & roofing materials without puncturing.

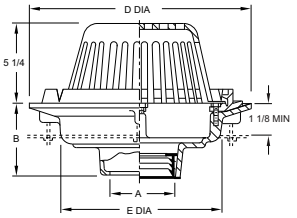

A OUTLET SIZE	D FLANGE DIA.	E DIA.	FREE AREA SQ IN	†DUCO CI POLY DOME	DUCO CI W/ ALUM DOME	APPROX. WEIGHT LBS
02, 03, 04"	15 1/4"	11"	102.5	**908.00**	**1,222.00**	28
05, 06"	15 1/4"	11"	102.5	**1,299.00**	**1,613.00**	28
08"	16"	12 1/2"	102.5	**1,688.00**	**2,002.00**	30

A OUTLET SIZE	D FLANGE DIA.	E DIA.	FREE AREA SQ IN	**†DUCO CI CI DOME	DUCO CI W/ ALUM DOME	APPROX. WEIGHT LBS
08"	20"	16"	228	**2,421.00**	**3,173.00**	34
10"	16"	12 1/2"	122.5	**2,668.00**	**3,358.00**	36
10"	20"	16"	228	**2,764.00**	**3,516.00**	36
12"	20"	16"	228	**2,857.00**	**3,609.00**	40

Add **458.00 to Galvanize the Cast Iron Dome.

REGULARLY FURNISHED: Duco Cast Iron Body with Combined Flashing Clamp and Gravel Stop with Dome.

OUTLET VARIATIONS (Specify type of outlet and pipe size in inches.)

Outlet Type	Outlet Designation Outlet Type/Pipe Size	"B" Body HT. DIM.	ADD
Inside Caulk	C02, C03, C04, C05, C06	5"	N/C
	C08, C10	*6"	N/C
Speedi-Set SW	L02, L03, L04	5"	N/C
Speedi-Set XH	LXH02, LXH03, LXH04	5"	N/C
Threaded	T02, T03, T04, T05, T06	3 3/4"	99.00
	T08, T10	*5"	99.00
No-Hub	Y02, Y03, Y04, Y05, Y06	5"	N/C
	Y08, Y10	*6"	N/C
	Y12	7 3/4"	N/C

*This dimension is for 16" dia. flange size body. For 20" flange size body dimension is 7 3/4".

OPTIONS:		ADD
-AA	Aluminum Body (2-6" only)	POA
-B	Bucket	327.00
-C	Aluminum Underdeck Clamp (15 & 16" Flange Bodies)	310.00
-C	Cast Iron Underdeck Clamp (20" Flange Bodies)	616.00
-C2	Secondary Flashing Clamp	238.00
-CID	CI Dome (when not reg. furn.)	271.00
-CID8	8" High CI Dome	589.00
-CIDG	Cast Iron Dome **with** Galvanizing	730.00
-CL	Angular Underdeck Clamp	626.00
-DE	Deck Elevator Extension	1,325.00
-DID	Drain Installation Device 2-6"	458.00
-E	Extension up to 4"	849.00
	per inch over 4"	202.00
-G	Galvanized CI	1,229.00
-GRT	CI Grate in lieu of Dome	886.00
-PDSSM	SS Mesh on Poly Dome	642.00
-R	Sump Receiver (15 & 16" Flange Bodies)	345.00
-R	Sump Receiver (20" Flange Bodies)	690.00
-RBD	Rough Brz Dome	1,063.00
-RDP	Roof Deck Plate (15 & 16" Flange)	556.00
-RDP	Roof Deck Plate (20" Flange)	994.00
-SSM	SS Mesh on Metal Dome (Specify dome)	642.00
-U	Vandal Proof Dome	158.00

FIG. DX1010 WIDE FLANGE BODY - SECURED DOME

FUNCTION: For use in promenade roof deck and rooftop recreational areas where traffic bearing roof deck covering is to be applied. Drain body sump is protected from leaves, paper and other debris by large secured dome.

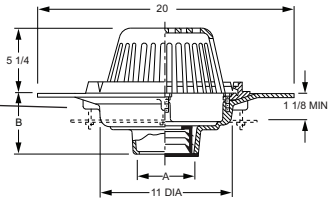

A OUTLET SIZE	FLANGE DIA.	FREE AREA SQ IN	†DUCO CI POLY DOME	APPROX. WEIGHT LBS
02, 03, 04"	20"	102.5	**2,604.00**	50
05, 06"	20"	102.5	**2,989.00**	50

REGULARLY FURNISHED: Duco Cast Iron Wide Flange Body with Combined Flashing Clamp and Gravel Stop with Polyethylene Dome.

OUTLET VARIATIONS (Specify type of outlet and pipe size in inches.)

Outlet Type	Outlet Designation Outlet Type/Pipe Size	"B" Body HT. DIM.	ADD
Inside Caulk	C02, C03, C04, C05, C06	5"	N/C
Speedi-Set SW	L02, L03, L04	5"	N/C
Speedi-Set XH	LXH02, LXH03, LXH04	5"	N/C
Threaded	T02, T03, T04, T05, T06	3 3/4"	99.00
No-Hub	Y02, Y03, Y04, Y05, Y06	5"	N/C

OPTIONS:		ADD
-AD	Aluminum Dome	314.00
-C	Aluminum Underdeck Clamp	310.00
-CID	CI Dome	271.00
-CIDG	Cast Iron Dome **with** Galvanizing	730.00
-CID8	8" High CI Dome	589.00
-CL	Angular Underdeck Clamp	626.00
-G	Galvanized CI	1,603.00
-PDSSM	SS Mesh on Poly Dome	642.00
-RBD	Rough Bronze Dome	1,063.00
-SH	Securing Holes	156.00
-SSM	SS Mesh on Metal Dome	642.00
-U	Vandal Proof Dome	158.00

110 †REGULARLY FURNISHED

MATERIALS & FINISHES

DUCO COATED CAST IRON -CI Smith Cast Iron possesses exceptional strength and durability, and is regularly furnished with a high quality enamel paint coating which prevents rusting. Duco Coated Cast Iron Drains are normally used in outside areas, factory spaces and similar applications where the discoloration caused by surface oxidation is not objectionable. Cast Iron is the traditional plumbing material furnished in a good grade of gray iron. This material has excellent resistance to corrosion in the normal drainage waste applications.

DUCTILE IRON -M Smith Ductile Iron is a cast iron possessing ductile and shock resisting qualities in addition to greater strength when compared to gray iron. Special alloying elements produce these qualities. Ductile Iron is recommended for grates and other components subject to severe load, service and shock conditions.

GALVANIZED CAST IRON -G Smith Galvanizing is a process of applying a heavy zinc coating to a thoroughly cleaned iron casting. This coating contains 95% zinc in a cold applied process. Smith galvanizing can be supplied on all cast iron parts. It increases longevity and is recommended wherever the discoloration caused by oxidation of cast iron is objectionable. Galvanizing is recommended in coastal and industrial areas where corrosive atmosphere may be encountered. Smith galvanizing meets and exceeds Federal Specifications MIL-P-21035, MIL-P-26915A, MIL-P-26433, and MIL-C-10578 (Type II). It also meets ASTM DES A239-41 and is listed by Underwriters Laboratories, Inc. (U.L.)

ACID RESISTING PORCELAIN ENAMEL -A.R.E. Smith Acid Resisting Porcelain Enamel provides a superior "Sanitary" finish for cast iron floor drains and other products where ultimate sanitation and resistance to corrosion are required. Forming the basis of the A.R.E. SANI-CEPTOR line, the enamel produces a white glasslike sanitary surface which not only makes cleaning easy, it also gives a pleasing appearance.

Smith Quality Enameling requires a special "Enameling Grade" cast iron. Castings are also specially designed with large radius corners, and elimination of projections, recess and crevices. On special order, many Smith cast iron products can be furnished with this coating.

ACID RESISTANT COATING -A.R.C. Smith Acid Resistant Coating is a synthetic whose cure is achieved through a chemical reaction. Once applied, it becomes part of the substrate and is chemically inert. It also has excellent resistance to most chemicals encountered in D.W.V. systems.

NICKEL BRONZE -NB Smith Nickel Bronze is ideal for all installations which are subject to the abrasive polishing action of foot and other traffic, and is recommended over chrome plated for such applications. It is not a coating, but a solid cast metal of added strength which is regularly furnished with a permanent silvery satin lustre, which blends with most decor. The buffing action of foot traffic actually helps maintain the lustre. Nickel Bronze is recommended where sparking hazards exist.

CHROME PLATED -CP Smith Chromium Plated Bronze is ideal for installations in walls, gutters, and other areas where a bright decorative finish is desired, not subject to the abrasive action of foot and other traffic. It is not recommended for installations where abrasion will eventually wear through and cause peeling.

POLISHED BRONZE -PB Smith Polished Bronze is regularly furnished in a permanent bronze satin lustre. It is recommended for finished areas where the bronze color is desired to match the decor. In addition to its lasting qualities, the abrasive action of foot and other traffic helps maintain the lustre, and it is non-sparking.

SILICON BRONZE -SB Smith Silicon Bronze is a bronze which is superior to regular bronze for many special applications. "Everdur" (Anaconda American Brass Company), is the trade name of a common high silicon bronze alloy, possessing excellent corrosion resistant properties combined with high strength, ductility and shock resistance. Available on special order.

STAINLESS STEEL -SS Smith Stainless Steel castings are normally produced in Type CF8 (304) which is an 18-8 Austenitic Stainless possessing excellent corrosion resistant qualities. For some applications where conditions demand, Type CF8M (316) stainless steel can be supplied. Items formed from stainless steel sheet and other stainless steel products are regularly furnished in Type 304 with 316 as an optional material.

ALUMINUM -A Smith Aluminum is supplied in casting grade 319, an alloy containing both silicon and copper. It is a solid cast metal in a pleasing light gray color. The light weight, coupled with its exceptional strength and corrosion resistance, make it ideal for drain components such as sediment buckets and strainers. When used with acid-resisting porcelain enamel coated drains, the possibility of chipping is minimized.

SMITH®
SINCE 1926

JAY R. SMITH MFG. CO.®
MEMBER OF MORRIS GROUP INTERNATIONAL

SMITH CONTRACTOR LABOR SAVING AND VALUE ADDED PRODUCTS

From prefabrication to install, these products help save you time and money at every stage of the project.

CONTRACTOR FRIENDLY

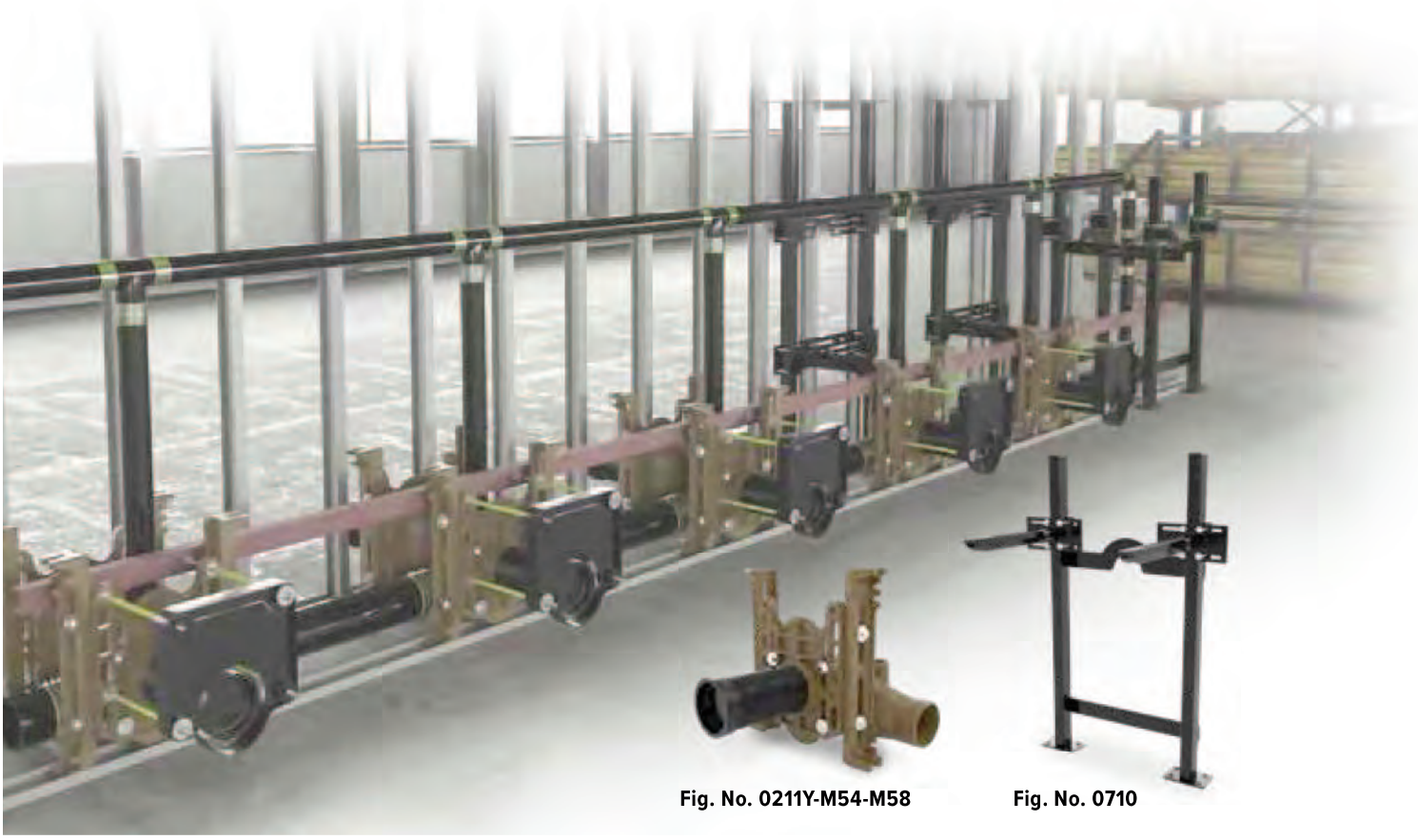

Fig. No. 0211Y-M54-M58

Fig. No. 0710

Fig. No. 4020

Fig. No. 1015

Fig. No. 5515

Figure No. 5515-R

Save Time & Money with Jay R. Smith Mfg. Co.

Labor Saver® fixture supports for water closets, lavatories, and toilets help you complete jobs faster and more efficiently.

TIME ADDS UP

Each Labor Saver fixture support can save you 15-20 minutes on installation time per support. This adds up to hours over the course of a job!

HOW?

Labor Saver fixture supports come pre-assembled! Supports feature a one-piece, unitized construction, while the Quarterback Water Closet Support ships with legs and faceplate already attached.

- **Pre-assembly means...**
  - No missing parts
  - Faster install at pre-fab shop creating faster install on jobsite
  - Less waste
- **Stocked for shipment**
  - Quicker order fulfillment
  - Ability to take on rush projects

ENHANCED PREFABRICATION CAPABILITIES

- Assemble any number of fixture supports
- Many options for battery prefabrication style
- All supports feature numerous attachment points for maximal flexibility.
- Transport entire battery to job site as one piece.

PREFABRICATION SAVES

- Time
- Labor
- Money

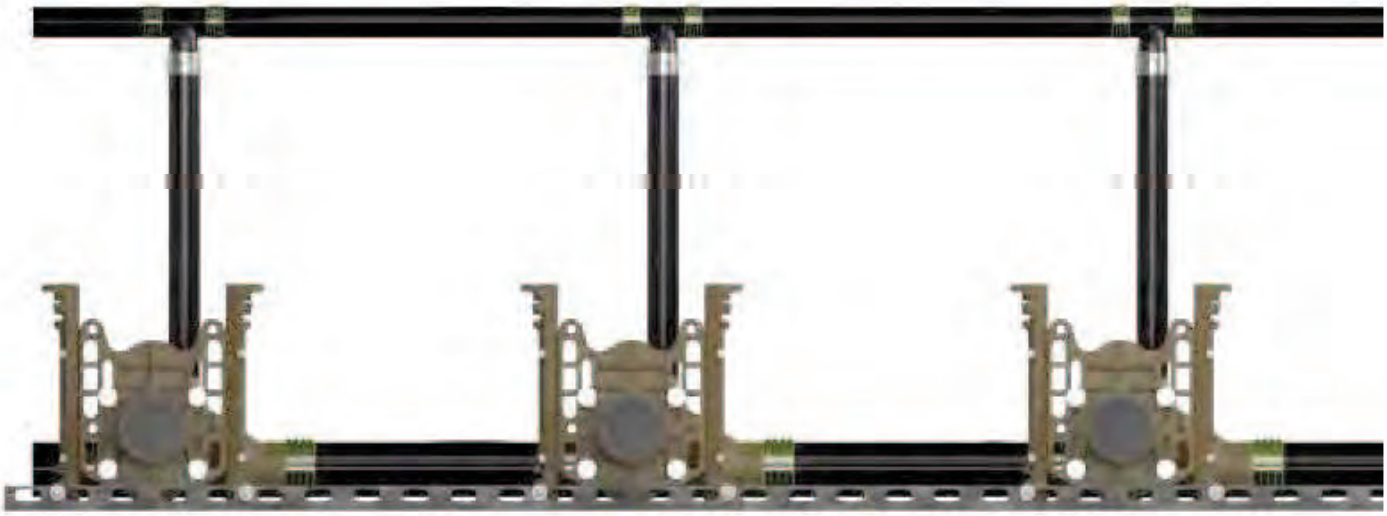

Our labor-saving fixture supports feature a number of attachment points, making it easy to prefabricate and plumb batteries before transporting to the job site.

JAY R. SMITH MFG. CO. 800.467.6484 www.jrsmith.com

Labor Saver® Supports

Urinal Support
with Hanger Plate
Fig. No. 0617

- Floor-mounted legs
- Easy field adjustment
- Suitable for narrow wall and metal stud configurations
- TAB option allows for two anchors per foot (Fig. No. 0710-TAB)
- Fixture-specific arms eliminate additional labor for lengthy in-field configuration and/or adjustment
- Height and side-to-side adjustment is done from the front of the support, using four nuts

Lavatory Support
with Concealed Arms
Fig. No. 0710

CONTRACTOR FRIENDLY

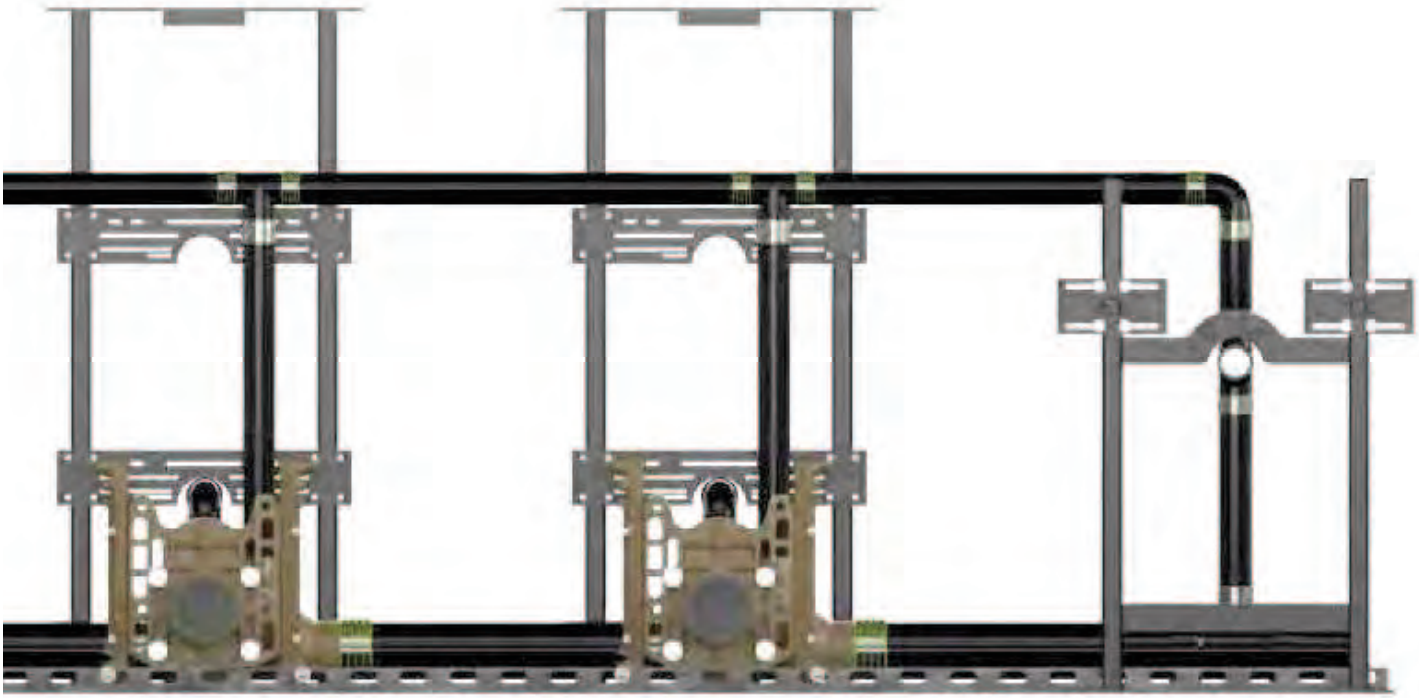

Quarterback® Water Closet Support

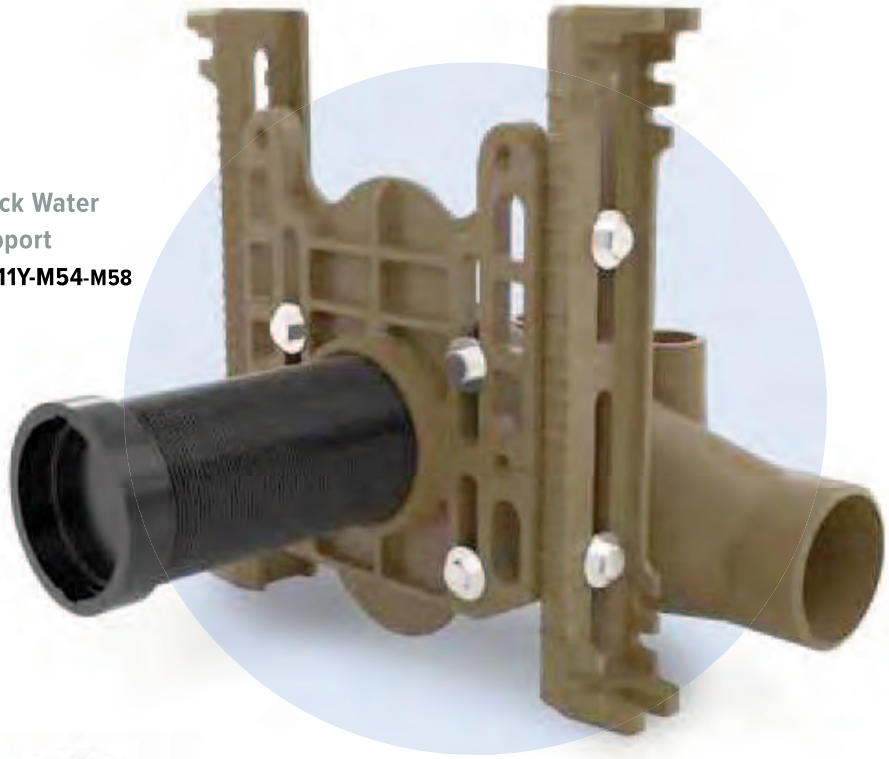

Quarterback Water Closet Support
Fig. No. 0211Y-M54-M58

Left, right, double, and vertical fittings available. Fittings with auxiliary inlet option tie in nearby urinal or lavatory

Optional auxiliary inlet

36" long barrel fittings connect fixtures supports to each other, eliminating pipe connections and possible leak points

Labor Saving Features

Legs provide numerous mounting options for fixture support battery prefabrication or flush valve supply line support

Legs provide enough space for job-site adjustments between studs

Easy access to faceplate bolts for quick adjustment during prefabrication

Faceplate kit arrives with legs pre-secured to faceplate. Adjust-to-wall and O-ring style faceplate kits available

One anchor per leg for fast and easy installation (anchor is installed through notch in bottom of foot)

CONTRACTOR FRIENDLY

Battery Prefabrication Options

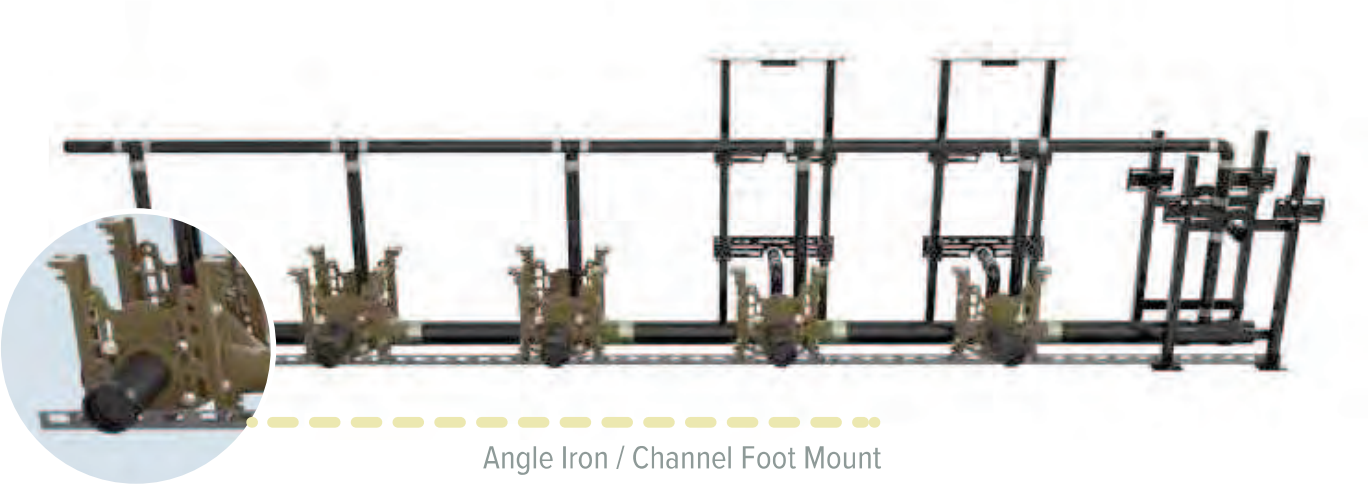

Angle Iron / Channel Foot Mount

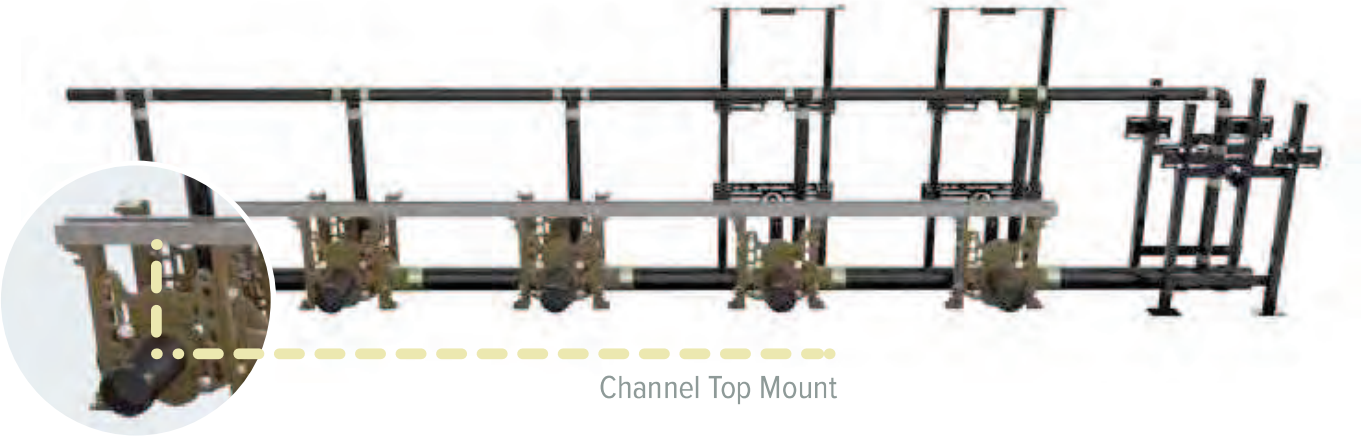

Channel Top Mount

Sheet Floor Mount

Batteries shown are for prefabrication and example only and are not methods for permanently anchoring the battery.

Battery Prefabrication Options

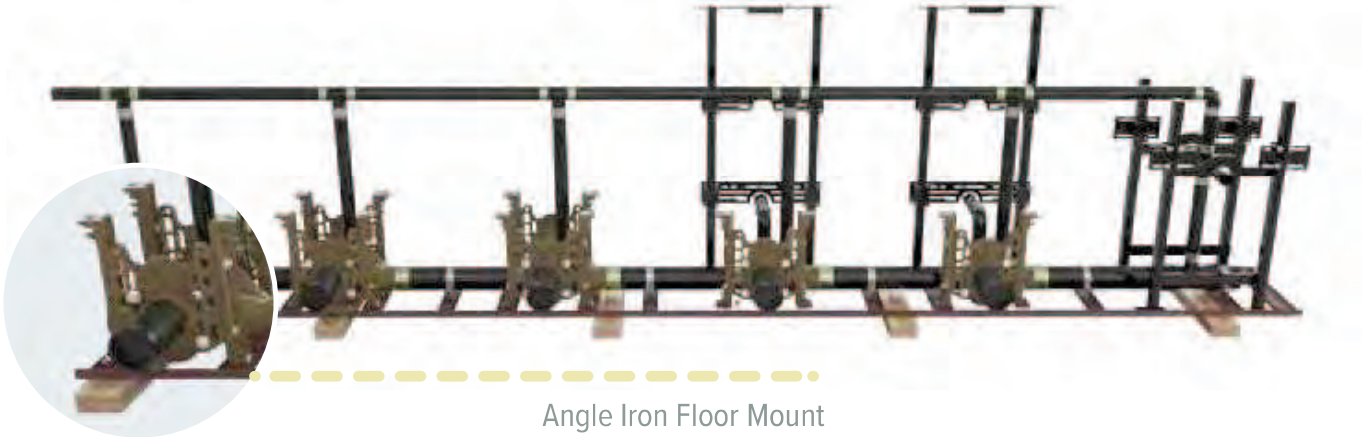

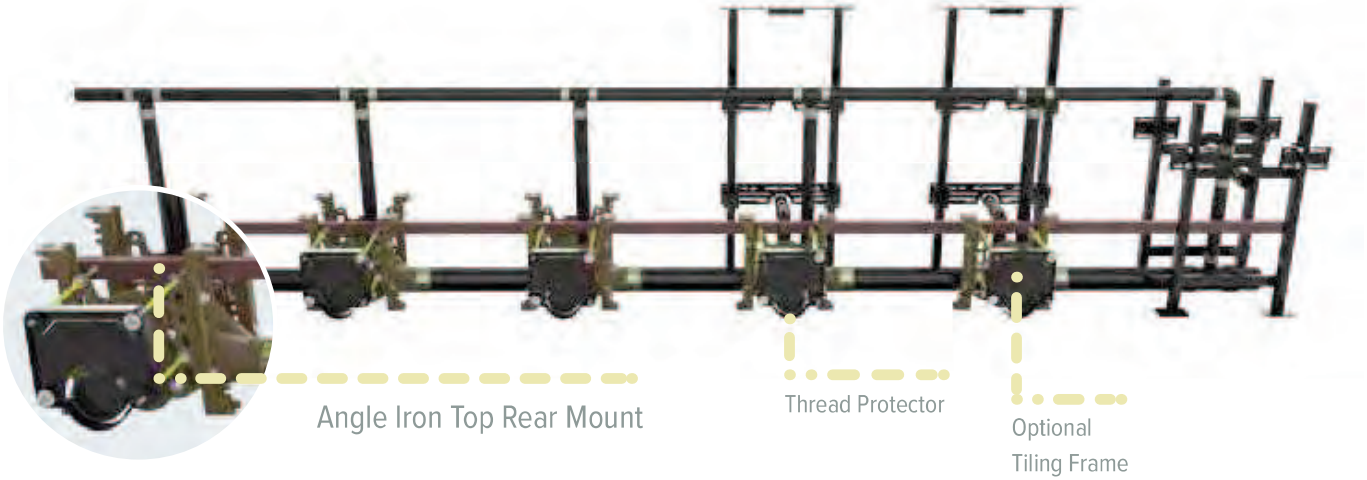

CONTRACTOR FRIENDLY

Quad Close® "Stink Stopper" Trap Seal Device

10 Year Warranty, Simple to Install and Easy to Remove—No Special Tools Needed, Fits Almost Any Floor Drain

The Answer to Infrequently Used Floor Drains and Sewer Gas Odors

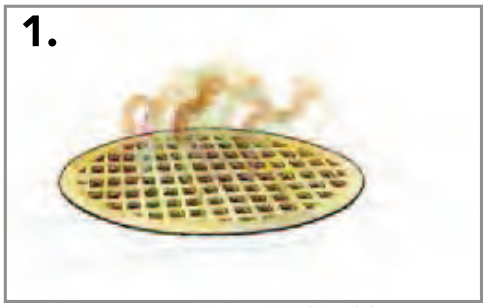

Sewer gas emissions are a real problem.

This is a job for the Stink Stopper!

The Stink Stopper is inserted into the strainer throat...

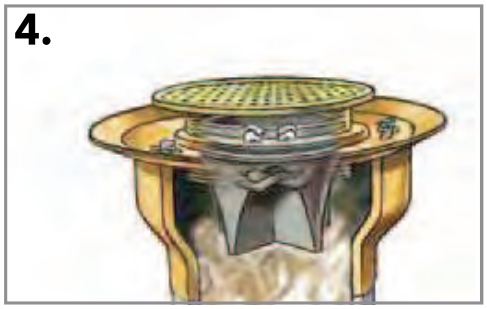

And sewer gas emissions are sealed off.

Quad Close Trap Seal Device
Figure No. 2692

Easy to Install—Insert the device in the drain outlet until it is flush with the bottom of the drain or top of the outlet piping. For strainers, insert the trap seal as low as possible into the throat of the strainer.

A value for the purchaser—Designed to handle a wide range of pipe and internal drain body diameters. Can be retrofitted into existing drains

Available in 1-1/2", 2"*, 3"*, 3-1/2"*, 4"*, & 6" sizes

A Tested and Reliable Solution –
IAPMO Listed: File No. 7479.*
ASSE Listed: Standard 1072—Record No. 1435*

Patent No. 8,844,572

Twist-To-Floor® Adjustable Cleanout Tops

Versatility in Adjustment Before and After the Pour

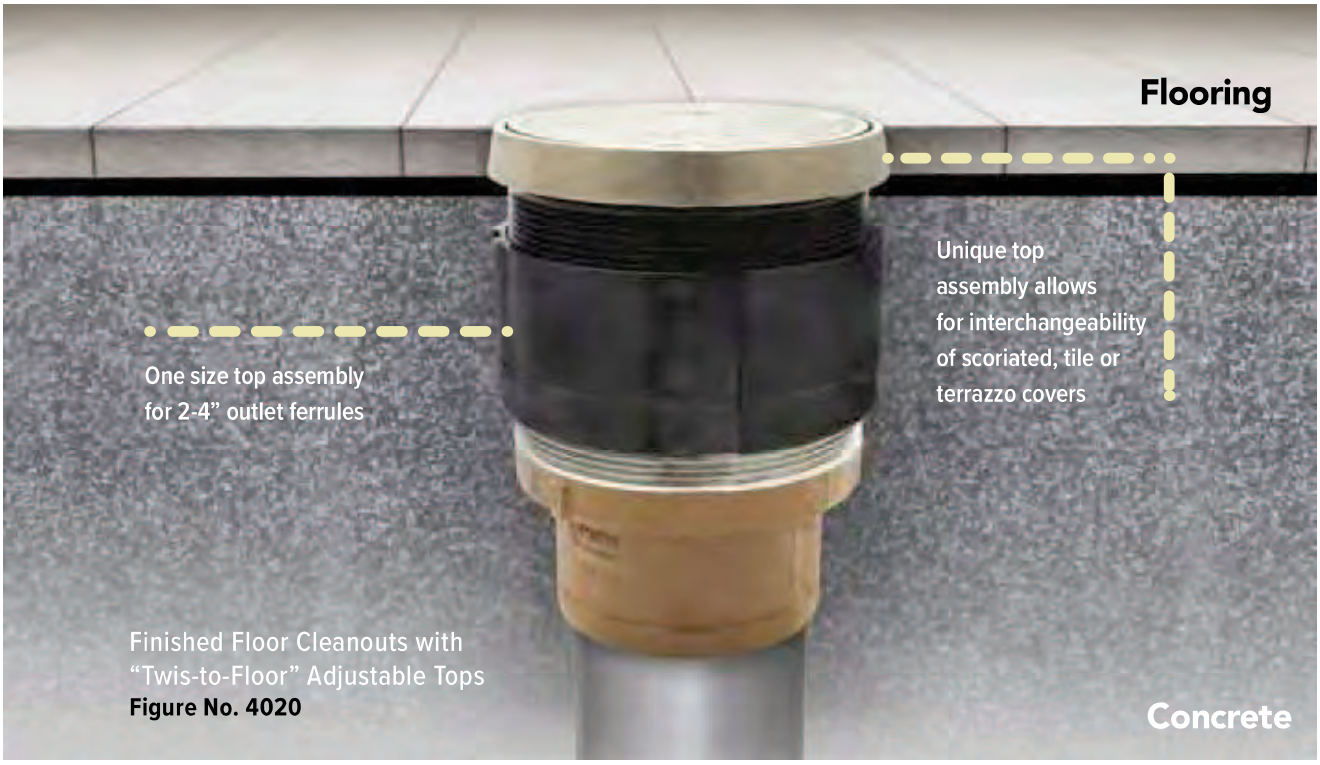

CONTRACTOR FRIENDLY

- Top frame stays in place when cover is removed
- Thicker finished floor cover reinforced with support ribs for strength and durability
- Smooth outside surface of the top assembly and thread protector Styrofoam ring maximize adjustment during and after the finished floor concrete pour

Ferrule Assembly Features:

- Top assembly offers easy attachment to ferrule.
- Easy to install clamping device.
- Cast iron clamping device providing maximum clamping force to the membrane.

Adjustable Roof Drain

Easily adjusts to accommodate variations in insulation depth

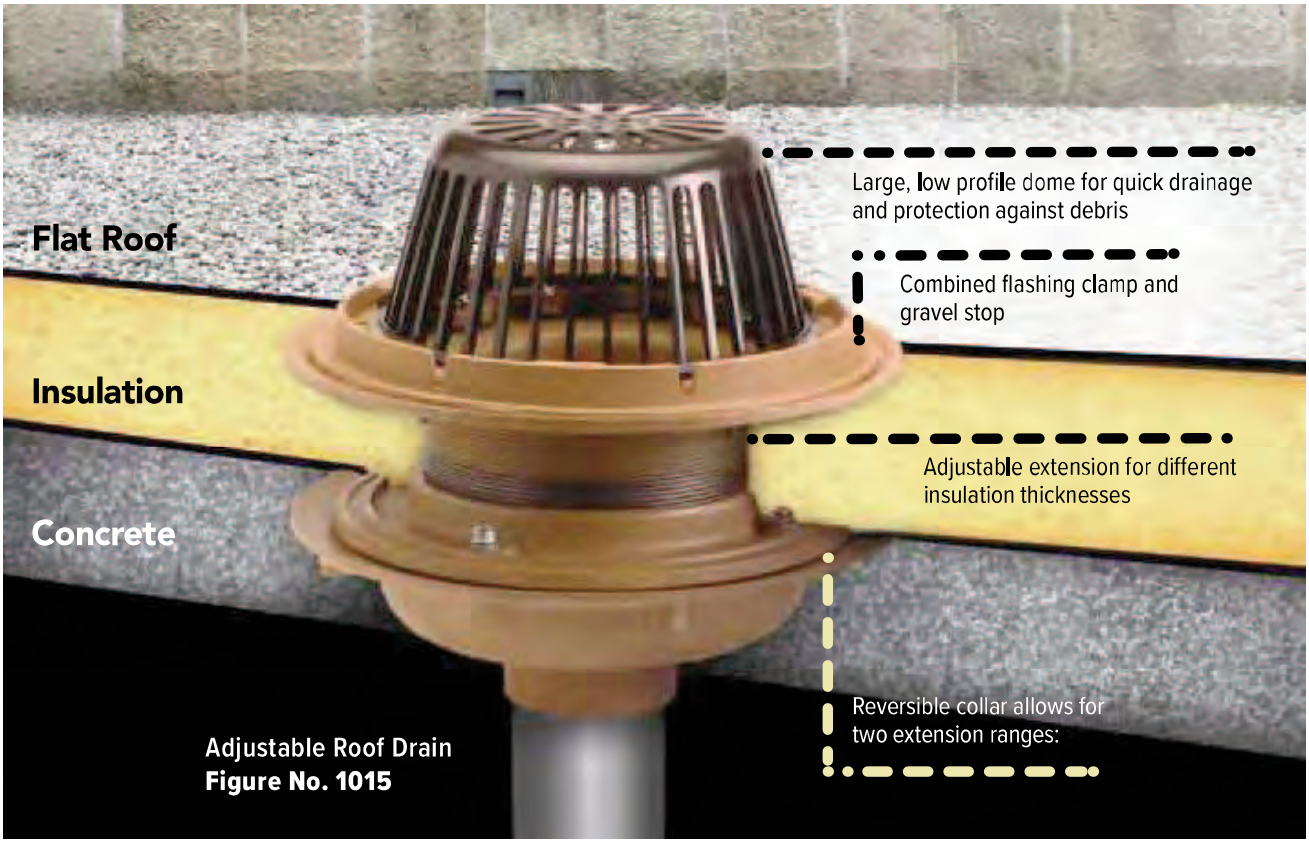

Adjustable Roof Drain
Figure No. 1015

Every bit of time savings counts over the course of a job. With the adjustable Roof Drain, you can:

- Simplify with one product rather than several of different sizes
- Make on-the-fly adjustments as needed
- Adjust to a wide range of sizes—from 1 1/4" to 4"

Siphonic Roof Drain

Full-bore flow in smaller pipes reduces material cost

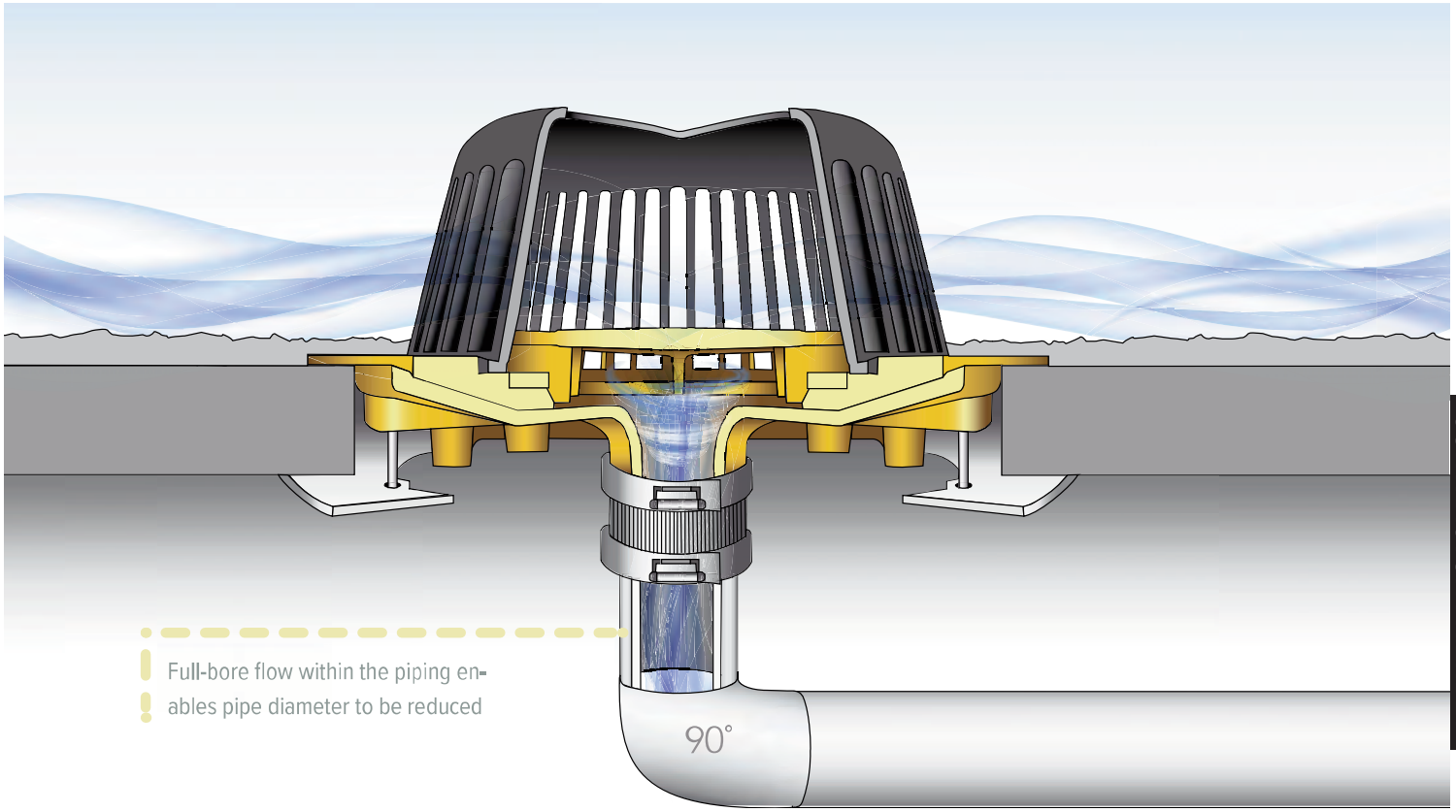

Full-bore flow within the piping enables pipe diameter to be reduced

CONTRACTOR FRIENDLY

Siphonic Roof Drain
Figure No. 1005

Siphonic Gutter Drain
Figure No. 1605

- Siphonic action is independent of pipe pitch or gradient.
- Smaller pipe diameters allow maximum use of open space and reduce material costs
- Minimizes slab installation costs
- Promotes self-cleaning of debris from the piping system.
- Fully tested and certified in accordance with ANSI/ASTM A112.6.9 "Siphonic Roof Drains"

Deck Plates

Creates a flat surface for the drain to sit on

* Recesses drain slightly to prevent water build-up
* Pre-assemble deckplate to drain, saving time at job site
* Only one rectangular penetration needed for deck plates with multiple drains

Pre-assemble drain and deck plate and install as one piece

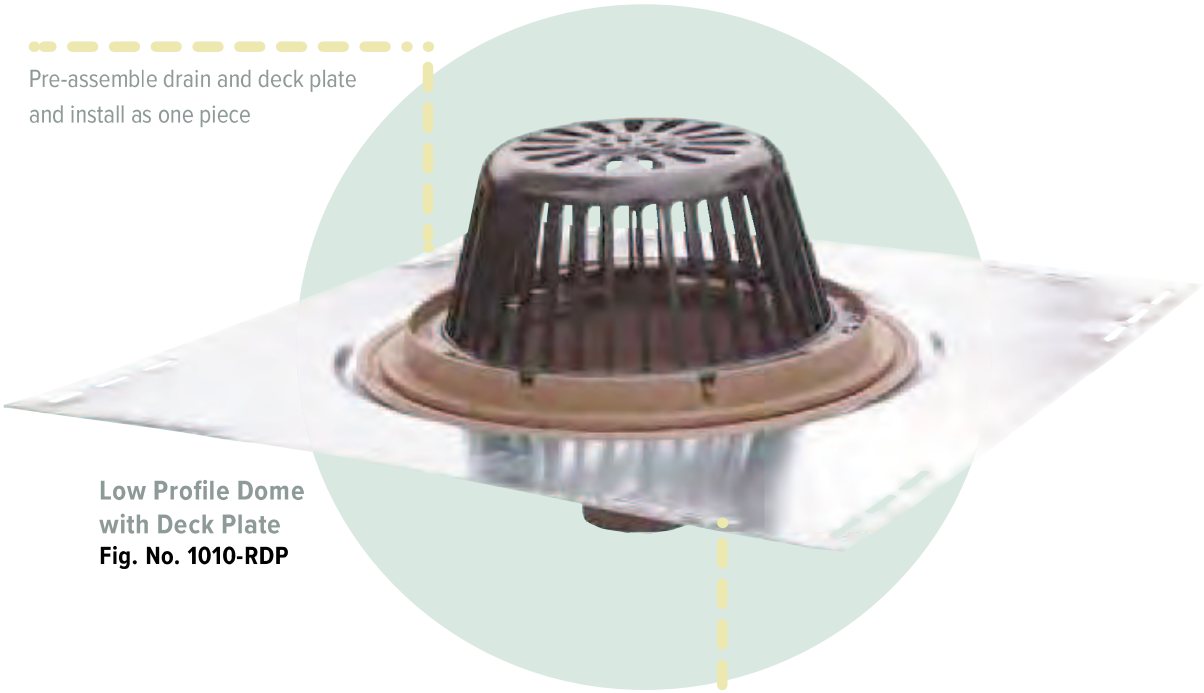

Low Profile Dome with Deck Plate
Fig. No. 1010-RDP

Single and multi-drain configurations available

Roof Drain and Overflow Drain with Deck Plate
Fig. No. 1800

Top Mount Drain Elevator

Adjustable time-saving device eliminates need for additional products

- Adjustable to compensate for insulation thickness. Overall adjustment height of 6-3/4”
- Drain Elevator is outside of the waterway, eliminating leaks
- Top adjustment at deck for an easier and more secure installation

The cast thread design provides for a quick adjustment—up or down with just one turn

Top mount reversible collar eliminates the need for a conventional extension, underdeck clamp and sump receiver

Top Mount Drain Elevator
Fig. No. 1010DEK

CONTRACTOR FRIENDLY

Elevates Figure Numbers 1005, 1010, 1070 and 1080 type roof drains

Guardian Plus Dual Check Hydrant

Repair At Your Convenience

Shut off water right at the hydrant—no need to shut off service to the entire building!

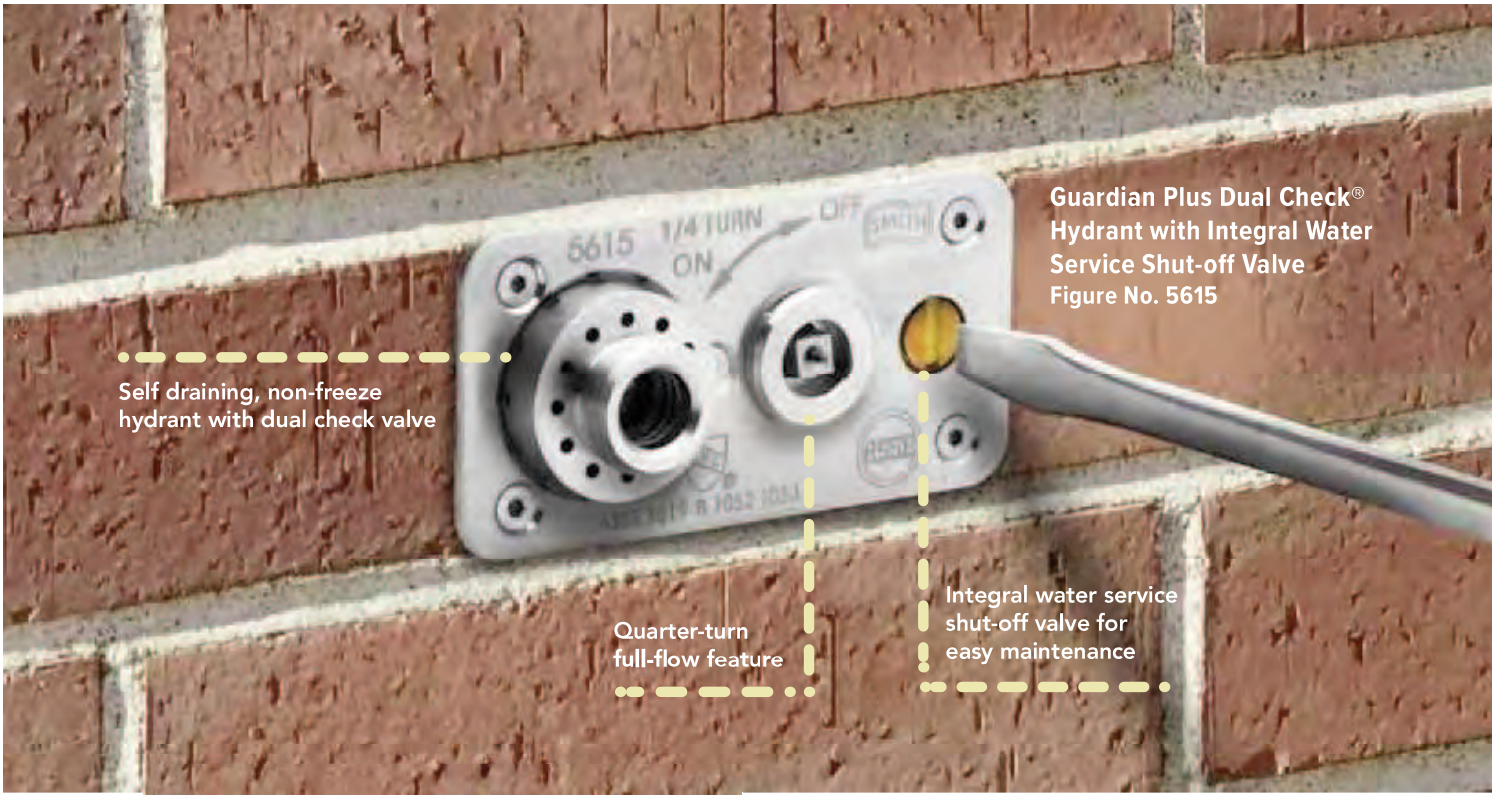

Guardian Plus Dual Check® Box Hydrant with Integral Stop Water Service Shut-off Valve and Non-Freeze Protection
Fig. No. 5515

- Self draining, non-freeze hydrant with dual check valve and integral vacuum breaker
- 3/4" (19) inlet and hose connection
- Bronze hydrant with stainless steel face
- Flush installation eliminates catch points
- Sized to one standard brick
- Available with or without tamper-proof, locking enclosure

Specifications:

- Complies with ASME A112.21.3M
- Complies with ASSE 1019B, 1052 and 1053
- IAPMO Listed, File #2749

CUT LABOR TIME BY 75%

Cored Drill Hydrant Box offers easy install in concrete buildings

Designed for tilt-up concrete buildings, this hydrant box can cut installation time by 75% or more. Once the building is erected and plumbed, just drill a 6” hole in the wall and slide the hydrant right in.

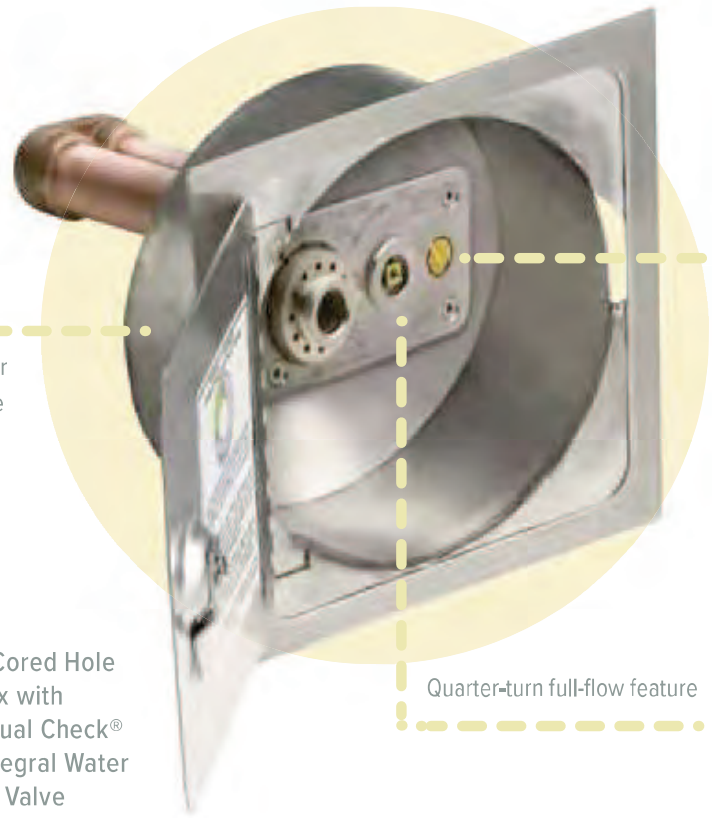

Fits 6” Diameter Cored Drill Hole

Integral water service shut-off valve for easy maintenance

Quarter-turn full-flow feature

Stainless Steel Cored Hole Drill Hydrant Box with Guardian Plus Dual Check® Hydrant with Integral Water Service Shut-off Valve
Figure No. 5515-R

- Self draining, non-freeze hydrant with dual check valve and integral vacuum breaker
- Frame, cover & housing are made of 16 gauge, type 304 stainless steel
- 3/4” inlet and hose connection
- Locking hinged cover opens 180°
- Flush installation eliminates catch points

Specifications:

- Complies with ASME A112.21.3M
- Complies with ASSE 1019B, 1052 and 1053
- IAPMO Listed, File #2749

SMITH®
CUSTOMER DRIVEN SINCE 1926

JAY R. SMITH MFG. CO.®
MEMBER OF MORRIS GROUP INTERNATIONAL

2781 Gunter Park Dr. East • Montgomery, AL 36109-1405 • United States
Tel 334-277-8520 • www.jrsmith.com

WARNING: Cancer and Reproductive Harm - **www.P65Warnings.ca.gov**

SPM 0926 4/21

INNOVATIVE SPIRIT AND ENGINEERING FOUNDATION

"What sets us apart from competitors is our engineering and spirit. We have a 'can-do' spirit. If you ask us to do something, we will do it or figure out how to do it. That's the part our customers like, that's the part we like."

- Don Morris, President and CEO

MORRIS GROUP INTERNATIONAL®

BRANDS BUILT TO LAST!™

morrisgroup.co

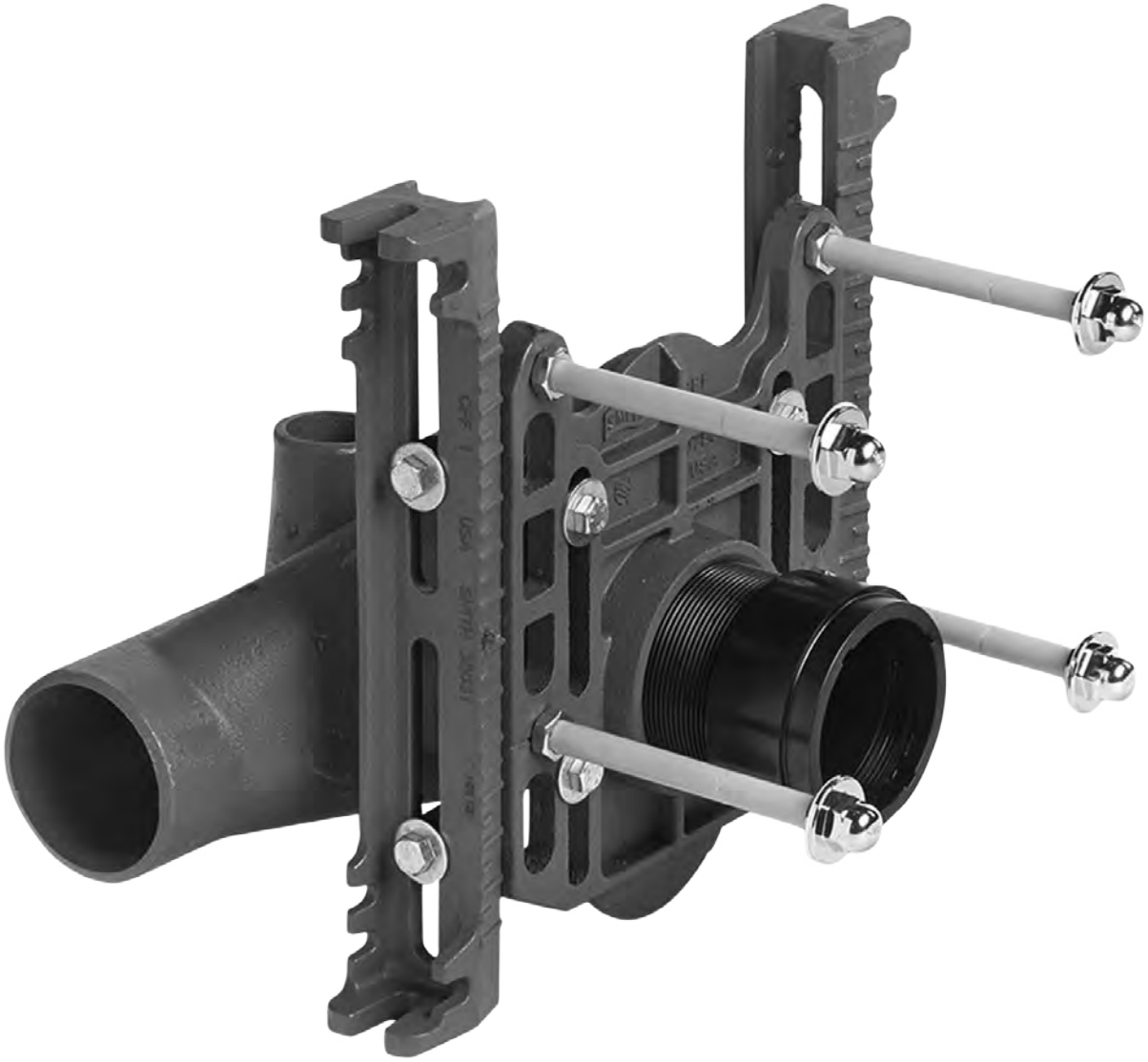

ORDERING GUIDELINES

0100-0600 SERIES

After identifying the proper options required to meet the engineering specification, place order as shown below:

Examples:

0211LY

Figure No.

Type of Fitting (Left Hand)

Type of Connection (NO-HUB)

0544DY

Figure No.

Type of Fitting (Double)

Type of Connection (NO-HUB)

WATER CLOSET SUPPORTS

ADJUSTABLE WATER CLOSET SUPPORTS WITH FITTINGS

Single - Vertical
with 2 Side Hub Inlets

Single - Vertical
Long Barrel

Double - Vertical
with 2 Side Hub Inlets

Single - Vertical
Long Barrel with 2 Side Hub Inlets

Double - Horizontal

Single - Horizontal

Single - Vertical

Fig. 0115-0250

"Linebacker"

HORIZONTAL - VERTICAL FITTINGS

WATER CLOSET SUPPORTS

COMPACT WATER CLOSET SUPPORTS WITH VERTICAL FITTINGS

Fig. 0400

OFFSET - CENTER LINE FITTINGS

LIGHT COMMERCIAL AND RESIDENTIAL WATER CLOSET SUPPORTS

STUD-MOUNT - FLOOR-MOUNT - ADAPTOR TYPE

FACE PLATE TYPE

Fig. 0600

LABOR SAVER® URINAL SUPPORTS

Fig. 0609-0617

URINAL SUPPORTS

Fig. 0629-0637

STACK FITTINGS

Fig. 0660

TECHNICAL DATA

TYPICAL SMITH ADJUSTABLE FIXTURE SUPPORT WITH WASTE FITTING

LINEBACKER®

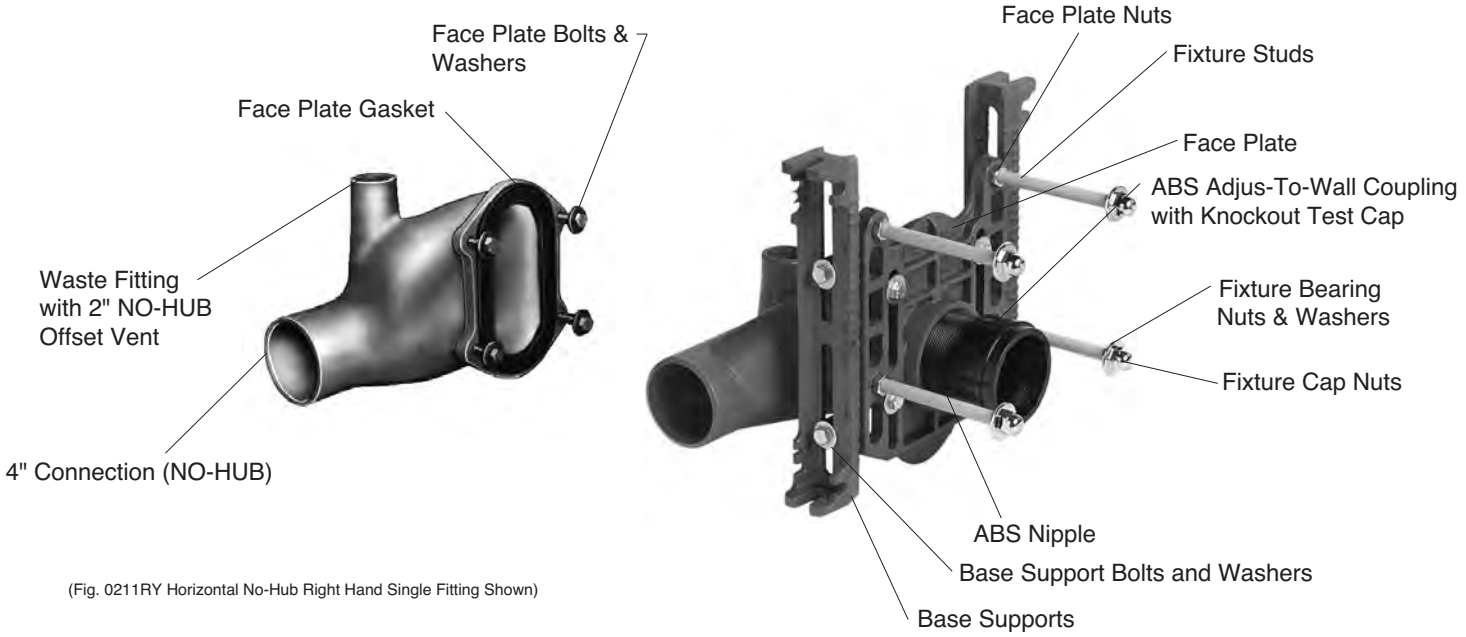

(Fig. 0211RY Horizontal No-Hub Right Hand Single Fitting Shown)

MATERIALS

PART	REGULARLY FURNISHED	OPTIONAL MATERIALS
Waste Fitting	Duco Cast Iron	Galvanized Cast Iron
Face Plate	Duco Cast Iron	Galvanized Cast Iron
Base Supports	Duco Cast Iron	Galvanized Cast Iron
Nipple	(ABS)	Cast Iron
Coupling	(ABS)	Cast Iron
Face Plate Gasket	Neoprene	
Bolts, Nuts & Washers	Zinc Plated Steel	
Fixture Studs	Zinc Plated Steel	
Fixture Washers	White Fibre	
Fixture Cap Nuts	Chrome Plated	
#90 Smith Seal	Non-Hardening Gasket Compound	
Fixture Stud Protector	Sleeve	
Coupling Protector	Polystyrene Sleeve	
Outlet Gasket	Neoprene	Impregnated Felt

NOTE: The water closet outlet gasket regularly furnished is made of molded neoprene and designed to fit water closet outlet dimensions and configurations shown in ASME Standard A112.19.2M, Figure 13B. If gasket is not found to be compatible to fixture due to nonconformance of said fixture to ASME A112.19.2M, then fixture manufacturer shall be consulted for a suitable gasket recommendation. Jay R. Smith Mfg. Co. assumes no liability for connections to fixtures which do not conform to these standards.

VARIATIONS

Style of fitting and type of connection are described with specific figure numbers on the following pages. Listed below are variations to the specific figure numbers available and page number reference for further explanation.

FITTINGS

Tapped Auxiliary Inlets (Suffix N)	Pg. 26
Vent Locations - Alternate	Pg. 26
Rear Anchor Foot Assembly (-M51)	Pg. 28

ADJUS-TO-WALL OUTLET CONNECTION

Nipple Lengths	Pg. 26
Minimum Dimension - 1 1/2"	Pg. 27

FACE PLATE

0100 Series HI-SET	Pg. 29
0100 Wide Pipe Chase (Suffix -M40)	Pg. 28
0200 Series 4" and 5" Rough	Pg. 25

OPTIONAL CLOSET OUTLET CONNECTIONS

Floor Mounted	
Back Outlet Type No. 2 & 2M	Pg. 27
M73	Pg. 27
M74	Pg. 27
M54	Pg. 28

BASE SUPPORT

High Base Support for Wheel Chair Patients (-M50)	Pg. 28, Pg. 29

MISCELLANEOUS ACCESSORIES

Supply Guide (Suffix -M12)	Pg. 28
Tiling Frame (Suffix -M13)	Pg. 28
Coupling Protector	Pg. 26
Water Closet Setting Gauge (M17)	Pg. 24

TECHNICAL DATA

Smith engineers have developed an unusually complete line of fixture supports for mounting all types of "off the floor" fixtures. Supports have been designed for water closets, urinals, lavatories, sinks, drinking fountains and many special purpose hospital, institutional and industrial plumbing fixtures.

DEFINITION

Fixtures which are wall mounted and have no external contact with the finished floor are classified as "off the floor plumbing fixtures." Fixtures so mounted are supported on concealed cast iron or steel supports (carriers). These supports are completely concealed in the wall, and support the load of the fixture by means of a suitable face plate and base support which is firmly anchored to the floor. Thus the load of the fixture is effectively taken off the wall and transmitted to the floor.

WATER CLOSET SUPPORT SYSTEMS

By incorporating a waste fitting which functions in conjunction with the support section, an entire system of "Combined Fixture Supports and Waste Fittings" has been developed. Thus, when mounting "off the floor" water closets, a complete unit is available which supports the fixture and includes a fitting which will tie into the drainage piping system. Fittings are available in vertical and horizontal patterns. Used in combinations, these fittings can satisfy waste and vent requirements of most systems.

Smith engineers have worked closely with plumbing designers, contractors and code officials to develop a system which meets their rigid demands and requirements. Particular attention was given in design so that---

- the engineer can select supports with fittings to meet all problems created by architectural, structural, code or esthetic requirements.
- the plumbing contractor can easily and economically install a rigid and code approved support with fitting, which will function for the lifetime of the building.
- the code official is assured that fittings used with supports are designed to meet code requirements relative to the proper sizing for drainage piping and venting.

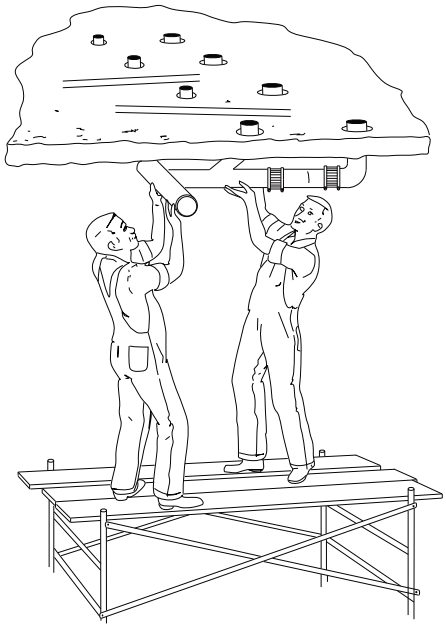

Fig. 1
INSTALLING PIPING FOR FLOOR MOUNTED FIXTURES

ADVANTAGES OF "OFF THE FLOOR" WATER CLOSETS OVER FLOOR MOUNTED

Design--The complete line of fittings available offers great latitude to architects and engineers when laying out the spacing, piping diagrams and wall space requirements for plumbing fixtures. The Smith system offers the engineer an option of designing a plumbing drainage system which is compact, yet extremely functional. The architect is assured that the system uses a minimum of floor space, with all the necessary components included.

Installation--Off the floor water closet systems can be installed more economically than conventional floor mounted systems. This comparison is particularly obvious in multi-story buildings which have batteries of water closets on each floor. The contractor is assured a simple, fast and efficient installation. Off the floor systems reduce costs for the following reasons:

1. Less sleeving. In most cases only one sleeve is required to take care of the vertical inlet fitting at the start of the horizontal run.
2. Since all the roughing is done on the floor and not in the ceiling below, no scaffolding, ladders or similar supports are required (Fig. 1).
3. The installer works on the floor (Fig. 2) and not in the ceiling below; thus, time is saved since working conditions are more favorable.
4. Because all the rough-in piping is on the floor above, "dropped ceilings" are not required; thus, ceiling space is saved. This enables building ceiling height to be lower, effectively saving overall construction costs.

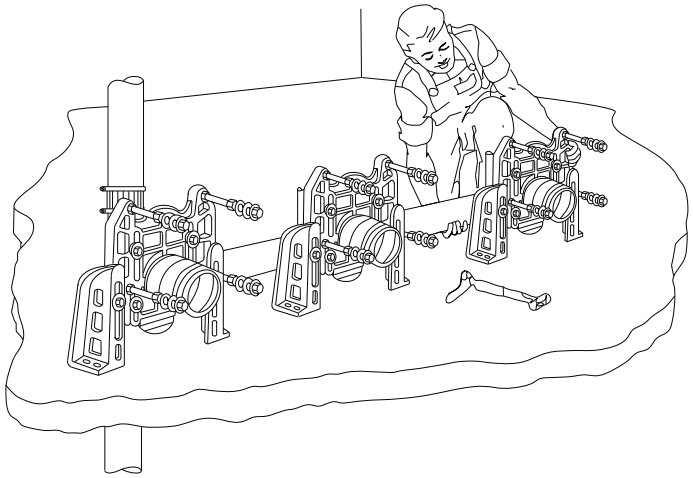

Fig. 2
INSTALLING PIPING FOR "OFF THE FLOOR" FIXTURES

Sanitation--After the building is turned over to the owners, cost for cleaning in the area under the "off the floor" water closets is considerably less than in similar areas which have floor mounted fixtures. A mop is easily passed under off the floor fixtures thoroughly cleaning the floor beneath as compared to the very difficult task of cleaning around and in back of floor mounted water closets. Cleaning costs are reduced, and the toilet room is maintained in a more sanitary condition.

TYPES OF WATER CLOSETS

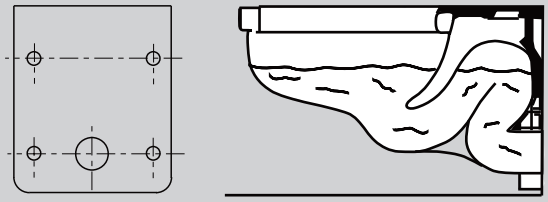

SIPHON JET

The siphon jet bowl is the most common because its action is relatively silent and economical in water usage. It operates by a jet of water directed through the trapway which quickly fills and starts the siphonic action immediately upon flushing. Its quiet action and large water surface, among other features, make it the most desirable bowl type. It is readily distinguished by the four bolt holes which receive the fixture support studs.

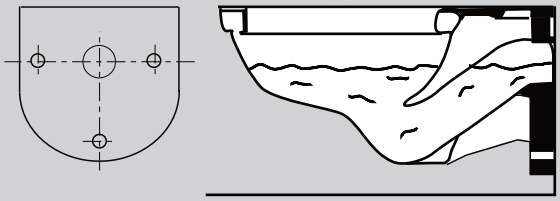

BLOWOUT

The blowout bowl is particularly adapted for public use as in airports, stadiums or plant washrooms. Its action is a driving one of high velocity. It is economical in water use and has a large water area and an unrestricted trapway. It is also more noisy than the siphon jet bowl because of its direct jet action. The blowout bowl is secured to the supports by three studs.

TYPICAL BATTERY INSTALLATIONS

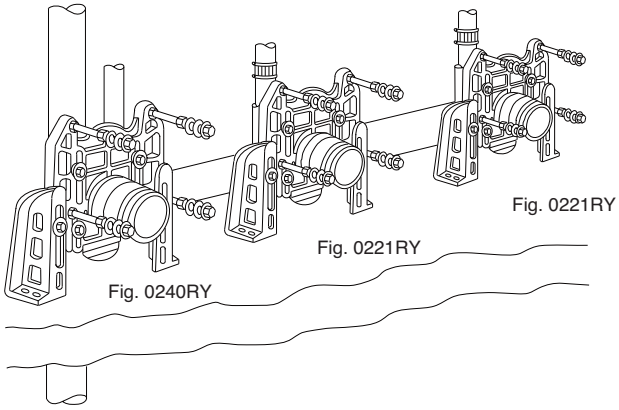

Battery of horizontal fittings with adjustable closet supports used in conjunction with a vertical fitting.

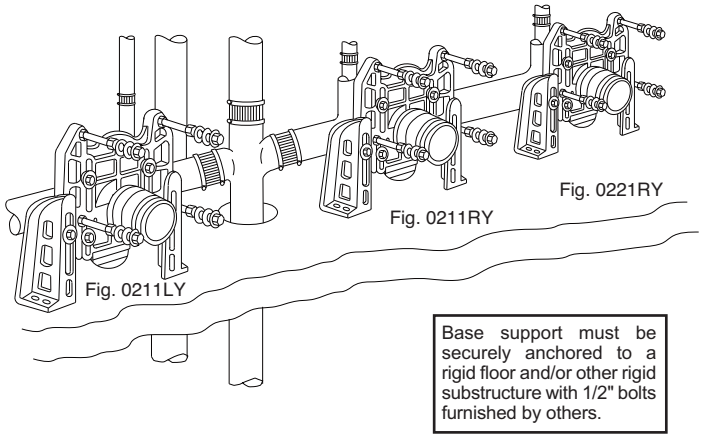

Battery of horizontal fittings with adjustable closet supports connected to a stack fitting.

The architects construction design and physical layout of the toilet room dictates the type of fittings that can be selected by the engineer for battery installations. The engineers drainage and vent system design must be in accordance with the local plumbing code in force.

SUFFIX -M17 WATER CLOSET SETTING GAUGE

Smith's lightweight cast aluminum water closet setting gauge is available for siphon jet bowls. The gauge has the same dimensions as the rear of the "off the floor" siphon jet bowl and is designed to eliminate costly trial and error test mounting and reduce the number of bowl "lifts" per day. The gauge locates the correct position of bearing washers and nuts, locates the correct protrusion of outlet coupling and support studs and checks the plumb of the wall. When the bowl is lifted, it's ready to be installed.

Features of the Closet Setting Gauge include:

1. Leveling pads to check horizontal alignment.
2. Four openings to check vertical and horizontal stud alignment.
3. Four extensions to determine stud length.
4. Vertical plumb line.
5. Four recesses in back of gauge for positioning of bearing washers.
6. Opening with coupling setting locations for outlet connection.

Slip gauge over studs and hold tight against wall. Check for plumb and level. Adjust bearing washers and nuts to fit tight against back of gauge. Make necessary adjustments for alignment of studs.

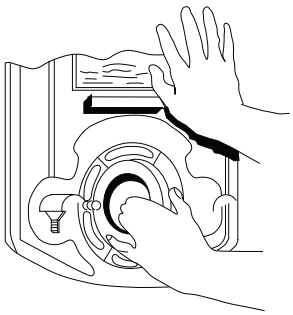

Hold gauge tight against wall and adjust outlet coupling flush with pad corresponding to closet horn depth.

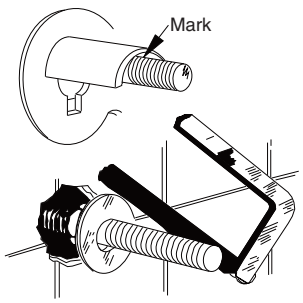

Hold gauge tight against bearing nuts and washers, and mark cut-off point of studs flush with gauge extensions. Remove gauge and cut off studs. Install bowl.

SELECTION OF VERTICAL FITTING WITH SIDE INLETS

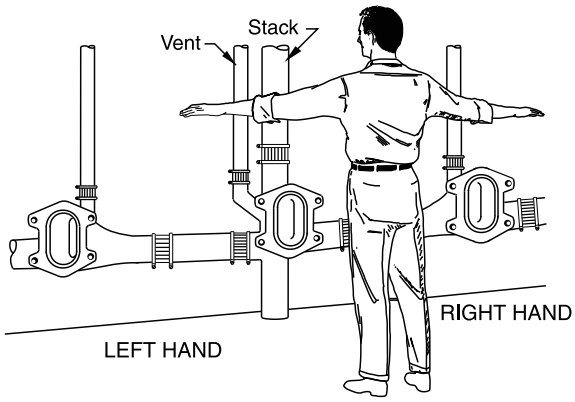

Selecting the proper vertical stack fitting is of prime importance since that fitting with side inlets is the start of the horizontal battery of fittings and supports. To determine left or right hand fitting, face the stack from the fixture side of the wall. If the inlet is to the left of the stack, it is a left hand fitting. If the inlet is on the right of the stack, it is a right hand fitting. The vent is always located on the same side as the inlet on a single inlet stack fitting.

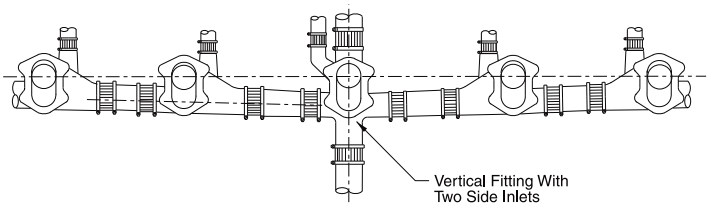

TYPICAL INSTALLATION

▲ SPACE REQUIREMENTS FOR SINGLE AND DOUBLE HORIZONTAL SUPPORTS

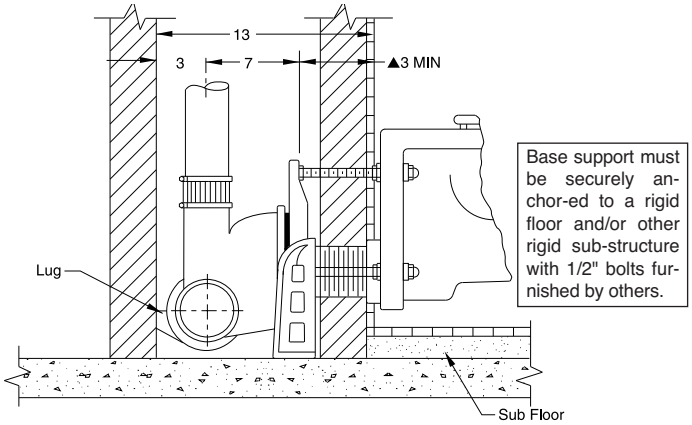

▲3" minimum shown is attained using Regularly Furnished ABS Nipple and Adjus-to-Wall Coupling.
Absolute Minimum of 1 1/2" is available using short butt end nipple, less Adjus-to-Wall Coupling.

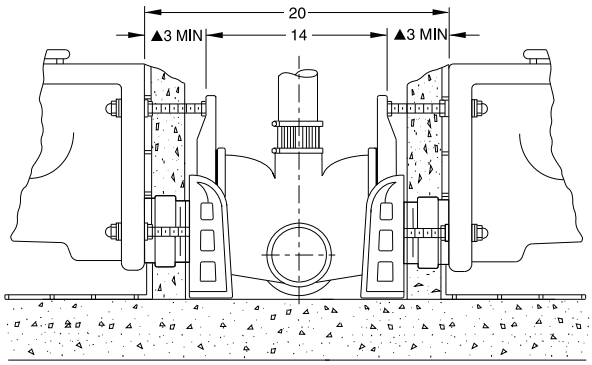

Shown is the minimum pipe space required for a single and double horizontal support.

DETERMINING LEFT OR RIGHT HAND HORIZONTAL FITTINGS

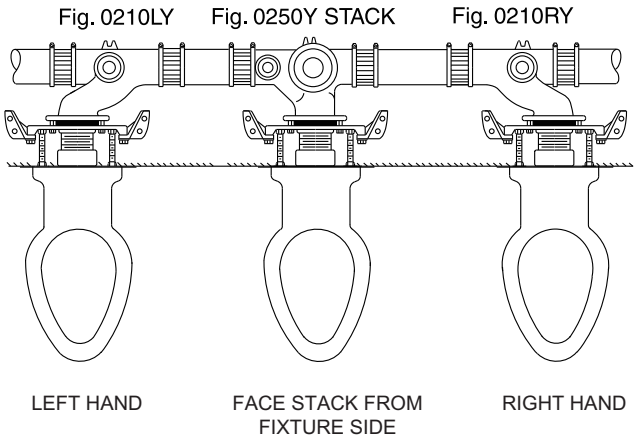

Left or right hand fitting is always determined by facing the stack from the fixture side of the room. Closet fittings to the left of the stack are left hand fittings. Closet fittings to the right of the stack are right hand fittings.

FACE PLATE SELECTION

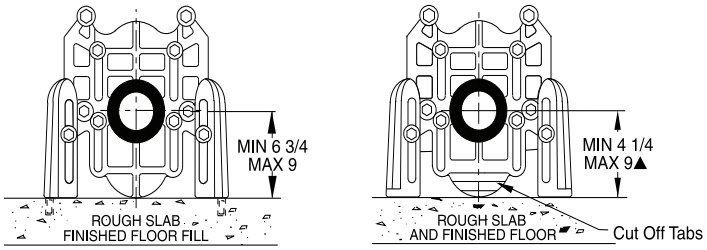

Fig. 0100 Fig. 0200

0200 Series 4" or 5" rough-in face plate available.

Fig. 0200 SERIES SHALLOW ROUGH-IN TYPE

The face plate is designed for one-pour construction, consisting of a single slab with fill and 1/4" finished material.
▲ Cut-off grooves provided on 0200 Series face plates. This allows removal of tabs to accommodate 5" or 4 1/4" minimum roughs.

ROUGHING OF VERTICAL ADJUSTABLE FITTINGS WITH SIDE INLETS

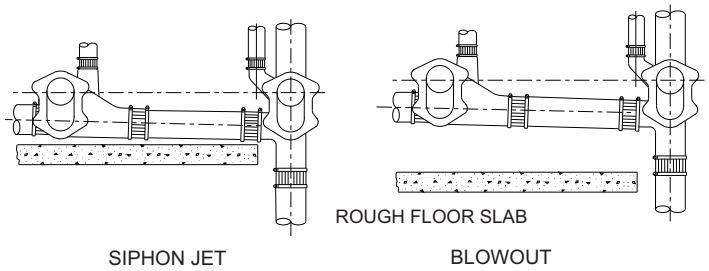

Siphon Jet--The location of the side inlet is determined by the center of the closet outlet to the finished floor plus the thickness of the finished floor materials. This will determine where the inlet will be in relation to the rough floor. For shallow roughing (0200 Series) or one-pour slab construction, the side inlet should always set on the slab floor.

Blowout--The location of the side inlet should be set in the lowest position from center line of the closet outlet to center line of side inlet.

VENT LOCATIONS ON VERTICAL ADJUSTABLE FITTING

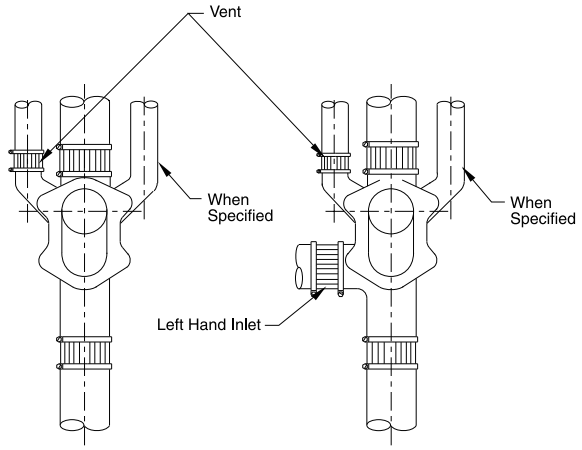

All Smith vertical adjustable fittings without side inlets are regularly furnished with a 2" vent on the left side. This vent can be located on the right side when specified. Smith vertical adjustable fittings with side inlet are regularly furnished with 2" vent on the same side as the inlet. The vent can be located on the side opposite the side inlet when specified.

AUXILIARY INLET CONNECTION SUFFIX -N15 SUFFIX -N2

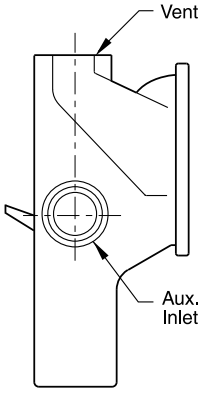

NOTE: Vent and auxiliary inlet, are always located on same side (unless otherwise specified).

All vertical adjustable fittings can be supplied with either a -N15 (1 1/2") or -N2 (2") tapped inlet, either side. To indicate auxiliary connection, add Suffix -N to the figure number and specify location and size desired. The auxiliary inlet is ideal for receiving waste from lavatories, urinals, etc., where local code will permit. When using soil pipe, the female iron pipe thread can be converted to hub with Smith Fig. 2645 adaptor, or to NO-HUB with Smith Fig. 2646Y adaptor.

ⓒ DIMENSION - ADJUS-TO-WALL TYPE OUTLET CONNECTION

The Smith Adjus-to-Wall outlet connection provides adjustment at the face of the wall at the time the fixture is set; thus, compensating for wall construction variations. The ⓒ dimension is measured from the front of the face plate to the face of the finished wall. To properly determine the length of nipple required, deduct 1" from the ⓒ dimension. The Adjus-to-Wall coupling will provide 1/2" horizontal adjustment in either direction with the coupling extended 5/16" past face of the finished wall.

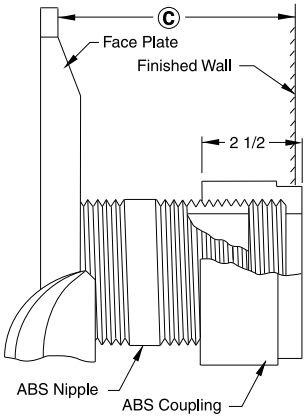

NIPPLE LENGTH	ⓒ MIN	ⓒ MAX
2 1/2	2 1/4	3 1/4
*3 1/4	3	4
*8 1/4	8	9
10	9 3/4	10 3/4
12	11 3/4	12 3/4
15	14 3/4	15 3/4
18	17 3/4	18 3/4

*ABS (Regularly Furnished) other lengths PVC.

NOTE: When nipple lengths between 3 1/4" and 8 1/4" are specified, the 8 1/4" nipple will be supplied and must be cut to length by others.

COUPLING PROTECTOR

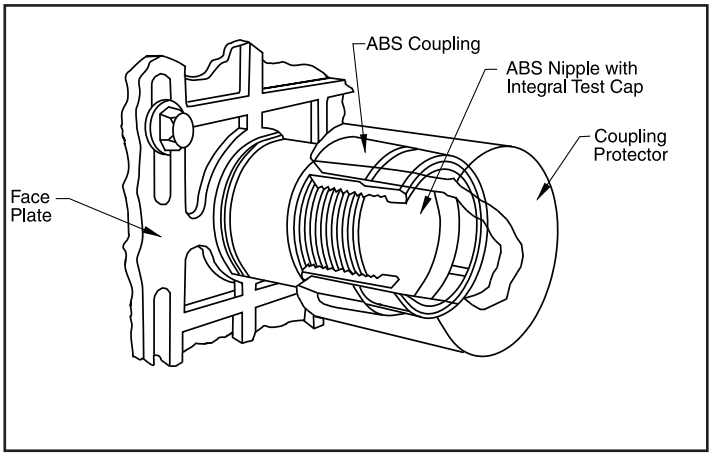

Every Smith Adjus-to-Wall outlet connection is furnished with a polystyrene coupling protector. This protector covers the outlet connection during the wall construction and later permits easy adjustment of the coupling to the finished wall.

RECOMMENDED SETTING OF CLOSET OUTLET CONNECTION AND FIXTURE STUDS

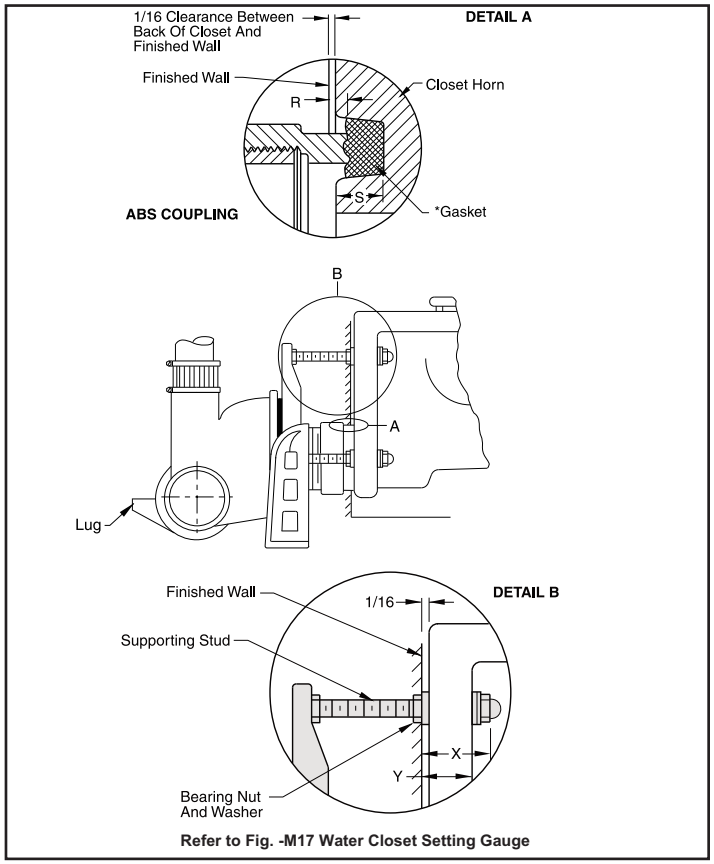

Manufacturers have slight differences in the depth of the closet horn and flange thickness of their closets. Usually the fixture support closet connection should extend 5/16" beyond face of finished wall (Dimension "R") and the fixture studs 2 1/4" (dimension "X"). For exact dimensions, please use the formulas below:

DETAIL A S + 1/16" - D = R
- R = Distance coupling should extend beyond finished wall.
- S = Depth closet horn
- 1/16" = Distance closet is to set away from finished wall.
- *D = 1/2" for felt gasket and 3/8" for neoprene gasket.

NOTE: When the fixture is installed, closet gasket must be compressed sufficiently to assure a gas and water tight seal.

DETAIL B Y + 1/16" + 9/16" = X
- X = Distance supporting stud should extend beyond finished wall.
- Y = Thickness of closet wall flange.
- 1/16" = Distance closet is to set away from finished wall.

NOTE: Bearing nuts and washers must be set to take full loading from the fixture allowing 1/16" clearance between fixture and wall.

OPTIONAL CLOSET OUTLET CONNECTIONS

For use with floor mounted back outlet closets. Refer to previous page for proper dimension and coupling adjustment. Nipple lengths available are also listed.

NOTE: Coupling should extend beyond the wall adequately to apply sufficient and uniform pressure on the gasket to produce a watertight seal. It is the installer's responsibility to make this final adjustment.

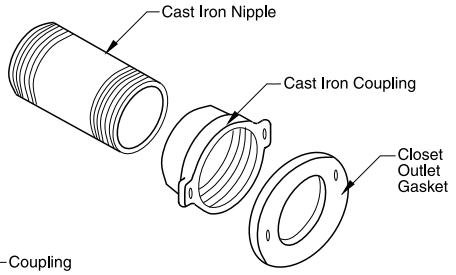

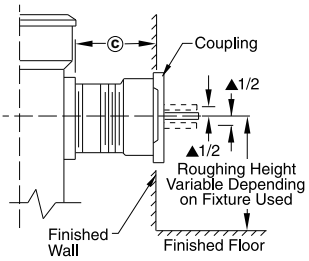

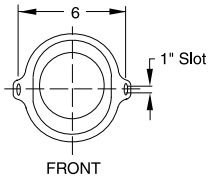

▲**NOTE:** The 4" adjustable coupling is provided with vertical slotted ears which permit a 1/2" adjustment up or down for variation in finished floor height.

TYPE NO. 2 CLOSET OUTLET CONNECTION

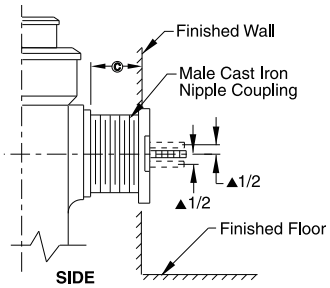

The type 2M outlet connection is used with floor mounted back outlet closets. The 2M connection is an integral nipple/coupling whose length is specified by the Ⓒ dimension. The 2M can accommodate a smaller Ⓒ dimension than the type 2 connection.

Ⓒ MIN	Ⓒ MAX
1	3

▲**NOTE:** The 4" adjustable coupling is provided with vertical slotted ears which permit a 1/2" adjustment up or down for variation in finished floor height.

TYPE 2M CLOSET OUTLET CONNECTION

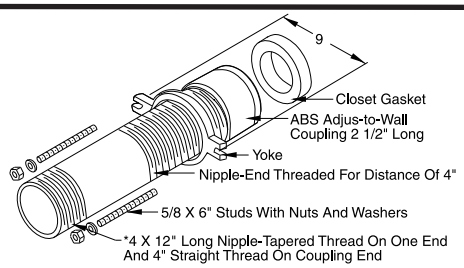

TYPE -M73 CLOSET OUTLET CONNECTOR FOR USE WITH STAINLESS STEEL FIXTURES

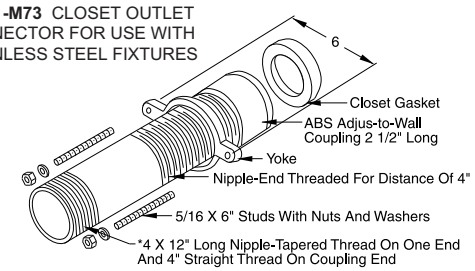

TYPE -M74 CLOSET OUTLET CONNECTOR FOR USE WITH STAINLESS STEEL FIXTURES

***NOTE:** See previous page for Nipple lengths available.

COMPACT FIXTURE SUPPORTS

Smith compact fixture supports with waste fittings are designed specifically for installation where non-adjustable vertical fittings are suitable for construction requirements and minimum pipe space is of prime consideration. These supports are available in both offset and center line waste type.

The offset waste type features an absolute minimum center to back dimension and is arranged with vertical vent connection making it suitable for multi-story installation.

The center line waste type does not have the vent connection and is limited to single story installations. The extension of the vertical waste line is the stack vent.

Both types are available for siphon jet or blowout closet applications.

▲MINIMUM SPACE REQUIREMENTS FOR COMPACT FIXTURE SUPPORTS

DOUBLE COMPACT OFFSET FITTING
Fig. 0410DY shown installed in a one-pour type floor construction. Dimensions apply to 4" size only.

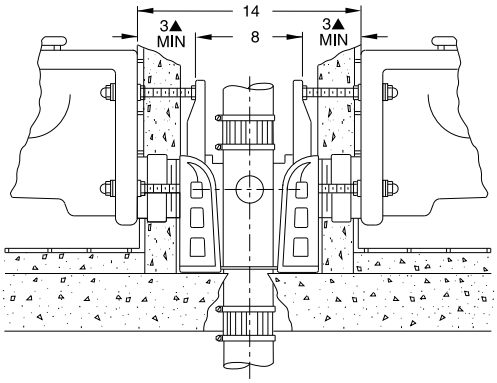

SINGLE COMPACT OFFSET FITTING
Fig. 0410RY shown installed in a one-pour type floor construction. Dimensions apply to 4" size only.

*3" WHEN USED WITH HUB & SPIGOT FITTING.

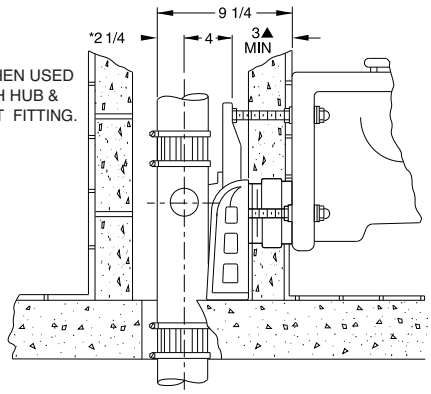

Base support must be securely anchored to a rigid floor and/or other rigid sub-structure with (4) 1/2" bolts furnished by others.

▲3" Minimum shown is attained using Regularly Furnished ABS Nipple and Adjust-to-Wall Coupling.

Absolute Minimum of 1 1/2" is available using short butt end nipple, less Adjus-to-Wall Coupling.

DETERMINING LEFT OR RIGHT HAND COMPACT FITTINGS

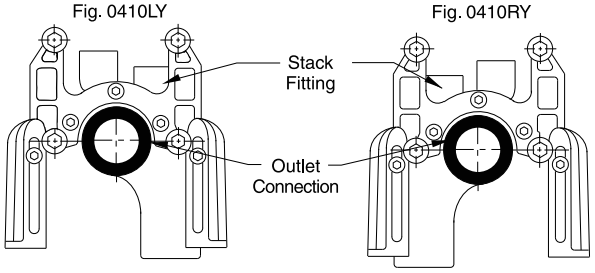

Face wall looking into closet outlet connection. If connection is on the left side of the vertical stack, it is a left hand support. If on the right side, it is a right hand support.

BASE SUPPORT ADJUSTMENT

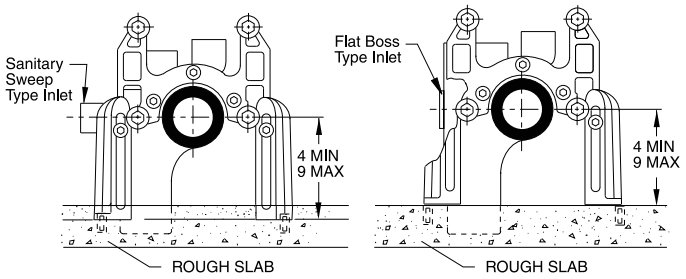

Adjustment limitations are shown above for both one and two-pour construction.

All compact series fixture supports are available with auxiliary inlets. The offset series are available with either a sanitary sweep type inlet or a flat boss type connection. The center line waste type supports are available with only a flat boss type inlet connection. Both inlet types are available in 1 1/4, 1 1/2 or 2" thread. A 2" caulk and no-hub connections are available for the sanitary sweep type inlet.

OPTIONAL ACCESSORIES FOR WATER CLOSET SUPPORTS

SUFFIX -M12 EXPOSED FLUSH VALVE SUPPLY SUPPORT

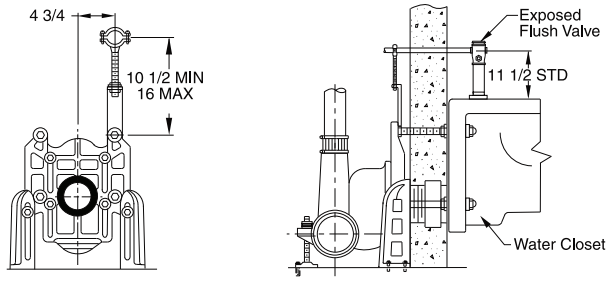

Provides support and alignment for the supply pipe to an exposed flush valve. Available for either blowout or siphon jet fixture supports; must be specified for either 1" copper tube or 1" iron pipe.

SUFFIX -M13 TILING FRAME

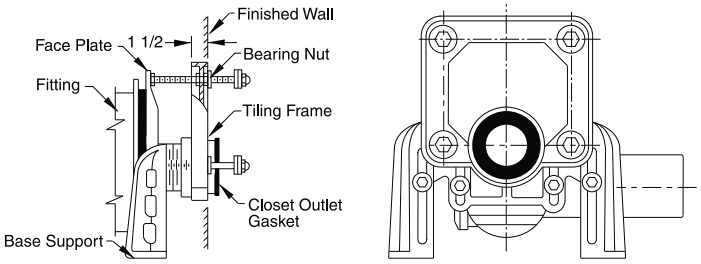

The purpose of this frame is to provide a rim for a flat even surface for the tiler to work to when he is applying the finished wall tile. The end result is an even finish around the frame, thus eliminating any irregular edges and uneven surfaces which can otherwise interfere with the installation of the water closet. Available for siphon jet closets only.

SUFFIX -M40 WATER CLOSET SUPPORT FOR WIDE PIPE CHASE

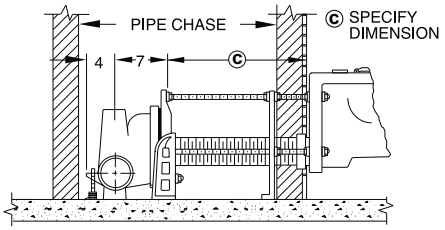

When the Ⓒ dimension exceeds 7", the -M40 Wide Pipe Chase Support should be used. This accessory provides a set of feet directly behind the wall to give extra rigidity where it's most needed. An alignment yoke is furnished to ensure proper alignment of the nipple. For double (back-to-back) installations, specify whether the -M40 accessory is required on one or both sides. When ordering, the Ⓒ dimension must be specified. The -M40 may be used with any vertical or horizontal fixture support.

SUFFIX -M50 ELEVATED SUPPORT BASE

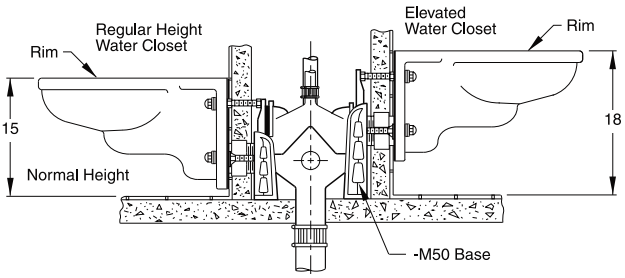

For double (back-to-back) installations which require a single elevated water closet, the -M50 variation may be used with all regular Smith adjustable or single compact supports. Illustrated is a regular double vertical fitting showing siphon jet closets set at normal height and 3" higher on the opposite side to accommodate the wheelchair user. The -M50 is particularly adaptable to hospital or nursing home applications where a single water closet is installed on the stack at each floor. Not recommended for battery installations.

SUFFIX -M51 ANCHOR FOOT

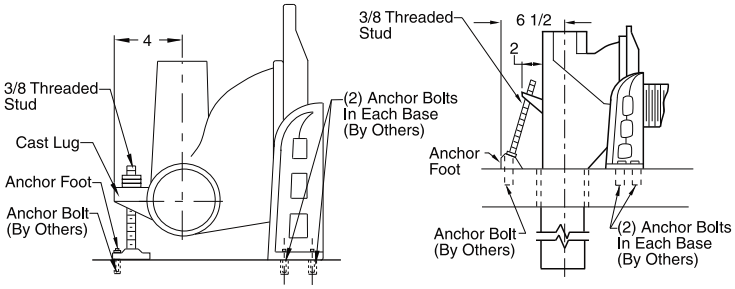

HORIZONTAL SUPPORT VERTICAL SUPPORT

Provides back anchor support for any single horizontal or vertical fixture support. Consists of a 3/8" stud and a cast iron anchor foot. Anchor bolt to concrete must be furnished by others.

SUFFIX -M54 FACE PLATE WITH SIDE MOUNTED BASE SUPPORT ASSEMBLY

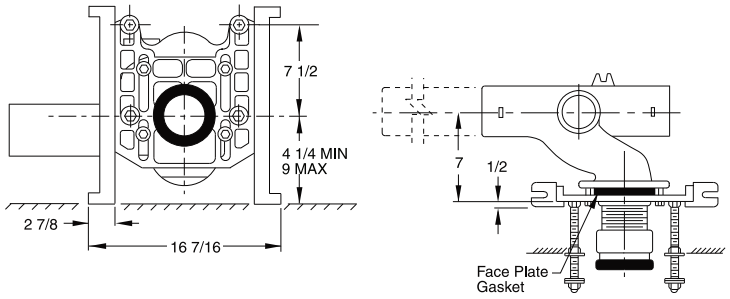

FRONT VIEW TOP VIEW

SUFFIX -M58 FACE PLATE WITH ADJUSTABLE NIPPLE AND "O" RING

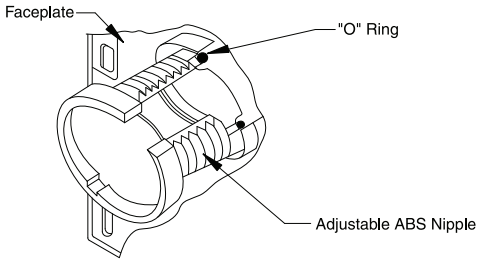

The -M58 suffix is furnished with the 0200 series faceplate machined for the "O" ring seal and the adjustable 10" ABS nipple.

CONCEALED FLUSH VALVES

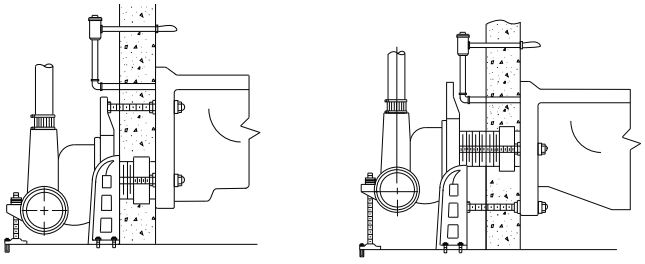

SIPHON JET BLOWOUT

For most siphon jet water closets with concealed flush valves, the supply pipe enters the rear of the water closet above the top of the face plate without interference. (**NOTE:** There is an exception-Crane water closets have a much lower roughing for the inlet; therefore the face plate must be set behind the supply pipe or from 4 1/2" to 6 1/2" back of the rough wall.) Concealed flush valve piping in all cases does not interfere with the vent connection of the fitting.

A concealed flush valve will not clear the face plate when used with a <u>blowout water closet support</u>. Therefore 4 1/2" to 6 1/2" is required from back of wall to face plate to permit the installation of the concealed flush valve piping.

HI-SET ELEVATED ADJUSTABLE FIXTURE SUPPORTS

FACILITIES FOR WHEELCHAIR USERS

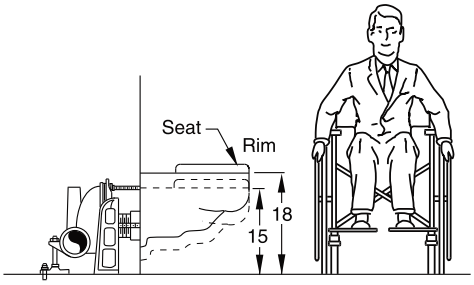

Industrial, commercial and government offices are utilizing the talents of the physically impaired. Design considerations for wheelchair users must be incorporated in modern buildings. Convenient entrance and exit must be assured. Inside the building, toilet facilities for wheelchair users are priority areas for special design.

Smith engineers, alert to these trends, have designed the HI-SET fixture support series so that fixtures for wheelchair users can be mounted without special design by the engineer or extra work by the plumbing contractor.

Installation of raised water closets using conventional supports and fittings is normally very difficult.

Smith designs include:

Horizontal adjustable fittings with elevated inlet flange in left or right hand and double (back-to-back). This design permits the elevated water closet to be roughed at any position in the battery.

Special vertical adjustable fittings with hub inlet located so that elevated water closets can be installed directly on the stack without interfering with a battery of conventional height water closets.

Special extra-high base supports of the strong LINEBACKER® design to accommodate the high rough fixture.

The need for elevated water closets is not limited to wheelchair users only, or to commercial offices. The HI-SET elevated installation aids physically impaired persons in hospitals, institutions, nursing homes and homes for the aged.

SHALLOW ROUGH CONSTRUCTION FOR HI-SET FIXTURE SUPPORT

Illustrated (top) is a regular vertical inlet fitting (Fig. 0240RY) located at the stack with a new HI-SET horizontal fitting (Fig. 0115RY) located at the end of the battery.

Illustrated (bottom) is a HI-SET vertical inlet fitting with lowered inlet hub (Fig. 0175RY) located at the stack in conjunction with regular horizontal fittings.

For unusual architectural layouts, consult Smith's Sales Engineering Department for recommendations.

NOTE: ASME Standards indicate 17" to 19" seat height for a handicapped bowl. The 19" seat height can be obtained using a regular support system. Specify Suffix -M50 when ordering.

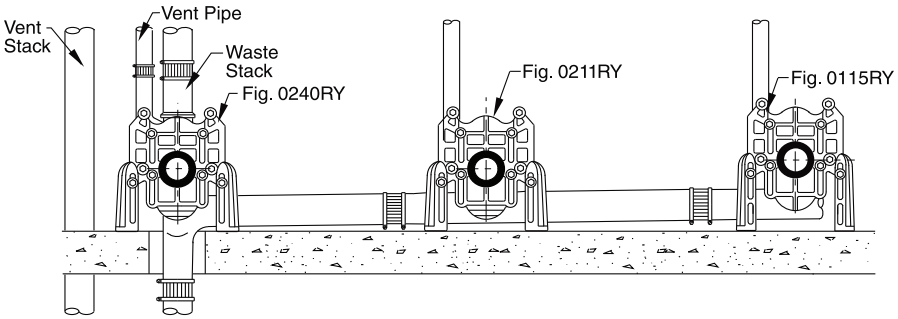

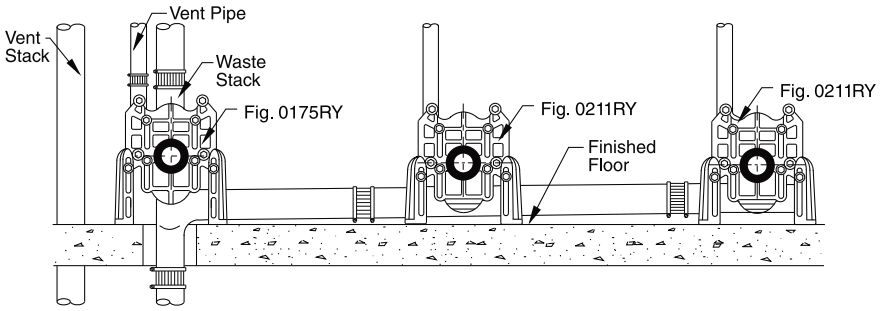

FIG. 0115, 0115Y SERIES HORIZONTAL FITTINGS FOR ELEVATED SIPHON JET WATER CLOSETS FOR WHEELCHAIR USERS DEEP ROUGH-IN TYPE

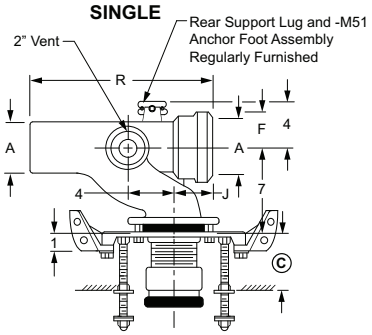

Fig. 0115R
TOP VIEW

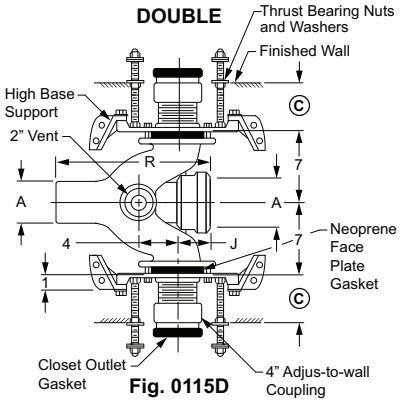

Fig. 0115D
TOP VIEW

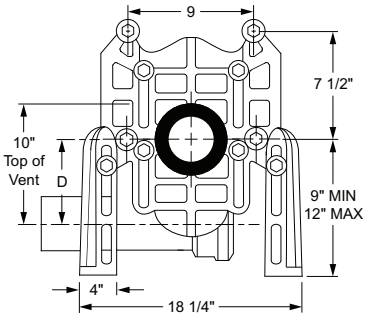

FRONT VIEW

OUTLET TYPE	FIGURE NO.	TYPE OF FITTING	A PIPE SIZE †04"	D MIN	D MAX	F	J	R	APPROX. WT. LBS.
CAULK	0115L	Single–Left Hand Hi-set	**2,039.00**	4 5/8"	8 5/8"	3"	3 3/8"	16"	70
	0115R	Single–Right Hand Hi-set	**2,039.00**	4 5/8"	8 5/8"	3"	3 3/8"	16"	70
	0115D	Double–Hi-set	**3,816.00**	4 5/8"	8 5/8"	3"	3 3/8"	16"	134
NO-HUB	0115LY	Single–Left Hand Hi-set	**2,039.00**	4 5/8"	8 5/8"	2 1/4"	4"	14"	70
	0115RY	Single–Right Hand Hi-set	**2,039.00**	4 5/8"	8 5/8"	2 1/4"	4"	14"	70
	0115DY	Double–Hi-set	**3,816.00**	4 5/8"	8 5/8"	2 1/4"	4"	14"	134

© dimension = 4" (regularly furnished) consisting of nipple and Adjus-to-Wall coupling permitting adjustment from 3" min. to 4" max.

The water closet gasket regularly furnished is made of molded neoprene and designed to fit water closet outlet dimensions and configurations shown in ANSI Standard A112.19.2M, Figure 13B. If gasket is not found to be compatible to fixture due to nonconformance of said fixture to ANSI A112.19.2M, then fixture manufacturer shall be consulted for a suitable gasket recommendation. Jay R. Smith assumes no liability for connections to fixtures which do not conform to these standards.

ADD FOR:

	SINGLE	DOUBLE
Cast Iron or PVC Outlet Nipple & Steel Studs over 12" (**PER INCH**)	**129.00**	**258.00**
Type 2 Female Coupling	**54.00**	**108.00**
Type 2M Male Coupling	**54.00**	**108.00**
M13 Finishing Frame	**104.00**	**208.00**

FIG. 0175, 0185 SERIES VERTICAL FITTINGS WITH SIDE INLET FOR ELEVATED SIPHON JET WATER CLOSETS FOR WHEELCHAIR USERS DEEP ROUGH-IN TYPE

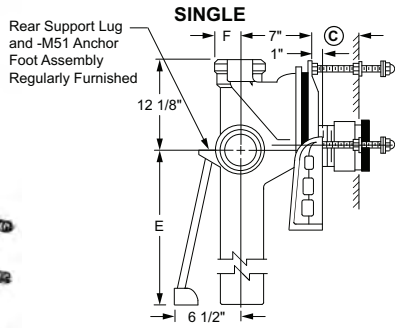

Fig. 0175L - 0185
SIDE VIEW

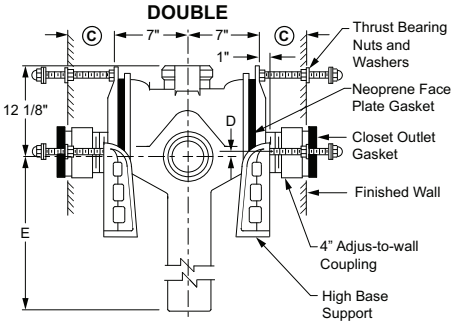

Fig. 0175D - 0185D
SIDE VIEW

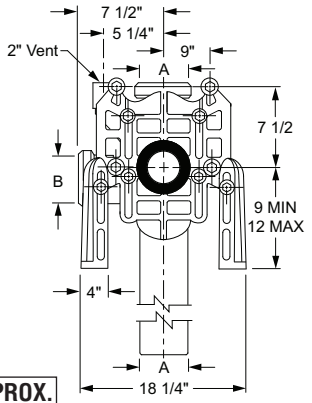

Fig. 0175L - 0185
FRONT VIEW

FIGURE NO.		TYPE OF FITTING	A PIPE SIZE †04"	B	D MIN	D MAX	E	F	APPROX. WT. LBS.
CAULK	0175L	Single–Left Hand Hi-set with Side Inlet	**4,331.00**	04"	4 3/4"	8 3/4"	26 3/4"	3"	110
	0175R	Single–Right Hand Hi-set with Side Inlet	**4,331.00**	04"	4 3/4"	8 3/4"	26 3/4"	3"	110
	0175D	Double–Hi-set with Side Inlet	**6,239.00**	04"	4 3/4"	8 3/4"	26 3/4"	3"	111
	0185	Single–Hi-set with Two Side Inlets	**4,722.00**	04"	4 3/4"	8 3/4"			50
	0185D	Double–Hi-set with Two Side Inlets	**6,508.00**	04"	4 3/4"	8 3/4"			141
NO-HUB	0175LY	Single–Left Hand Hi-set with Side Inlet	**4,331.00**	04"	4 3/4"	8 3/4"	10 7/8"	2 1/4"	110
	0175RY	Single–Right Hand Hi-set with Side Inlet	**4,331.00**	04"	4 3/4"	8 3/4"	10 7/8"	2 1/4"	110
	0175DY	Double–Hi-set with Side Inlet	**6,239.00**	04"	4 3/4"	8 3/4"	10 7/8"	2 1/4"	111
	0185Y	Single–Hi-set with Two Side Inlets	**4,722.00**	04"	4 3/4"	8 3/4"			50
	0185DY	Double–Hi-set with Two Side Inlets	**6,508.00**	04"	4 3/4"	8 3/4"			141

© dimension = 4" (regularly furnished) consisting of nipple and Adjus-to-Wall coupling permitting adjustment from 3" min. to 4" max.

ADD FOR:

	SINGLE	DOUBLE
Cast Iron or PVC Outlet Nipple & Steel Studs over 12" (**PER INCH**)	**129.00**	**258.00**
Type 2 Female Coupling	**54.00**	**108.00**
Type 2M Male Coupling	**54.00**	**108.00**
M13 Finishing Frame	**104.00**	**208.00**

The water closet gasket regularly furnished is made of molded neoprene and designed to fit water closet outlet dimensions and configurations shown in ANSI Standard A112.19.2M, Figure 13B. If gasket is not found to be compatible to fixture due to nonconformance of said fixture to ANSI A112.19.2M, then fixture manufacturer shall be consulted for a suitable gasket recommendation. Jay R. Smith assumes no liability for connections to fixtures which do not conform to these standards.

NOTE: Service weight regularly furnished on fittings above.
NOTE: Always specify fixture manufacturer's model name and number.

†REGULARLY FURNISHED

FIXTURE SUPPORTS

FIG. 0208Y HORIZONTAL FITTINGS FOR SIPHON JET WATER CLOSETS SHALLOW ROUGH-IN TYPE

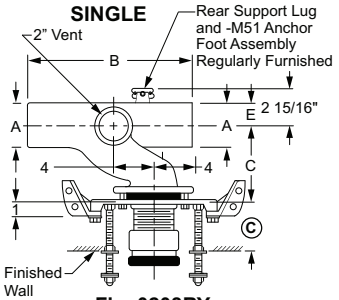

Fig. 0208RY
TOP VIEW

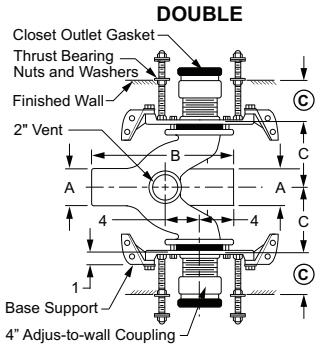

Fig. 0208DY
TOP VIEW

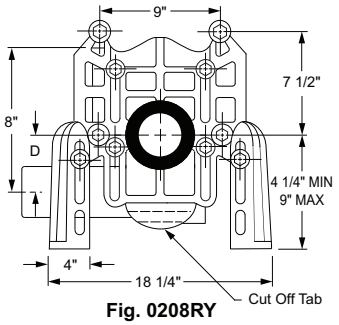

Fig. 0208RY
FRONT VIEW

FIGURE NO.		TYPE OF FITTING	A PIPE SIZE 03"	B	C	D MIN	D MAX	E
NO-HUB	0208LY	Single–Left Hand	**1,863.00**	14"	5 5/16"	5/8"	3 3/8"	1 11/16"
	0208RY	Single–Right Hand	**1,863.00**	14"	5 5/16"	5/8"	3 3/8"	1 11/16"
	0208DY	Double	**3,439.00**	14"	5 5/16"	5/8"	3 3/8"	1 11/16"

© dimension = 4" (regularly furnished) consisting of nipple and Adjus-to-Wall coupling permitting adjustment from 3" min. to 4" max.

	ADD FOR: SINGLE	DOUBLE
Cast Iron or PVC Outlet Nipple & Steel Studs over 12" (**PER INCH**)	**129.00**	**258.00**
Type 2 Female Coupling	**54.00**	**108.00**
Type 2M Male Coupling	**54.00**	**108.00**
M13 Finishing Frame	**104.00**	**208.00**

The water closet gasket regularly furnished is made of molded neoprene and designed to fit water closet outlet dimensions and configurations shown in ANSI Standard A112.19.2M, Figure 13B. If gasket is not found to be compatible to fixture due to nonconformance of said fixture to ANSI A112.19.2M, then fixture manufacturer shall be consulted for a suitable gasket recommendation. Jay R. Smith assumes no liability for connections to fixtures which do not conform to these standards.

FIG. 0209Y, 0219Y SERIES HORIZONTAL FITTINGS FOR SIPHON JET WATER CLOSETS

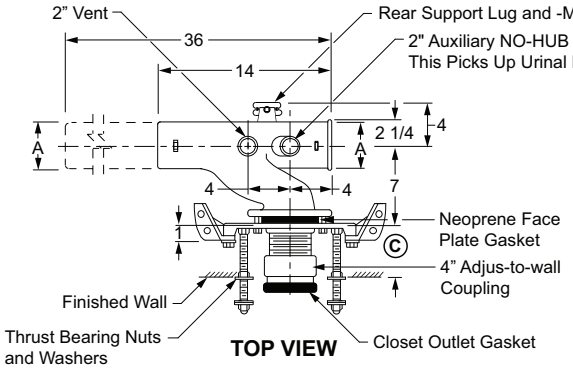

TOP VIEW

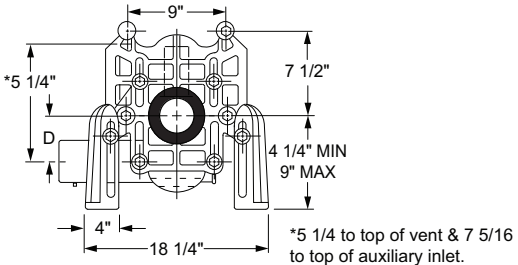

Fig. 0209Y
FRONT VIEW

OUTLET TYPE	FIGURE NO.	TYPE OF FITTING	A PIPE SIZE †04"	D MIN	D MAX	APPROX. WT. LBS.
NO-HUB	0209LY	Single–Left Hand w/Vent and 2" Aux No-Hub Inlet	**2,586.00**	5/8"	3 3/8"	61
	0209RY	Single–Right Hand w/Vent and 2" Aux No-Hub Inlet	**2,586.00**	5/8"	3 3/8"	61
	0219LY	Single–Left Hand Long Barrel with Two Vents and 2" Aux No-Hub Inlet	**3,127.00**	5/8"	3 3/8"	78
	0219RY	Single–Right Hand Long Barrel with Two Vents and 2" Aux No-Hub Inlet	**3,127.00**	5/8"	3 3/8"	78

© dimension = 4" (regularly furnished) consisting of nipple and Adjus-to-Wall coupling permitting adjustment from 3" min. to 4" max.

	ADD FOR: SINGLE	DOUBLE
Cast Iron or PVC Outlet Nipple & Steel Studs over 12" (**PER INCH**)	**129.00**	**258.00**
Type 2 Female Coupling	**54.00**	**108.00**
Type 2M Male Coupling	**54.00**	**108.00**
M13 Finishing Frame	**104.00**	**208.00**

The water closet gasket regularly furnished is made of molded neoprene and designed to fit water closet outlet dimensions and configurations shown in ANSI Standard A112.19.2M, Figure 13B. If gasket is not found to be compatible to fixture due to nonconformance of said fixture to ANSI A112.19.2M, then fixture manufacturer shall be consulted for a suitable gasket recommendation. Jay R. Smith assumes no liability for connections to fixtures which do not conform to these standards.

NOTE: Service weight regularly furnished on fittings above.
NOTE: Always specify fixture manufacturer's model name and number.

†REGULARLY FURNISHED

FIG. 0211Y, 0221Y HORIZONTAL FITTINGS FOR SIPHON JET WATER CLOSETS SHALLOW ROUGH-IN TYPE

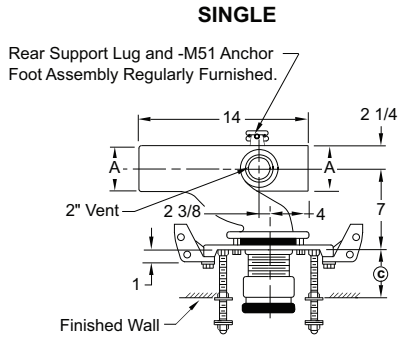

Fig. 0211RY
TOP VIEW

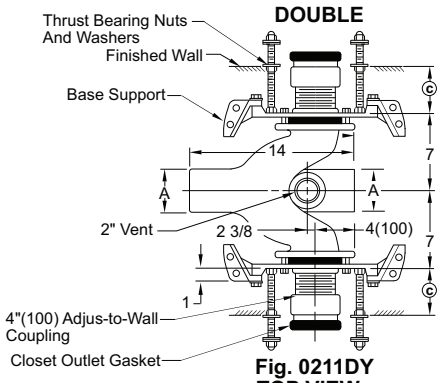

Fig. 0211DY
TOP VIEW

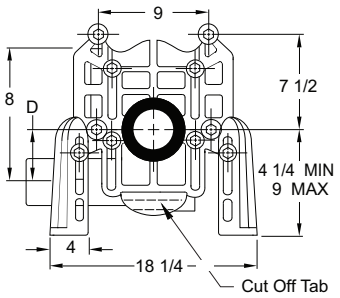

FRONT VIEW

OUTLET TYPE	FIGURE NO.	TYPE OF FITTING	A PIPE SIZE †04"	D MIN	D MAX
NO-HUB	0211LY	Single–Left Hand	**2,039.00**	5/8"	3 3/8"
	0211RY	Single–Right Hand	**2,039.00**	5/8"	3 3/8"
	0211DY	Double	**3,816.00**	5/8"	3 3/8"
	0221LY	Single–Left Hand Long Barrel	**2,754.00**	5/8"	3 3/8"
	0221RY	Single–Right Hand Long Barrel	**2,754.00**	5/8"	3"
	0221DY	Double Long Barrel	**4,792.00**	5/8"	3 3/8"

	ADD FOR: SINGLE	ADD FOR: DOUBLE
Cast Iron or PVC Outlet Nipple & Steel Studs over 12" (**PER INCH**)	**129.00**	**258.00**
Type 2 Female Coupling	**54.00**	**108.00**
Type 2M Male Coupling	**54.00**	**108.00**
M13 Finishing Frame	**104.00**	**208.00**

© dimension = 4" (regularly furnished) consisting of nipple and Adjus-to-Wall coupling permitting adjustment from 3" min. to 4" max.

The water closet gasket regularly furnished is made of molded neoprene and designed to fit water closet outlet dimensions and configurations shown in ANSI Standard A112.19.2M, Figure 13B. If gasket is not found to be compatible to fixture due to nonconformance of said fixture to ANSI A112.19.2M, then fixture manufacturer shall be consulted for a suitable gasket recommendation. Jay R. Smith assumes no liability for connections to fixtures which do not conform to these standards.

FIG. 0211Y-M54, 0221Y-M54, 0211Y-M58/M54, 0221Y-M58/M54 HORIZONTAL FITTINGS FOR SIPHON JET WATER CLOSETS SHALLOW ROUGH-IN TYPE

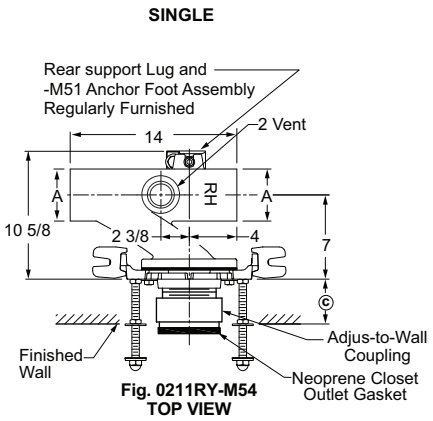

Fig. 0211RY-M54
TOP VIEW

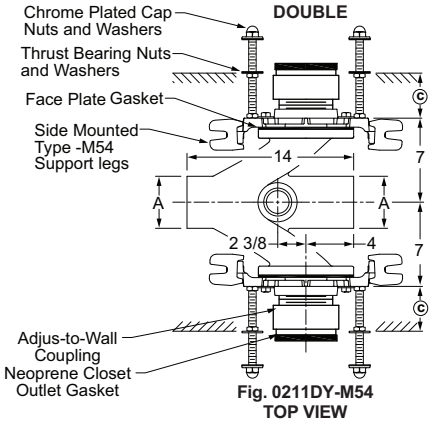

Fig. 0211DY-M54
TOP VIEW

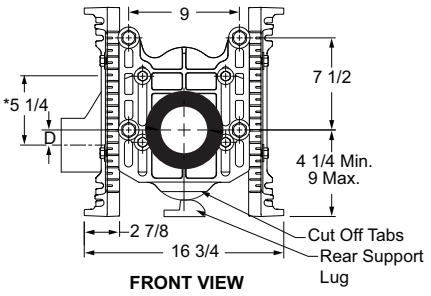

FRONT VIEW

OUTLET TYPE	FIGURE NO.	TYPE OF FITTING	A PIPE SIZE †04"	D MIN	D MAX
NO-HUB	0211LY-M54	Single–Left Hand	**2,039.00**	5/8"	3 3/8"
	0211RY-M54	Single–Right Hand	**2,039.00**	5/8"	3 3/8"
	0211DY-M54	Double	**3,816.00**	5/8"	3 3/8"
	0221LY-M54	Single–Left Hand Long Barrel	**2,754.00**	5/8"	3 3/8"
	0221RY-M54	Single–Right Hand Long Barrel	**2,754.00**	5/8"	3"
	0221DY-M54	Double Long Barrel	**4,792.00**	5/8"	3 3/8"
NO-HUB	0211LY-M58/54	Single–Left Hand	**2,039.00**	5/8"	3 3/8"
	0211RY-M58/54	Single–Right Hand	**2,039.00**	5/8"	3 3/8"
	0211DY-M58/54	Double	**3,816.00**	5/8"	3 3/8"
	0221LY-M58/54	Single–Left Hand Long Barrel	**2,754.00**	5/8"	3 3/8"
	0221RY-M58/54	Single–Right Hand Long Barrel	**2,754.00**	5/8"	3 3/8"
	0221DY-M58/54	Double Long Barrel	**4,792.00**	5/8"	3 3/8"

	ADD FOR: SINGLE	ADD FOR: DOUBLE
Cast Iron or PVC Outlet Nipple & Steel Studs over 12" (**PER INCH**)	**129.00**	**258.00**
Type 2 Female Coupling	**54.00**	**108.00**
Type 2M Male Coupling	**54.00**	**108.00**
M13 Finishing Frame	**104.00**	**208.00**

© dimension = 4" (regularly furnished) consisting of nipple and Adjus-to-Wall coupling permitting adjustment from 3" min. to 4" max.

The water closet gasket regularly furnished is made of molded neoprene and designed to fit water closet outlet dimensions and configurations shown in ANSI Standard A112.19.2M, Figure 13B. If gasket is not found to be compatible to fixture due to nonconformance of said fixture to ANSI A112.19.2M, then fixture manufacturer shall be consulted for a suitable gasket recommendation. Jay R. Smith assumes no liability for connections to fixtures which do not conform to these standards.

NOTE: Service weight regularly furnished on fittings above.
NOTE: Always specify fixture manufacturer's model name and number.

†REGULARLY FURNISHED

FIXTURE SUPPORTS

FIG. 0211Y-M54-XK, 0221Y-M54-XK HORIZONTAL FITTINGS FOR SIPHON JET WATER CLOSETS BARIATRIC DUTY - 1000 LBS.

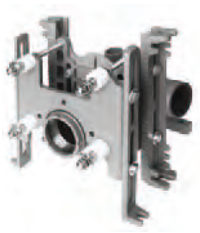

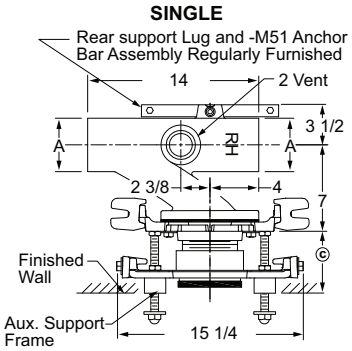

Fig. 0211RY-M54-XK
TOP VIEW

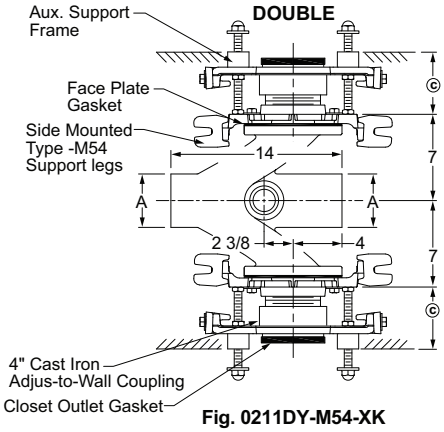

Fig. 0211DY-M54-XK
TOP VIEW

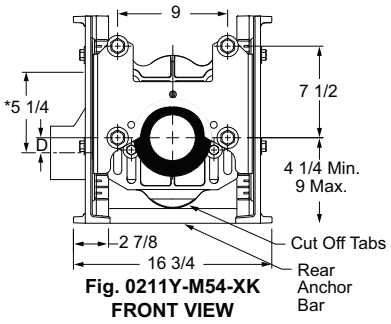

Fig. 0211Y-M54-XK
FRONT VIEW

OUTLET TYPE	FIGURE NO.	TYPE OF FITTING	A PIPE SIZE †04"	D MIN	D MAX	APPROX. WT. LBS.
NO-HUB	0211LY-M54-XK	Single–Left Hand	**5,966.00**	5/8"	3 3/8"	55
	0211RY-M54-XK	Single–Right Hand	**5,966.00**	5/8"	3 3/8"	55
	0211DY-M54-XK	Double	**11,509.00**	5/8"	3 3/8"	100
	0221LY-M54-XK	Single–Left Hand Long Barrel	**6,681.00**	5/8"	3 1/8"	74
	0221RY-M54-XK	Single–Right Hand Long Barrel	**6,681.00**	5/8"	3 1/8"	74
	0221DY-M54-XK	Double Long Barrel	**12,485.00**	5/8"	3 1/8"	119

ADD FOR:

	SINGLE	DOUBLE
Cast Iron or PVC Outlet Nipple & Steel Studs over 12" (**PER INCH**)	**129.00**	**258.00**
Type 2 Female Coupling	**54.00**	**108.00**
Type 2M Male Coupling	**54.00**	**108.00**
M13 Finishing Frame	**104.00**	**208.00**

© dimension = 4 1/4" to 5 1/4" with regularly furnished 4 1/2" cast iron nipple and Adjus-to-Wall coupling.

*Dimension is from centerline of barrel to top of vent.

NOTE: Base support must be securely anchored to floor with 1/2" anchors able to withstand a pull-out force of 500 lbs. The rear anchor bar must be securely anchored to floor with 1/2" anchors able to withstand a pull-out force of 1000 lbs. Pull-out forces are calculated values, no safety factor has been applied.

Jay R. Smith 0211Y or 0221Y-M54-XK complies with and/or exceeds all requirements of ASME A112.6.1M up to 1000 lbs.

FIG. 0211Y-M54-XX, 0221Y-M54-XX HORIZONTAL FITTINGS FOR SIPHON JET WATER CLOSETS EXTRA HEAVY DUTY - 750 LBS.

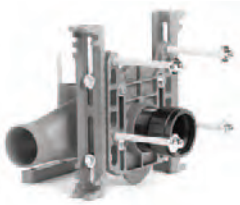

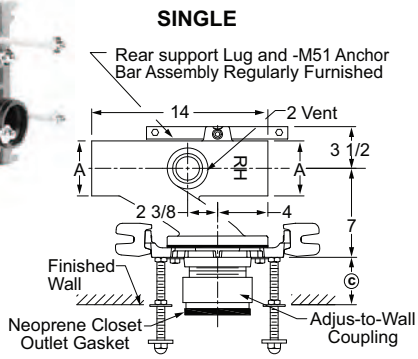

Fig. 0211RY-M54-XX
TOP VIEW

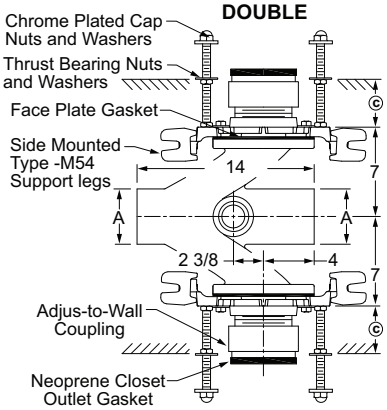

Fig. 0211DY-M54-XX
TOP VIEW

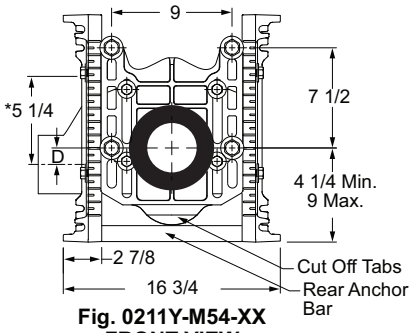

Fig. 0211Y-M54-XX
FRONT VIEW

OUTLET TYPE	FIGURE NO.	TYPE OF FITTING	A PIPE SIZE †04"	D MIN	D MAX
NO-HUB	0211LY-M54-XX	Single–Left Hand	**4,220.00**	5/8"	3 3/8"
	0211RY-M54-XX	Single–Right Hand	**4,220.00**	5/8"	3 3/8"
	0211DY-M54-XX	Double	**4,220.00**	5/8"	3 3/8"
	0221LY-M54-XX	Single–Left Hand Long Barrel	**4,935.00**	5/8"	3 1/8"
	0221RY-M54-XX	Single–Right Hand Long Barrel	**4,935.00**	5/8"	3 1/8"
	0221DY-M54-XX	Double Long Barrel	**4,935.00**	5/8"	3 1/8"

ADD FOR:

	SINGLE	DOUBLE
Cast Iron or PVC Outlet Nipple & Steel Studs over 12" (**PER INCH**)	**129.00**	**258.00**
Type 2 Female Coupling	**54.00**	**108.00**
Type 2M Male Coupling	**54.00**	**108.00**
M13 Finishing Frame	**104.00**	**208.00**

© dimension = 4" (regularly furnished) consisting of nipple and Adjus-to-Wall coupling permitting adjustment from 3" min. to 4" max. Longer nipples are available, specify © dimension.

NOTE: Base support must be securely anchored to floor with 1/2" anchors able to withstand a pull-out force of 500 lbs. The rear anchor bar must be securely anchored to floor with 1/2" anchors able to withstand a pull-out force of 1000 lbs. Pull-out forces are calculated values, no safety factor has been applied.

*Dimension to top of vent.

Jay R. Smith 0211Y or 0221Y-M54-XX complies with and/or exceeds all requirements of ASME A112.6.1M up to 750 lbs.

NOTE: Service weight regularly furnished on fittings above.
NOTE: Always specify fixture manufacturer's model name and number.

†REGULARLY FURNISHED

FIG. 0211Y-M58/54-XK, 0221Y-M58/54-XK HORIZONTAL FITTINGS FOR SIPHON JET WATER CLOSETS BARIATRIC DUTY - 1000 LBS.

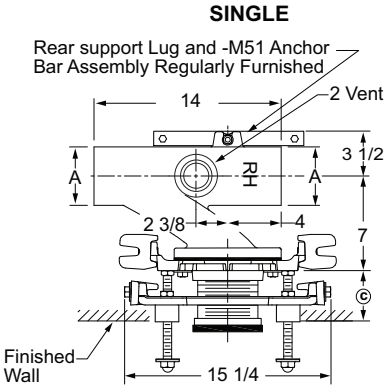

Fig. 0211RY-M58-M54-XK
TOP VIEW

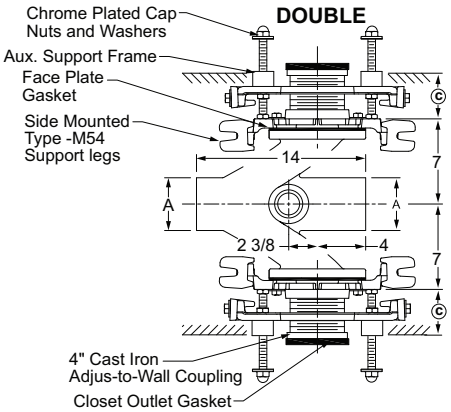

Fig. 0211DY-M58-M54-XK
TOP VIEW

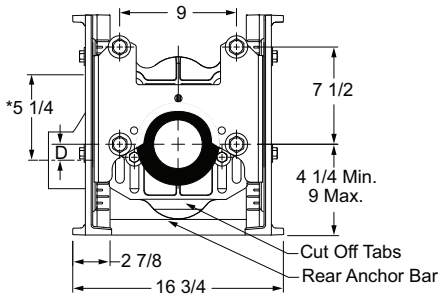

Fig. 0211Y-M58-M54-XK
FRONT VIEW

OUTLET TYPE	FIGURE NO.	TYPE OF FITTING	A PIPE SIZE †04"	D MIN	D MAX
NO-HUB	0211LY-M58/54-XK	Single–Left Hand	**5,966.00**	5/8"	3 3/8"
	0211RY-M58/54-XK	Single–Right Hand	**5,966.00**	5/8"	3 3/8"
	0211DY-M58/54-XK	Double	**11,509.00**	5/8"	3 3/8"
	0221LY-M58/54-XK	Single–Left Hand Long Barrel	**6,681.00**	5/8"	3 1/8"
	0221RY-M58/54-XK	Single–Right Hand Long Barrel	**6,681.00**	5/8"	3 1/8"
	0221DY-M58/54-XK	Double Long Barrel	**12,485.00**	5/8"	3 1/8"

ADD FOR:	SINGLE	DOUBLE
Cast Iron or PVC Outlet Nipple & Steel Studs over 12" (**PER INCH**)	**129.00**	**258.00**
Type 2 Female Coupling	**54.00**	**108.00**
Type 2M Male Coupling	**54.00**	**108.00**
M13 Finishing Frame	**104.00**	**208.00**

© dimension = 4 1/4" to 4 3/4" with regularly furnished 5 1/4" cast iron nipple and Adjus-to-Wall coupling.

*Dimension is from centerline of barrel to top of vent.

NOTE: Base support must be securely anchored to floor with 1/2" anchors able to withstand a pull-out force of 500 lbs. The rear anchor bar must be securely anchored to floor with 1/2" anchors able to withstand a pull-out force of 1000 lbs. Pull-out forces are calculated values, no safety factor has been applied.

Jay R. Smith 0211Y or 0221Y-M58/54-XK complies with and/or exceeds all requirements of ASME A112.6.1M up to 1000 lbs.

FIG. 0211Y-M58/54-XX, 0221Y-M58/54-XX HORIZONTAL FITTINGS FOR SIPHON JET WATER CLOSETS EXTRA HEAVY DUTY - 750 LBS.

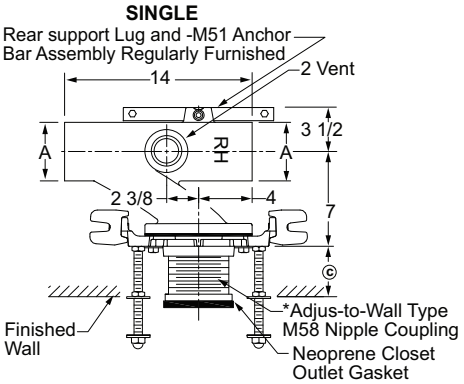

Fig. 0211YRY-M58/M54-XX
TOP VIEW

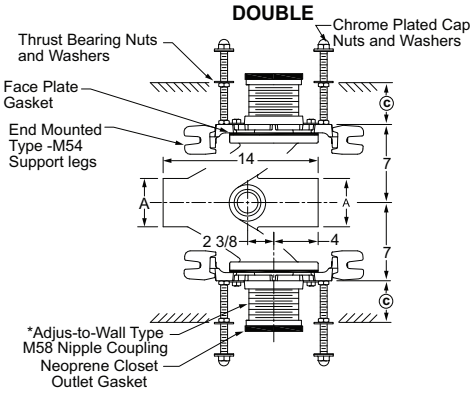

Fig. 0211DY-M58/M54-XX
TOP VIEW

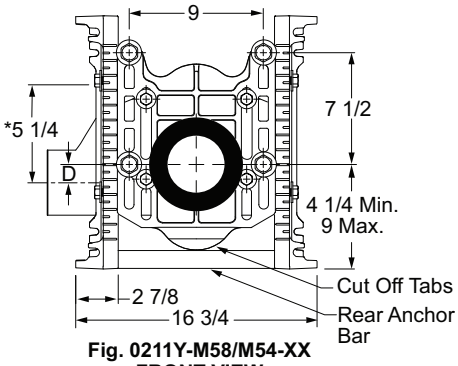

Fig. 0211Y-M58/M54-XX
FRONT VIEW

OUTLET TYPE	FIGURE NO.	TYPE OF FITTING	A PIPE SIZE †04"	D MIN	D MAX
NO-HUB	0211LY-M58/54-XX	Single–Left Hand	**4,220.00**	5/8"	3 3/8"
	0211RY-M58/54-XX	Single–Right Hand	**4,220.00**	5/8"	3 3/8"
	0211DY-M58/54-XX	Double	**4,220.00**	5/8"	3 3/8"
	0221LY-M58/54-XX	Single–Left Hand Long Barrel	**4,935.00**	5/8"	3 1/8"
	0221RY-M58/54-XX	Single–Right Hand Long Barrel	**4,935.00**	5/8"	3 1/8"
	0221DY-M58/54-XX	Double Long Barrel	**4,935.00**	5/8"	3 1/8"

ADD FOR:	SINGLE	DOUBLE
Cast Iron or PVC Outlet Nipple & Steel Studs over 12" (**PER INCH**)	**129.00**	**258.00**
Type 2 Female Coupling	**54.00**	**108.00**
Type 2M Male Coupling	**54.00**	**108.00**
M13 Finishing Frame	**104.00**	**208.00**

Jay R. Smith 0211Y or 0221Y-M58/54-XX complies with and/or exceeds all requirements of ASME A112.6.1M up to 750 lbs.

© dimension = 4" (regularly furnished) consisting of nipple and Adjus-to-Wall coupling permitting adjustment from 3" min. to 4" max.

NOTE: Base support must be securely anchored to floor with 1/2" anchors able to withstand a pull-out force of 500 lbs. The rear anchor bar must be securely anchored to floor with 1/2" anchors able to withstand a pull-out force of 1000 lbs. Pull-out forces are calculated values, no safety factor has been applied.

NOTE: When nipple lengths between 3 1/4" and 9 3/4" are specified, the 10" nipple will be supplied. The threaded end of nipple must be cut to specified length by others.

LENGTH	MIN ©	MAX
10	8 3/4"	9 3/4"

NOTE: Service weight regularly furnished on fittings above.
NOTE: Always specify fixture manufacturer's model name and number.

†REGULARLY FURNISHED

FIG. 0230, 0260 VERTICAL FITTINGS FOR SIPHON JET WATER CLOSETS SHALLOW ROUGH-IN TYPE

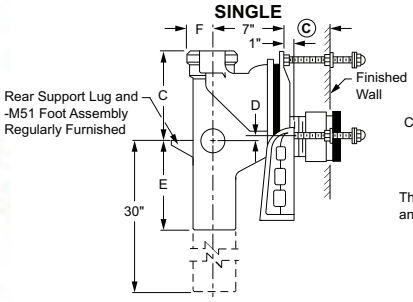

Fig. 0230
SIDE VIEW

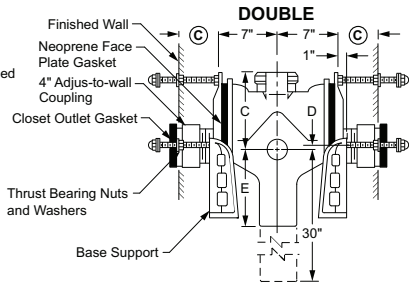

Fig. 0230D
SIDE VIEW

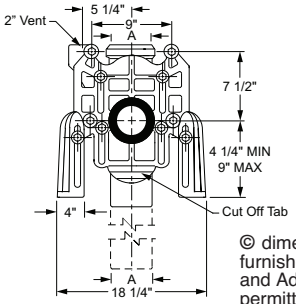

Fig. 0230
FRONT VIEW

© dimension = 4" (regularly furnished) consisting of nipple and Adjus-to-Wall coupling permitting adjustment from 3" min. to 4" max.

OUTLET TYPE	FIGURE NO.	TYPE OF FITTING	A PIPE SIZE †04"	05"	06"	C	D MIN	D MAX	E	F	APPROX. WT. LBS.
CAULK	0230	Single	**2,419.00**			9"	1 1/2"	4 1/4"	10"	3"	98
	0230D	Double	**4,189.00**			9"	1 1/2"	4 1/4"	10"	3"	135
	0230	Single		**3,045.00**		11 1/2"	1 1/2"	4 1/4"	11 1/2"	3 1/2"	98
	0230D	Double		**4,845.00**		11 1/2"	1 1/2"	4 1/4"	11 1/2"	3 1/2"	135
	0230	Single			**3,577.00**	11 1/2"	1 1/2"	4 1/4"	11 1/2"	4"	98
	0230D	Double			**5,348.00**	11 1/2"	1 1/2"	4 1/4"	11 1/2"	4"	135
			†04" X 04"	**05" X 04" OR 05"**	**06" X 04"**						
CAULK	0260	Single Long Barrel	**3,632.00**			9"	1 1/2"	4 1/4"	10"	3"	117
	0260D	Double Long Barrel	**5,408.00**			9"	1 1/2"	4 1/4"	10"	3"	154
	0260	Single Long Barrel		**6,720.00**		11 1/2"	1 1/2"	4 1/4"	11 1/2"	3 1/2"	117
	0260D	Double Long Barrel		**8,514.00**		11 1/2"	1 1/2"	4 1/4"	11 1/2"	3 1/2"	154
	0260	Single Long Barrel			**7,894.00**	11 1/2"	1 1/2"	4 1/4"	11 1/2"	4"	117
	0260D	Double Long Barrel			**9,665.00**	11 1/2"	1 1/2"	4 1/4"	11 1/2"	4"	154

NOTE: Base support must be securely anchored to floor (with four 1/2" bolts provided by contractor).

NOTE: 1 1/2" or 2" NPT Inlet available. Add suffix -N.

ADD FOR:

	SINGLE	DOUBLE
Cast Iron or PVC Outlet Nipple & Steel Studs over 12" (**PER INCH**)	**129.00**	**258.00**
Type 2 Female Coupling	**54.00**	**108.00**
Type 2M Male Coupling	**54.00**	**108.00**
M13 Finishing Frame	**104.00**	**208.00**

The water closet gasket regularly furnished is made of molded neoprene and designed to fit water closet outlet dimensions and configurations shown in ANSI Standard A112.19.2M, Figure 13B. If gasket is not found to be compatible to fixture due to nonconformance of said fixture to ANSI A112.19.2M, then fixture manufacturer shall be consulted for a suitable gasket recommendation. Jay R. Smith assumes no liability for connections to fixtures which do not conform to these standards.

FIG. 0230Y VERTICAL FITTINGS FOR SIPHON JET WATER CLOSETS SHALLOW ROUGH-IN TYPE

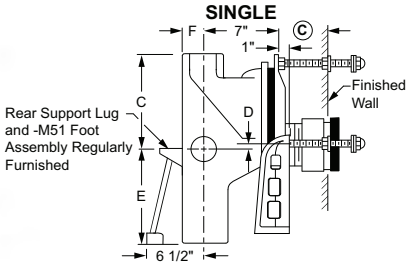

Fig. 0230Y
SIDE VIEW

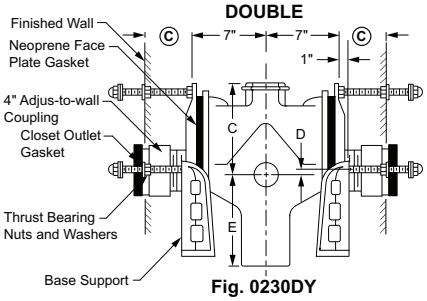

Fig. 0230DY
SIDE VIEW

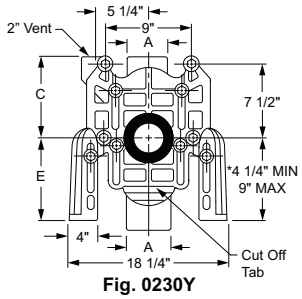

Fig. 0230Y
FRONT VIEW

OUTLET TYPE	FIGURE NO.	TYPE OF FITTING	A PIPE SIZE †04"	05"	06"	C	D MIN	D MAX	E	F	APPROX. WT. LBS.
NO-HUB	0230Y	Single	**2,315.00**			9"	1 1/2"	4 1/4"	14"	2 1/4"	76
	0230DY	Double	**4,089.00**			9"	1 1/2"	4 1/4"	14"	2 1/4"	122
	0230Y	Single		**2,881.00**		11 1/2"	1 1/2"	4 1/4"	11 1/2"	2 3/4"	76
	0230DY	Double		**4,597.00**		11 1/2"	1 1/2"	4 1/4"	11 1/2"	2 3/4"	122
	0230Y	Single			**3,357.00**	11 1/2"	1 1/2"	4 1/4"	11 1/2"	3 1/4"	76
	0230DY	Double			**5,076.00**	11 1/2"	1 1/2"	4 1/4"	11 1/2"	3 1/4"	122

The water closet gasket regularly furnished is made of molded neoprene and designed to fit water closet outlet dimensions and configurations shown in ANSI Standard A112.19.2M, Figure 13B. If gasket is not found to be compatible to fixture due to nonconformance of said fixture to ANSI A112.19.2M, then fixture manufacturer shall be consulted for a suitable gasket recommendation. Jay R. Smith assumes no liability for connections to fixtures which do not conform to these standards.

ADD FOR:

	SINGLE	DOUBLE
Cast Iron or PVC Outlet Nipple & Steel Studs over 12" (**PER INCH**)	**129.00**	**258.00**
Type 2 Female Coupling	**54.00**	**108.00**
Type 2M Male Coupling	**54.00**	**108.00**
M13 Finishing Frame	**104.00**	**208.00**

© dimension = 4" (regularly furnished) consisting of nipple and Adjus-to-Wall coupling permitting adjustment from 3" min. to 4" max.

NOTE: Base support must be securely anchored to floor (with four 1/2" bolts provided by contractor.)

NOTE: 1 1/2" or 2" tapped inlet available.

***NOTE:** 9" core drilled hole is required for rough-in 4 1/4" thru 6 1/2".

NOTE: Service weight regularly furnished on fittings above.
NOTE: Always specify fixture manufacturer's model name and number.

†REGULARLY FURNISHED

FIG. 0230Y-M54-XK VERTICAL FITTINGS FOR SIPHON JET WATER CLOSETS BARIATRIC DUTY - 1000 LBS.

SMITH CUSTOMER DRIVEN SINCE 1926

SINGLE

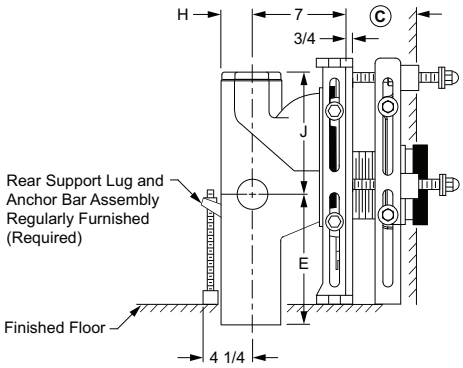

Fig. 0230Y-M54-XK SIDE VIEW

DOUBLE

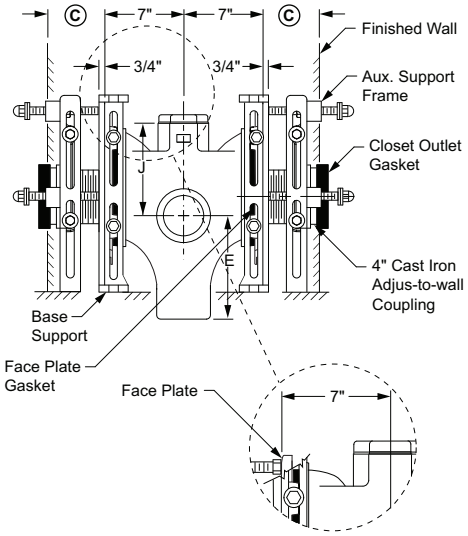

Fig. 0230DY-M54-XK SIDE VIEW

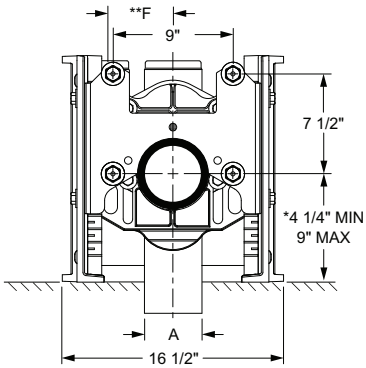

Fig. 0230Y-M54-XK FRONT VIEW

* **NOTE:** 9" core drilled hole is required for rough-in 4 1/4 thru 6 1/2.
** **NOTE:** Dimension is from centerline of vent to centerline of stack.
NOTE: 1 1/2" or 2" NPT Inlet available. Add suffix -N.

© dimension = 4" (regularly furnished) consisting of cast iron nipple and Adjus-to-Wall coupling permitting adjustment from 3" min. to 4" max.

OUTLET TYPE	FIGURE NO.	TYPE OF FITTING	A PIPE SIZE †04"	05"	06"	E	**F	H	J
NO-HUB	0230Y-M54-XK	Single	**6,570.00**			14"	5 1/4"	2 1/4"	9"
	0230DY-M54-XK	Double	**12,662.00**			14"	5 1/4"	2 1/4"	9"
	0230Y-M54-XK	Single		**7,135.00**		11 1/2"	6 1/4"	2 3/4"	11 1/2"
	0230DY-M54-XK	Double		**13,169.00**		11 1/2"	6 1/4"	2 3/4"	11 1/2"
	0230Y-M54-XK	Single			**7,611.00**	11 1/2"	6 1/4"	3 1/4"	11 1/2"
	0230DY-M54-XK	Double			**13,649.00**	11 1/2"	6 1/4"	3 1/4"	11 1/2"

NOTE: Base support must be securely anchored to floor with 1/2" anchors able to withstand a pull-out force of 500 lbs. The rear anchor bar must be securely anchored to floor with 1/2" anchors able to withstand a pull-out force of 1000 lbs. Pull-out forces are calculated values, no safety factor has been applied.

ADD FOR:

	SINGLE	DOUBLE
Cast Iron or PVC Outlet Nipple & Steel Studs over 12" (**PER INCH**)	**129.00**	**258.00**
Type 2 Female Coupling	**54.00**	**108.00**
Type 2M Male Coupling	**54.00**	**108.00**
M13 Finishing Frame	**104.00**	**208.00**

Jay R. Smith 0230Y-M54-XK complies with and/or exceeds all requirements of ASME A112.6.1M up to 1000 lbs.

NOTE: Service weight regularly furnished on fittings above.
NOTE: Always specify fixture manufacturer's model name and number.

†REGULARLY FURNISHED

FIG. 0230Y-M54-XX VERTICAL FITTINGS FOR SIPHON JET WATER CLOSETS EXTRA HEAVY DUTY - 750 LBS.

SINGLE

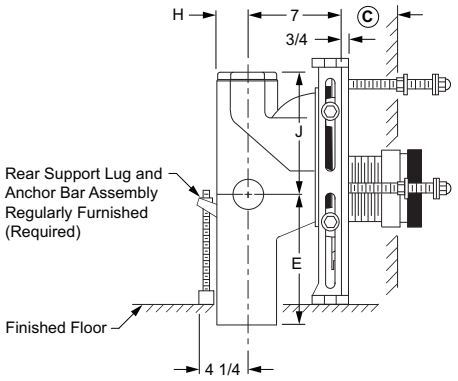

Fig. 0230Y-M54-XX SIDE VIEW

DOUBLE

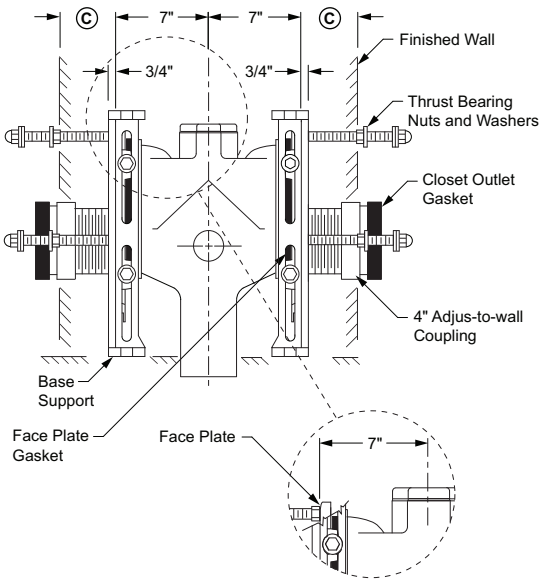

Fig. 0230DY-M54-XX SIDE VIEW

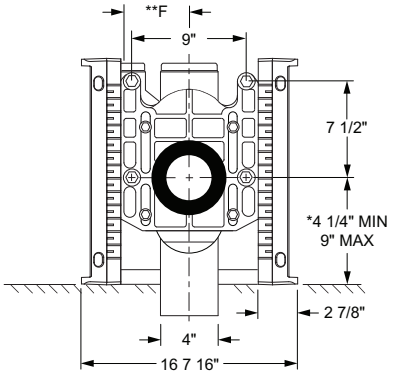

Fig. 0230Y-M54-XX FRONT VIEW

* **NOTE:** 9" core drilled hole is required for rough-in 4 1/4 thru 6 1/2.
** **NOTE:** Dimension is from centerline of vent to centerline of stack.
NOTE: 1 1/2" or 2" NPT Inlet available. Add suffix -N.

© dimension = 4" (regularly furnished) consisting of nipple and Adjus-to-Wall coupling permitting adjustment from 3" min. to 4" max.

OUTLET TYPE	FIGURE NO.	TYPE OF FITTING	A PIPE SIZE †04"	05"	06"	E	**F	H	J
NO-HUB	0230Y-M54-XX	Single	**4,772.00**			14"	5 1/4"	2 1/4"	9"
	0230DY-M54-XX	Double	**4,772.00**			14"	5 1/4"	2 1/4"	9"
	0230Y-M54-XX	Single		**5,337.00**		11 1/2"	6 1/4"	2 3/4"	11 1/2"
	0230DY-M54-XX	Double		**5,337.00**		11 1/2"	6 1/4"	2 3/4"	11 1/2"
	0230Y-M54-XX	Single			**5,813.00**	11 1/2"	6 1/4"	3 1/4"	11 1/2"
	0230DY-M54-XX	Double			**5,813.00**	11 1/2"	6 1/4"	3 1/4"	11 1/2"

NOTE: Base support must be securely anchored to floor with 1/2" anchors able to withstand a pull-out force of 500 lbs. The rear anchor bar must be securely anchored to floor with 1/2" anchors able to withstand a pull-out force of 1000 lbs. Pull-out forces are calculated values, no safety factor has been applied.

ADD FOR:

	SINGLE	DOUBLE
Cast Iron or PVC Outlet Nipple & Steel Studs over 12" (**PER INCH**)	**129.00**	**258.00**
Type 2 Female Coupling	**54.00**	**108.00**
Type 2M Male Coupling	**54.00**	**108.00**
M13 Finishing Frame	**104.00**	**208.00**

Jay R. Smith 0230Y-M54-XX complies with and/or exceeds all requirements of ASME A112.6.1M up to 750 lbs.

NOTE: Service weight regularly furnished on fittings above.
NOTE: Always specify fixture manufacturer's model name and number.

†REGULARLY FURNISHED

FIG. 0230Y-M58/54-XK VERTICAL FITTINGS FOR SIPHON JET WATER CLOSETS BARIATRIC DUTY - 1000 LBS.

SINGLE

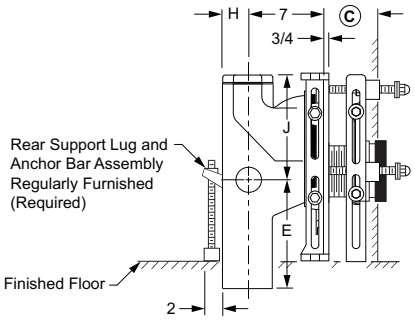

Fig. 0230Y-M58-M54-XK SIDE VIEW

DOUBLE

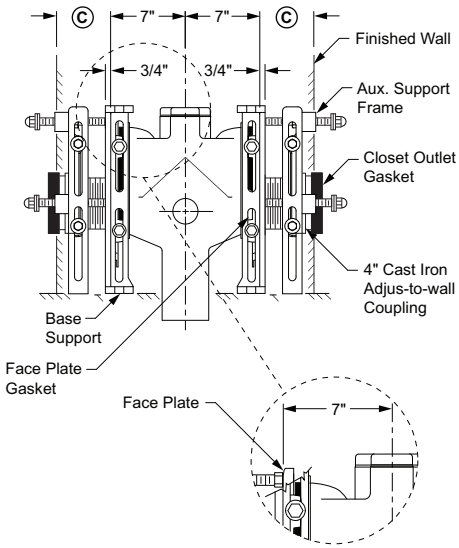

Fig. 0230DY-M58-M54-XK SIDE VIEW

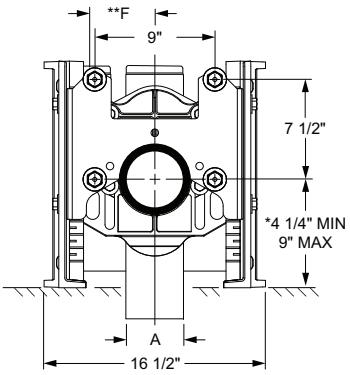

Fig. 0230Y-M58-M54-XK FRONT VIEW

* **NOTE:** 9" core drilled hole is required for rough-in 4 1/4 thru 6 1/2.

** **NOTE:** "F" Dimension is from centerline of vent to centerline of stack.

NOTE: When used with concealed flush valve locate face plate behind supply pipe.

NOTE: Shallower minimum rough-in dimension available to accommodate lower rough bowls. Specify dimension required.

NOTE: 1 1/2" or 2" NPT Inlet available. Add suffix -N.

OUTLET TYPE	FIGURE NO.	TYPE OF FITTING	A PIPE SIZE †04"	05"	06"	E	**F	H	J
NO-HUB	0230Y-M58/54-XK	Single	**6,570.00**			14"	5 1/4"	2 1/4"	9"
	0230DY-M58/54-XK	Double	**12,662.00**			14"	5 1/4"	2 1/4"	9"
	0230Y-M58/54-XK	Single		**7,135.00**		11 1/2"	6 1/4"	2 3/4"	11 1/2"
	0230DY-M58/54-XK	Double		**13,169.00**		11 1/2"	6 1/4"	2 3/4"	11 1/2"
	0230Y-M58/54-XK	Single			**7,611.00**	11 1/2"	6 1/4"	3 1/4"	11 1/2"
	0230DY-M58/54-XK	Double			**13,649.00**	11 1/2"	6 1/4"	3 1/4"	11 1/2"

ADD FOR:

	SINGLE	DOUBLE
Cast Iron or PVC Outlet Nipple & Steel Studs over 12" (**PER INCH**)	**129.00**	**258.00**
Type 2 Female Coupling	**54.00**	**108.00**
Type 2M Male Coupling	**54.00**	**108.00**
M13 Finishing Frame	**104.00**	**208.00**

LENGTH	MIN ©	MAX
5 1/4	4 1/4"	4 3/4"

NOTE: Base support must be securely anchored to floor with 1/2" anchors able to withstand a pull-out force of 500 lbs. The rear anchor bar must be securely anchored to floor with 1/2" anchors able to withstand a pull-out force of 1000 lbs. Pull-out forces are calculated values, no safety factor has been applied.

Jay R. Smith 0230Y-M58-M54-XK complies with and/or exceeds all requirements of ASME A112.6.1M up to 1000 lbs.

NOTE: Service weight regularly furnished on fittings above.
NOTE: Always specify fixture manufacturer's model name and number.

†REGULARLY FURNISHED

FIXTURE SUPPORTS

FIG. 0230Y-M58/54-XX VERTICAL FITTINGS FOR SIPHON JET WATER CLOSETS EXTRA HEAVY DUTY - 750 LBS.

SINGLE

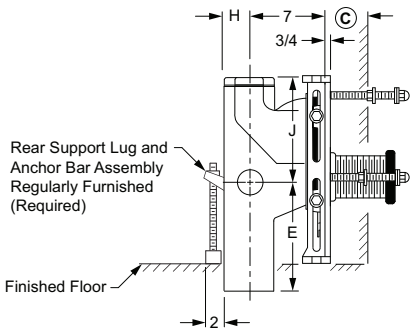

Fig. 0230Y-M58-M54-XX SIDE VIEW

DOUBLE

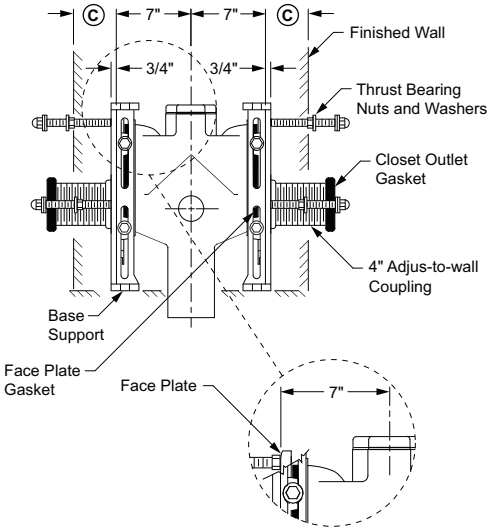

Fig. 0230DY-M58-M54-XX SIDE VIEW

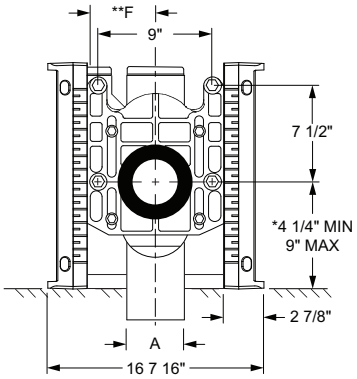

Fig. 0230Y-M58-M54-XX FRONT VIEW

* **NOTE:** 9" core drilled hole is required for rough-in 4 1/4 thru 6 1/2.

** **NOTE:** "F" Dimension is from centerline of vent to centerline of stack.

NOTE: When used with concealed flush valve locate face plate behind supply pipe.

NOTE: Shallower minimum rough-in dimension available to accommodate lower rough bowls. Specify dimension required.

NOTE: 1 1/2" or 2" NPT Inlet available. Add suffix -N.

OUTLET TYPE	FIGURE NO.	TYPE OF FITTING	A PIPE SIZE †04"	05"	06"	E	**F	H	J
NO-HUB	0230Y-M58/54-XX	Single	**4,772.00**			14"	5 1/4"	2 1/4"	9"
	0230DY-M58/54-XX	Double	**4,772.00**			14"	5 1/4"	2 1/4"	9"
	0230Y-M58/54-XX	Single		**5,337.00**		11 1/2"	6 1/4"	2 3/4"	11 1/2"
	0230DY-M58/54-XX	Double		**5,337.00**		11 1/2"	6 1/4"	2 3/4"	11 1/2"
	0230Y-M58/54-XX	Single			**5,813.00**	11 1/2"	6 1/4"	3 1/4"	11 1/2"
	0230DY-M58/54-XX	Double			**5,813.00**	11 1/2"	6 1/4"	3 1/4"	11 1/2"

ADD FOR:

	SINGLE	DOUBLE
Cast Iron or PVC Outlet Nipple & Steel Studs over 12" (**PER INCH**)	**129.00**	**258.00**
Type 2 Female Coupling	**54.00**	**108.00**
Type 2M Male Coupling	**54.00**	**108.00**
M13 Finishing Frame	**104.00**	**208.00**

NOTE: Base support must be securely anchored to floor with 1/2" anchors able to withstand a pull-out force of 500 lbs. The rear anchor bar must be securely anchored to floor with 1/2" anchors able to withstand a pull-out force of 1000 lbs. Pull-out forces are calculated values, no safety factor has been applied.

LENGTH	MIN © MAX
10	8 3/4" 9 3/4"

Jay R. Smith 0230Y-M58-M54-XX complies with and/or exceeds all requirements of ASME A112.6.1M up to 750 lbs.

NOTE: Service weight regularly furnished on fittings above.
NOTE: Always specify fixture manufacturer's model name and number.

†REGULARLY FURNISHED

FIG. 0240, 0250, 0270, 0280 SERIES VERTICAL FITTINGS FOR SIPHON JET WATER CLOSETS WITH SIDE INLETS

SINGLE

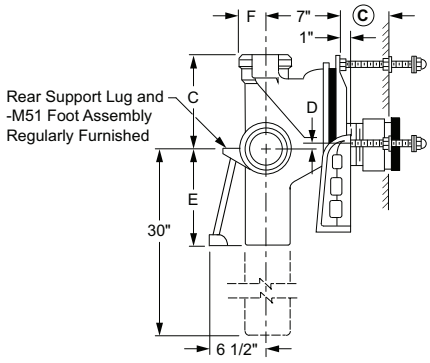

Fig. 0240
SIDE VIEW

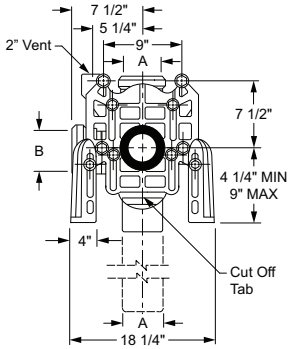

Fig. 0240
FRONT VIEW

DOUBLE

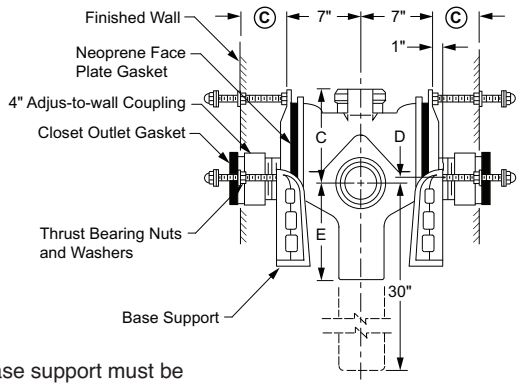

Fig. 0240D
SIDE VIEW

NOTE: Base support must be securely anchored to floor (with four 1/2" bolts provided by contractor).

NOTE: 1 1/2 or 2" NPT inlet available. Add suffix -N

NOTE: © dimension = 4" (regularly furnished) consisting of nipple and Adjus-to-Wall coupling permitting adjustment from 3" min. to 4" max.

The water closet gasket regularly furnished is made of molded neoprene and designed to fit water closet outlet dimensions and configurations shown in ANSI Standard A112.19.2M, Figure 13B. If gasket is not found to be compatible to fixture due to nonconformance of said fixture to ANSI A112.19.2M, then fixture manufacturer shall be consulted for a suitable gasket recommendation. Jay R. Smith assumes no liability for connections to fixtures which do not conform to these standards.

OUTLET TYPE	FIGURE NO.	TYPE OF FITTING	A X B SIZE †04" X 04"	05" X 04" OR 05"	06" X 04"	C	D MIN	D MAX	E	F	APPROX. WT. LBS.
	0240L	Single–Left Hand with Side Hub Inlet	**2,811.00**			9"	1 1/2"	4 1/4"	10"	3"	87
	0240R	Single–Right Hand with Side Hub Inlet	**2,811.00**			9"	1 1/2"	4 1/4"	10"	3"	87
	0240D	Double–with Side Hub Inlet	**4,574.00**			9"	1 1/2"	4 1/4"	10"	3"	139
	0240L	Single–Left Hand with Side Hub Inlet		**3,461.00**		11 1/2"	1 1/2"	4 1/4"	11 1/2"	3 1/2"	87
	0240R	Single–Right Hand with Side Hub Inlet		**3,461.00**		11 1/2"	1 1/2"	4 1/4"	11 1/2"	3 1/2"	87
	0240D	Double–with Side Hub Inlet		**5,238.00**		11 1/2"	1 1/2"	4 1/4"	11 1/2"	3 1/2"	139
	0240L	Single–Left Hand with Side Hub Inlet			**3,969.00**	11 1/2"	1 1/2"	4 1/4"	11 1/2"	4"	87
	0240D	Double–with Side Hub Inlet			**5,742.00**	11 1/2"	1 1/2"	4 1/4"	11 1/2"	4"	139
	0250	Single–with Two Side Hub Inlets	**3,208.00**			9"	1 1/2"	4 1/4"	10"	3"	100
	0250D	Double–with Two Side Hub Inlets	**4,970.00**			9"	1 1/2"	4 1/4"	10"	3"	144
	0250	Single–with Two Side Hub Inlets		**3,861.00**		11 1/2"	1 1/2"	4 1/4"	11 1/2"	3 1/2"	100
	0250D	Double–with Two Side Hub Inlets		**5,638.00**		11 1/2"	1 1/2"	4 1/4"	11 1/2"	3 1/2"	144
	0250	Single–with Two Side Hub Inlets			**4,368.00**	11 1/2"	1 1/2"	4 1/4"	11 1/2"	4"	100
CAULK	0250D	Double–with Two Side Hub Inlets			**6,144.00**	11 1/2"	1 1/2"	4 1/4"	11 1/2"	4"	144
	0270L	Single–Left Hand with Side Hub Inlet—Long Barrel	**4,033.00**			9"	1 1/2"	4 1/4"	10"	3"	116
	0270R	Single–Right Hand with Side Hub Inlet—Long Barrel	**4,033.00**			9"	1 1/2"	4 1/4"	10"	3"	116
	0270D	Double—with Side Hub Inlet—Long Barrel	**5,796.00**			9"	1 1/2"	4 1/4"	10"	3"	158
	0270L	Single–Left Hand with Side Hub Inlet—Long Barrel		**7,131.00**		11 1/2"	1 1/2"	4 1/4"	11 1/2"	3 1/2"	116
	0270R	Single–Right Hand with Side Hub Inlet—Long Barrel		**7,131.00**		11 1/2"	1 1/2"	4 1/4"	11 1/2"	3 1/2"	116
	0270D	Double—with Side Hub Inlet—Long Barrel		**8,912.00**		11 1/2"	1 1/2"	4 1/4"	11 1/2"	3 1/2"	158
	0270L	Single–Left Hand with Side Hub Inlet—Long Barrel			**8,286.00**	11 1/2"	1 1/2"	4 1/4"	11 1/2"	4"	116
	0270D	Double—with Side Hub Inlet—Long Barrel			**10,062.00**	11 1/2"	1 1/2"	4 1/4"	11 1/2"	4"	158
	0280	Single—with Two Side Hub Inlets—Long Barrel	**4,427.00**			9"	1 1/2"	4 1/4"	10"	3"	119
	0280D	Double—with Two Side Hub Inlets—Long Barrel	**6,193.00**			9"	1 1/2"	4 1/4"	10"	3"	163
	0280	Single—with Two Side Hub Inlets—Long Barrel		**7,525.00**		11 1/2"	1 1/2"	4 1/4"	11 1/2"	3 1/2"	119
	0280D	Double—with Two Side Hub Inlets—Long Barrel		**9,306.00**		11 1/2"	1 1/2"	4 1/4"	11 1/2"	3 1/2"	163
	0280	Single—with Two Side Hub Inlets—Long Barrel			**8,678.00**	11 1/2"	1 1/2"	4 1/4"	11 1/2"	4"	119
	0280D	Double—with Two Side Hub Inlets—Long Barrel			**10,458.00**	11 1/2"	1 1/2"	4 1/4"	11 1/2"	4"	163

ADD FOR:

	SINGLE	DOUBLE
Cast Iron or PVC Outlet Nipple & Steel Studs over 12" (**PER INCH**)	**129.00**	**258.00**
Type 2 Female Coupling	**54.00**	**108.00**
Type 2M Male Coupling	**54.00**	**108.00**
M13 Finishing Frame	**104.00**	**208.00**

NOTE: Service weight regularly furnished on fittings above.
NOTE: Always specify fixture manufacturer's model name and number.

†REGULARLY FURNISHED

FIXTURE SUPPORTS

FIG. 0240Y, 0250Y SERIES VERTICAL FITTINGS FOR SIPHON JET WATER CLOSETS WITH SIDE INLETS

SINGLE

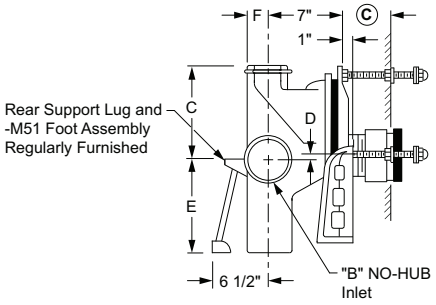

Fig. 0240Y
SIDE VIEW

DOUBLE

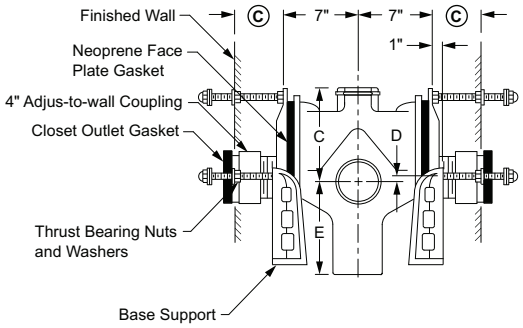

Fig. 0240DY
SIDE VIEW

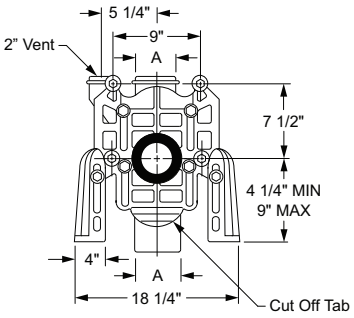

Fig. 0240Y
FRONT VIEW

NOTE: Base support must be securely anchored to floor (with four 1/2" bolts provided by contractor).

NOTE: Centerline of stack to end of NO-HUB side inlet in 5"

***NOTE:** 9" core drilled hole is required for rough-in 4 1/4 thru 6 1/2 .

© dimension = 4" (regularly furnished) consisting of nipple and Adjus-to-Wall coupling permitting adjustment from 3" min. to 4" max.

The water closet gasket regularly furnished is made of molded neoprene and designed to fit water closet outlet dimensions and configurations shown in ANSI Standard A112.19.2M, Figure 13B. If gasket is not found to be compatible to fixture due to nonconformance of said fixture to ANSI A112.19.2M, then fixture manufacturer shall be consulted for a suitable gasket recommendation. Jay R. Smith assumes no liability for connections to fixtures which do not conform to these standards.

OUTLET TYPE	FIGURE NO.	TYPE OF FITTING	A X B SIZE †04" X 04"	05" X 04" OR 05"	06" X 04"	C	D MIN	D MAX	E	F	APPROX. WT. LBS.
NO-HUB	0240LY	Single–Left Hand with Side Inlet	**2,707.00**			9"	1 1/2"	4 1/4"	14"	2 1/4"	76
	0240RY	Single–Right Hand with Side Inlet	**2,707.00**			9"	1 1/2"	4 1/4"	14"	2 1/4"	76
	0240DY	Double–with Side Inlet	**4,475.00**			9"	1 1/2"	4 1/4"	14"	2 1/4"	122
	0240LY	Single–Left Hand with Side Inlet		**3,259.00**		11 1/2"	1 1/2"	4 1/4"	11 1/2"	2 3/4"	76
	0240RY	Single–Right Hand with Side Inlet		**3,259.00**		11 1/2"	1 1/2"	4 1/4"	11 1/2"	2 3/4"	76
	0240DY	Double–with Side Inlet		**4,974.00**		11 1/2"	1 1/2"	4 1/4"	11 1/2"	2 3/4"	122
	0240LY	Single–Left Hand with Side Inlet			**3,749.00**	11 1/2"	1 1/2"	4 1/4"	11 1/2"	3 1/4"	76
	0240DY	Double–with Side Inlet			**5,468.00**	11 1/2"	1 1/2"	4 1/4"	11 1/2"	3 1/4"	122
	0250Y	Single–with Two Side Inlets	**3,108.00**			9"	1 1/2"	4 1/4"	14"	2 1/4"	76
	0250DY	Double–with Two Side Inlets	**4,870.00**			9"	1 1/2"	4 1/4"	14"	2 1/4"	122
	0250Y	Single–with Two Side Inlets		**3,641.00**		11 1/2"	1 1/2"	4 1/4"	11 1/2"	2 3/4"	76
	0250DY	Double–with Two Side Inlets		**5,350.00**		11 1/2"	1 1/2"	4 1/4"	11 1/2"	2 3/4"	122
	0250Y	Single–with Two Side Inlets			**4,095.00**	11 1/2"	1 1/2"	4 1/4"	11 1/2"	3 1/4"	76
	0250DY	Double–with Two Side Inlets			**5,846.00**	11 1/2"	1 1/2"	4 1/4"	11 1/2"	3 1/4"	122

ADD FOR:

	SINGLE	DOUBLE
Cast Iron or PVC Outlet Nipple & Steel Studs over 12" (**PER INCH**)	**129.00**	**258.00**
Type 2 Female Coupling	**54.00**	**108.00**
Type 2M Male Coupling	**54.00**	**108.00**
M13 Finishing Frame	**104.00**	**208.00**

NOTE: Service weight regularly furnished on fittings above.
NOTE: Always specify fixture manufacturer's model name and number.

†REGULARLY FURNISHED

FIG. 0240Y-M54-XK VERTICAL FITTINGS FOR SIPHON JET WATER CLOSETS WITH SIDE INLET BARIATRIC DUTY - 1000 LBS.

SINGLE

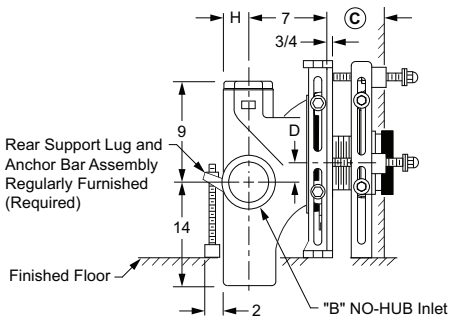

Fig. 0240Y-M54-XK SIDE VIEW

DOUBLE

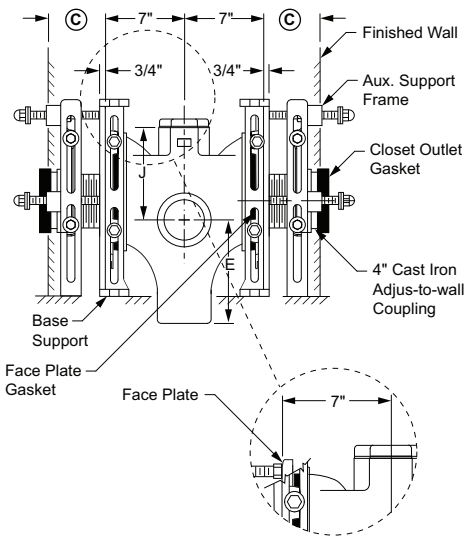

Fig. 0230DY-M54-XK SIDE VIEW

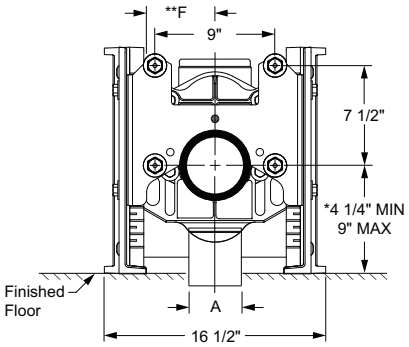

Fig. 0240Y-M54-XK FRONT VIEW

NOTE: Shallower minimum rough-in dimension to accommodate lower rough bowls available. Specify dimension required.

NOTE: 1 1/2" or 2" tapped inlet available. Add suffix -N.

NOTE: *9" core drilled hole is required for rough-in 4 1/4 thru 6 1/2.

© dimension = 4 1/4" to 5 1/4" with regularly furnished 4 1/2" cast iron nipple and Adjus-to-Wall coupling.

**F dimension is from centerline of vent to centerline of stack.

OUTLET TYPE	FIGURE NO.	TYPE OF FITTING	A X B SIZE †04" X 04"	05" X 04" OR 05"	06" X 04"	D MIN	D MAX	E	**F	H	J
NO-HUB	0240LY-M54-XK	Single–Left Hand with Side Inlet	**6,962.00**			1 1/2"	4 1/4"	14"	5 1/4"	2 1/4"	9"
	0240RY-M54-XK	Single–Right Hand with Side Inlet	**6,962.00**			1 1/2"	4 1/4"	14"	5 1/4"	2 1/4"	9"
	0240DY-M54-XK	Double–with Side Inlet	**13,047.00**			1 1/2"	4 1/4"	14"	5 1/4"	2 1/4"	9"
	0240LY-M54-XK	Single–Left Hand with Side Inlet		**7,515.00**		1 1/2"	4 1/4"	11 1/2"	6 1/2"	2 3/4"	11 1/2"
	0240RY-M54-XK	Single–Right Hand with Side Inlet		**7,515.00**		1 1/2"	4 1/4"	11 1/2"	6 1/2"	2 3/4"	11 1/2"
	0240DY-M54-XK	Double–with Side Inlet		**13,547.00**		1 1/2"	4 1/4"	11 1/2"	6 1/2"	2 3/4"	11 1/2"
	0240LY-M54-XK	Single–Left Hand with Side Inlet			**8,003.00**	1 1/2"	4 1/4"	11 1/2"	6 1/4"	3 1/4"	11 1/2"
	0240DY-M54-XK	Double–with Side Inlet			**14,041.00**	1 1/2"	4 1/4"	11 1/2"	6 1/4"	3 1/4"	11 1/2"

ADD FOR:	SINGLE	DOUBLE
Cast Iron or PVC Outlet Nipple & Steel Studs over 12" (**PER INCH**)	**129.00**	**258.00**
Type 2 Female Coupling	**54.00**	**108.00**
Type 2M Male Coupling	**54.00**	**108.00**
M13 Finishing Frame	**104.00**	**208.00**

NOTE: Base support must be securely anchored to floor with 1/2" anchors able to withstand a pull-out force of 500 lbs. The rear anchor bar must be securely anchored to floor with 1/2" anchors able to withstand a pull-out force of 1000 lbs. Pull-out forces are calculated values, no safety factor has been applied.

Jay R. Smith 0240Y-M54-XK complies with and/or exceeds all requirements of ASME A112.6.1M up to 1000 lbs.

NOTE: Service weight regularly furnished on fittings above.
NOTE: Always specify fixture manufacturer's model name and number.

†REGULARLY FURNISHED

FIXTURE SUPPORTS

FIG. 0240Y-M54-XX VERTICAL FITTINGS FOR SIPHON JET WATER CLOSETS WITH SIDE INLET EXTRA HEAVY DUTY - 750 LBS.

SINGLE

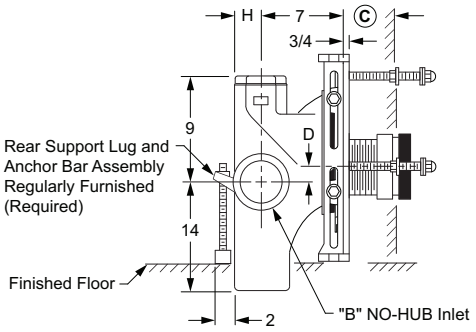

Fig. 0240Y-M54-XX SIDE VIEW

DOUBLE

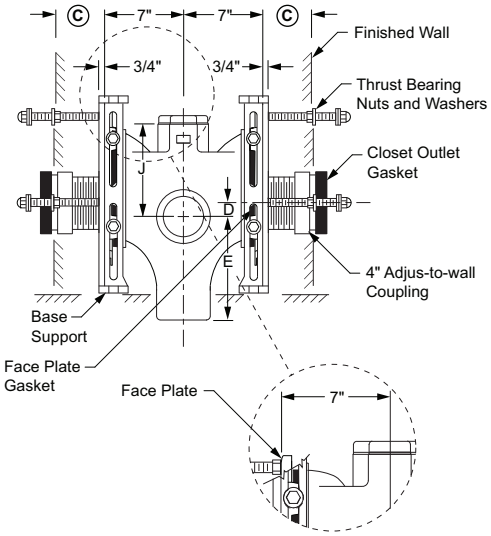

Fig. 0240DY-M54-XX SIDE VIEW

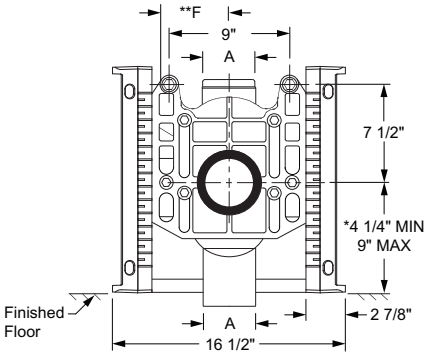

Fig. 0240Y-M54-XX FRONT VIEW

NOTE: Shallower minimum rough-in dimension to accommodate lower rough bowls available. Specify dimension required.

NOTE: 1 1/2" or 2" tapped inlet available. Add suffix -N.

NOTE: *9" core drilled hole is required for rough-in 4 1/4 thru 6 1/2.

© dimension = 4" regularly furnished consisting of nipple and Adjus-to-Wall coupling permitting adjustment from 3" min. to 4" max.

**F dimension is from centerline of vent to centerline of stack.

OUTLET TYPE	FIGURE NO.	TYPE OF FITTING	A X B SIZE †04" X 04"	05" X 04" OR 05"	06" X 04"	D MIN	D MAX	E	**F	H	J
NO-HUB	0240LY-M54-XX	Single–Left Hand with Side Inlet	**5,164.00**			1 1/2"	4 1/4"	14"	5 1/4"	2 1/4"	9"
	0240RY-M54-XX	Single–Right Hand with Side Inlet	**5,164.00**			1 1/2"	4 1/4"	14"	5 1/4"	2 1/4"	9"
	0240DY-M54-XX	Double–with Side Inlet	**5,164.00**			1 1/2"	4 1/4"	14"	5 1/4"	2 1/4"	9"
	0240LY-M54-XX	Single–Left Hand with Side Inlet		**5,717.00**		1 1/2"	4 1/4"	11 1/2"	6 1/2"	2 3/4"	11 1/2"
	0240RY-M54-XX	Single–Right Hand with Side Inlet		**5,717.00**		1 1/2"	4 1/4"	11 1/2"	6 1/2"	2 3/4"	11 1/2"
	0240DY-M54-XX	Double–with Side Inlet		**5,717.00**		1 1/2"	4 1/4"	11 1/2"	6 1/2"	2 3/4"	11 1/2"
	0240LY-M54-XX	Single–Left Hand with Side Inlet			**6,205.00**	1 1/2"	4 1/4"	11 1/2"	6 1/4"	3 1/4"	11 1/2"
	0240DY-M54-XX	Double–with Side Inlet			**6,205.00**	1 1/2"	4 1/4"	11 1/2"	6 1/4"	3 1/4"	11 1/2"

ADD FOR:

	SINGLE	DOUBLE
Cast Iron or PVC Outlet Nipple & Steel Studs over 12" (**PER INCH**)	**129.00**	**258.00**
Type 2 Female Coupling	**54.00**	**108.00**
Type 2M Male Coupling	**54.00**	**108.00**
M13 Finishing Frame	**104.00**	**208.00**

NOTE: Base support must be securely anchored to floor with 1/2" anchors able to withstand a pull-out force of 500 lbs. The rear anchor bar must be securely anchored to floor with 1/2" anchors able to withstand a pull-out force of 1000 lbs. Pull-out forces are calculated values, no safety factor has been applied.

Jay R. Smith 0240Y-M54-XX complies with and/or exceeds all requirements of ASME A112.6.1M up to 750 lbs.

NOTE: Service weight regularly furnished on fittings above.
NOTE: Always specify fixture manufacturer's model name and number.

†REGULARLY FURNISHED

FIG. 0240Y-M58/54-XK VERTICAL FITTINGS FOR SIPHON JET WATER CLOSETS WITH SIDE INLET BARIATRIC DUTY - 1000 LBS.

SINGLE

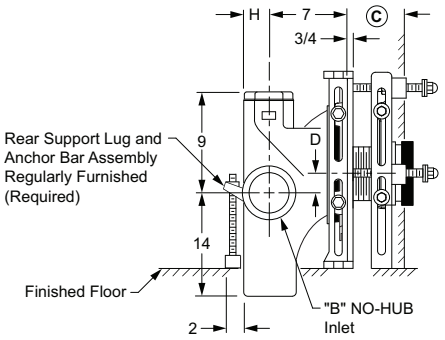

Fig. 0240Y-M58-M54-XK SIDE VIEW

DOUBLE

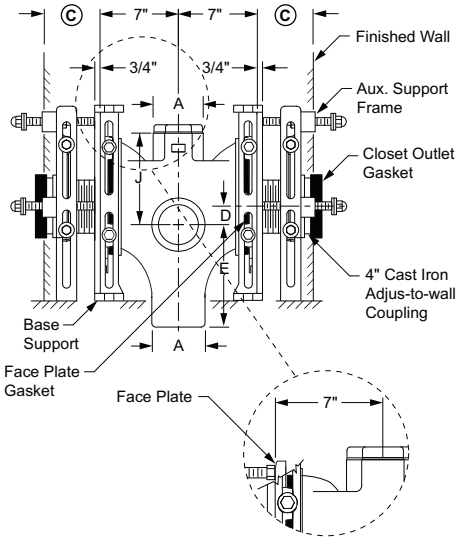

Fig. 0240DY-M58-M54-XK SIDE VIEW

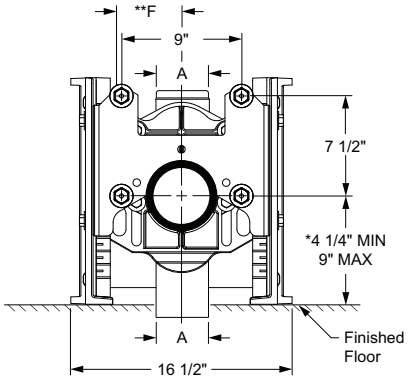

Fig. 0240Y-M58-M54-XK FRONT VIEW

NOTE: Shallower minimum rough-in dimension to accommodate lower rough bowls available. Specify dimension required.

NOTE: 1 1/2" or 2" tapped inlet available. Add suffix -N.

NOTE: *9" core drilled hole is required for rough-in 4 1/4 thru 6 1/2.

© dimension = 4 1/4" to 4 3/4" with regularly furnished 5 1/4" cast iron nipple.

**F dimension is from centerline of vent to centerline of stack.

OUTLET TYPE	FIGURE NO.	TYPE OF FITTING	A X B SIZE †04" X 04"	05" X 04" OR 05"	06" X 04"	D MIN	D MAX	E	**F	H	J
NO-HUB	0240LY-M58/54-XK	Single–Left Hand with Side Inlet	**6,962.00**			1 1/2"	4 1/4"	14"	5 1/4"	2 1/4"	9"
	0240RY-M58/54-XK	Single–Right Hand with Side Inlet	**6,962.00**			1 1/2"	4 1/4"	14"	5 1/4"	2 1/4"	9"
	0240DY-M58/54-XK	Double–with Side Inlet	**13,047.00**			1 1/2"	4 1/4"	14"	5 1/4"	2 1/4"	9"
	0240LY-M58/54-XK	Single–Left Hand with Side Inlet		**7,515.00**		1 1/2"	4 1/4"	11 1/2"	6 1/2"	2 3/4"	11 1/2"
	0240RY-M58/54-XK	Single–Right Hand with Side Inlet		**7,515.00**		1 1/2"	4 1/4"	11 1/2"	6 1/2"	2 3/4"	11 1/2"
	0240DY-M58/54-XK	Double–with Side Hub Inlet		**13,547.00**		1 1/2"	4 1/4"	11 1/2"	6 1/2"	2 3/4"	11 1/2"
	0240LY-M58/54-XK	Single–Left Hand with Side Inlet			**8,003.00**	1 1/2"	4 1/4"	11 1/2"	6 1/4"	3 1/4"	11 1/2"
	0240DY-M58/54-XK	Double–with Side Inlet			**14,041.00**	1 1/2"	4 1/4"	11 1/2"	6 1/4"	3 1/4"	11 1/2"

ADD FOR:

	SINGLE	DOUBLE
Cast Iron or PVC Outlet Nipple & Steel Studs over 12" (**PER INCH**)	**129.00**	**258.00**
Type 2 Female Coupling	**54.00**	**108.00**
Type 2M Male Coupling	**54.00**	**108.00**
M13 Finishing Frame	**104.00**	**208.00**

NOTE: Base support must be securely anchored to floor with 1/2" anchors able to withstand a pull-out force of 500 lbs. The rear anchor bar must be securely anchored to floor with 1/2" anchors able to withstand a pull-out force of 1000 lbs. Pull-out forces are calculated values, no safety factor has been applied.

Jay R. Smith 0240Y-M58/54-XK complies with and/or exceeds all requirements of ASME A112.6.1M up to 1000 lbs.

NOTE: Service weight regularly furnished on fittings above.
NOTE: Always specify fixture manufacturer's model name and number.

†REGULARLY FURNISHED

FIXTURE SUPPORTS

FIG. 0240Y-M58/54-XX VERTICAL FITTINGS FOR SIPHON JET WATER CLOSETS WITH SIDE INLET EXTRA HEAVY DUTY - 750 LBS.

SINGLE

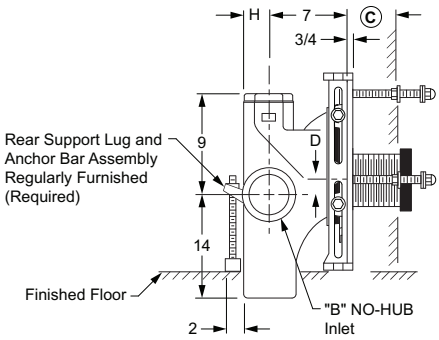

Fig. 0240Y-M58-M54-XX SIDE VIEW

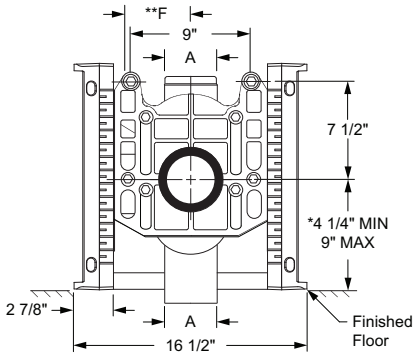

Fig. 0240Y-M58-M54-XX FRONT VIEW

DOUBLE

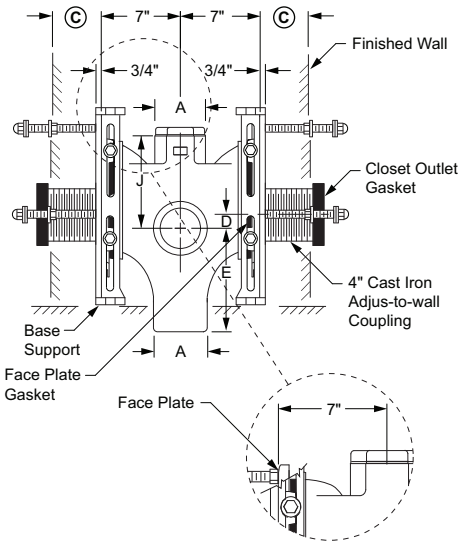

Fig. 0240DY-M58-M54-XX SIDE VIEW

NOTE: Shallower minimum rough-in dimension to accommodate lower rough bowls available. Specify dimension required.

NOTE: 1 1/2" or 2" tapped inlet available. Add suffix -N.

NOTE: *9" core drilled hole is required for rough-in 4 1/4 thru 6 1/2.

© dimension = 3 1/4" to 9 3/4" with regularly furnished 10" nipple. The threaded end of nipple must be cut to specified length required by others.

**F dimension is from centerline of vent to centerline of stack.

OUTLET TYPE	FIGURE NO.	TYPE OF FITTING	A X B SIZE †04" X 04"	05" X 04" OR 05"	06" X 04"	D MIN	D MAX	E	**F	H	J
NO-HUB	0240LY-M58/54-XX	Single–Left Hand with Side Inlet	**5,164.00**			1 1/2"	4 1/4"	14"	5 1/4"	2 1/4"	9"
	0240RY-M58/54-XX	Single–Right Hand with Side Inlet	**5,164.00**			1 1/2"	4 1/4"	14"	5 1/4"	2 1/4"	9"
	0240DY-M58/54-XX	Double–with Side Hub Inlet	**5,164.00**			1 1/2"	4 1/4"	14"	5 1/4"	2 1/4"	9"
	0240LY-M58/54-XX	Single–Left Hand with Side Inlet		**5,717.00**		1 1/2"	4 1/4"	11 1/2"	6 1/2"	2 3/4"	11 1/2"
	0240RY-M58/54-XX	Single–Right Hand with Side Inlet		**5,717.00**		1 1/2"	4 1/4"	11 1/2"	6 1/2"	2 3/4"	11 1/2"
	0240DY-M58/54-XX	Double–with Side Hub Inlet		**5,717.00**		1 1/2"	4 1/4"	11 1/2"	6 1/2"	2 3/4"	11 1/2"
	0240LY-M58/54-XX	Single–Left Hand with Side Inlet			**6,205.00**	1 1/2"	4 1/4"	11 1/2"	6 1/4"	3 1/4"	11 1/2"
	0240DY-M58/54-XX	Double–with Side Inlet			**6,205.00**	1 1/2"	4 1/4"	11 1/2"	6 1/4"	3 1/4"	11 1/2"

ADD FOR:

	SINGLE	DOUBLE
Cast Iron or PVC Outlet Nipple & Steel Studs over 12" (**PER INCH**)	**129.00**	**258.00**
Type 2 Female Coupling	**54.00**	**108.00**
Type 2M Male Coupling	**54.00**	**108.00**
M13 Finishing Frame	**104.00**	**208.00**

NOTE: Base support must be securely anchored to floor with 1/2" anchors able to withstand a pull-out force of 500 lbs. The rear anchor bar must be securely anchored to floor with 1/2" anchors able to withstand a pull-out force of 1000 lbs. Pull-out forces are calculated values, no safety factor has been applied.

Jay R. Smith 0240Y-M58/54-XX complies with and/or exceeds all requirements of ASME A112.6.1M up to 750 lbs.

NOTE: Service weight regularly furnished on fittings above.
NOTE: Always specify fixture manufacturer's model name and number.

†REGULARLY FURNISHED

FIG. 0250Y-M54-XK VERTICAL FITTINGS FOR SIPHON JET WATER CLOSETS WITH TWO SIDE INLETS BARIATRIC DUTY - 1000 LBS.

SMITH CUSTOMER DRIVEN SINCE 1926

SINGLE

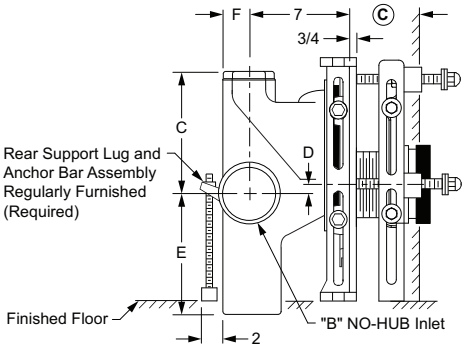

Fig. 0250Y-M54-XK SIDE VIEW

DOUBLE

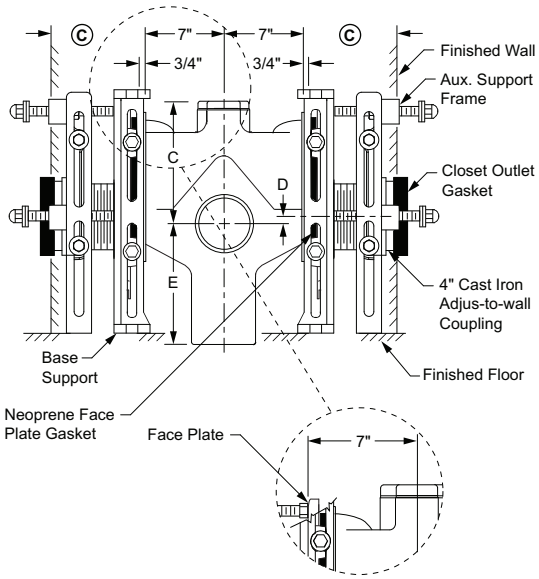

Fig. 0250DY-M54-XK SIDE VIEW

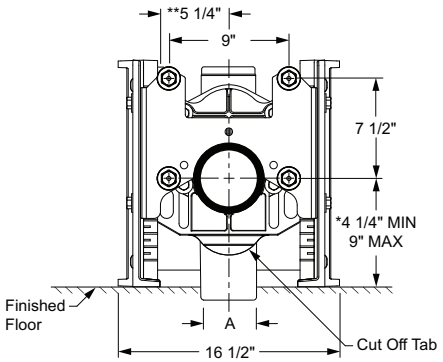

Fig. 0250Y-M54-XK FRONT VIEW

NOTE: Shallower minimum rough-in dimension to accommodate lower rough bowls available. Specify dimension required.

NOTE: Centerline of stack to end of NO-HUB side inlet is 5".

NOTE: *9" core drilled hole is required for rough-in 4 1/4 thru 6 1/2.

© dimension = 4 1/4" to 5 1/4" with regularly furnished 4 1/2" cast iron nipple and Adjus-to-Wall coupling.

**Dimension is from centerline of vent to centerline of stack.

OUTLET TYPE	FIGURE NO.	TYPE OF FITTING	A X B SIZE †04" X 04"	05" X 04" OR 05"	06" X 04"	C	D MIN	D MAX	E	F
NO-HUB	0250Y-M54-XK	Single–with Two Side Inlets	**7,361.00**			9"	1 1/2"	4 1/4"	14"	2 1/4"
	0250DY-M54-XK	Double–with Two Side Inlets	**13,443.00**			9"	1 1/2"	4 1/4"	14"	2 1/4"
	0250Y-M54-XK	Single–with Two Side Inlets		**7,895.00**		11 1/2"	1 1/2"	4 1/4"	11 1/2"	2 3/4"
	0250DY-M54-XK	Double–with Two Side Inlets		**13,922.00**		11 1/2"	1 1/2"	4 1/4"	11 1/2"	2 3/4"
	0250Y-M54-XK	Single–with Two Side Inlets			**8,348.00**	11 1/2"	1 1/2"	4 1/4"	11 1/2"	3 1/4"
	0250DY-M54-XK	Double–with Two Side Inlets			**14,419.00**	11 1/2"	1 1/2"	4 1/4"	11 1/2"	3 1/4"

ADD FOR:

	SINGLE	DOUBLE
Cast Iron or PVC Outlet Nipple & Steel Studs over 12" (**PER INCH**)	**129.00**	**258.00**
Type 2 Female Coupling	**54.00**	**108.00**
Type 2M Male Coupling	**54.00**	**108.00**
M13 Finishing Frame	**104.00**	**208.00**

NOTE: Base support must be securely anchored to floor with 1/2" anchors able to withstand a pull-out force of 500 lbs. The rear anchor bar must be securely anchored to floor with 1/2" anchors able to withstand a pull-out force of 1000 lbs. Pull-out forces are calculated values, no safety factor has been applied.

Jay R. Smith 0250Y-M54-XK complies with and/or exceeds all requirements of ASME A112.6.1M up to 1000 lbs.

NOTE: Service weight regularly furnished on fittings above.
NOTE: Always specify fixture manufacturer's model name and number.

†REGULARLY FURNISHED

FIXTURE SUPPORTS

FIG. 0250Y-M54-XX VERTICAL FITTINGS FOR SIPHON JET WATER CLOSETS WITH TWO SIDE INLETS EXTRA HEAVY DUTY - 750 LBS.

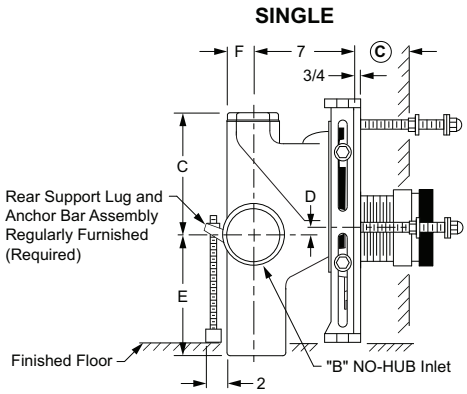

Fig. 0250Y-M54-XX
SIDE VIEW

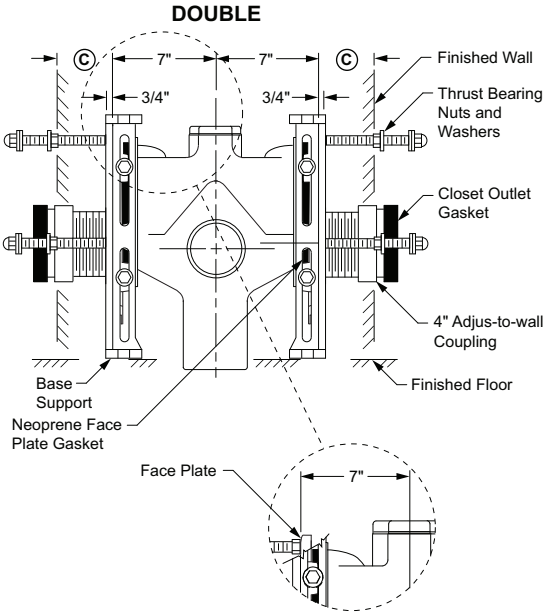

Fig. 0250DY-M54-XX
SIDE VIEW

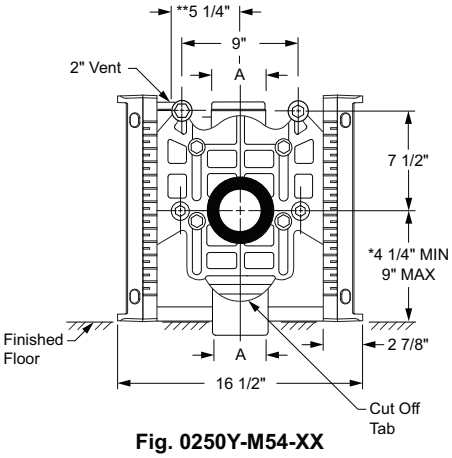

Fig. 0250Y-M54-XX
FRONT VIEW

NOTE: Shallower minimum rough-in dimension to accommodate lower rough bowls available. Specify dimension required.

NOTE: Centerline of stack to end of NO-HUB side inlet is 5".

NOTE: *9" core drilled hole is required for rough-in 4 1/4 thru 6 1/2.

© dimension = 4" (regularly furnished) consisting of nipple and Adjus-to-Wall coupling permitting adjustment from 3" min. to 4" max.

OUTLET TYPE	FIGURE NO.	TYPE OF FITTING	A X B SIZE †04" X 04"	05" X 04" OR 05"	06" X 04"	C	D. MIN	D. MAX	E	F
NO-HUB	0250Y-M54-XX	Single–with Two Side Inlets	**5,563.00**			9"	1 1/2"	4 1/4"	14"	2 1/4"
	0250DY-M54-XX	Double–with Two Side Inlets	**5,563.00**			9"	1 1/2"	4 1/4"	14"	2 1/4"
	0250Y-M54-XX	Single–with Two Side Inlets		**6,097.00**		11 1/2"	1 1/2"	4 1/4"	11 1/2"	2 3/4"
	0250DY-M54-XX	Double–with Two Side Inlets		**6,097.00**		11 1/2"	1 1/2"	4 1/4"	11 1/2"	2 3/4"
	0250Y-M54-XX	Single–with Two Side Inlets			**6,550.00**	11 1/2"	1 1/2"	4 1/4"	11 1/2"	3 1/4"
	0250DY-M54-XX	Double–with Two Side Inlets			**6,550.00**	11 1/2"	1 1/2"	4 1/4"	11 1/2"	3 1/4"

ADD FOR:

	SINGLE	DOUBLE
Cast Iron or PVC Outlet Nipple & Steel Studs over 12" (**PER INCH**)	**129.00**	**258.00**
Type 2 Female Coupling	**54.00**	**108.00**
Type 2M Male Coupling	**54.00**	**108.00**
M13 Finishing Frame	**104.00**	**208.00**

NOTE: Base support must be securely anchored to floor with 1/2" anchors able to withstand a pull-out force of 500 lbs. The rear anchor bar must be securely anchored to floor with 1/2" anchors able to withstand a pull-out force of 1000 lbs. Pull-out forces are calculated values, no safety factor has been applied.

Jay R. Smith 0250Y-M54-XX complies with and/or exceeds all requirements of ASME A112.6.1M up to 750 lbs.

NOTE: Service weight regularly furnished on fittings above.
NOTE: Always specify fixture manufacturer's model name and number.

†REGULARLY FURNISHED

FIG. 0250Y-M58/54-XK VERTICAL FITTINGS FOR SIPHON JET WATER CLOSETS WITH TWO SIDE INLETS BARIATRIC DUTY - 1000 LBS.

SMITH CUSTOMER DRIVEN SINCE 1926

SINGLE

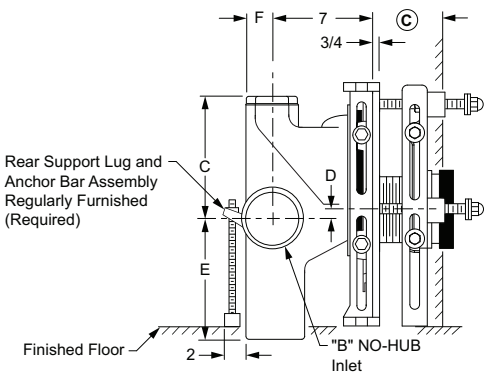

Fig. 0250Y-M58-M54-XK SIDE VIEW

DOUBLE

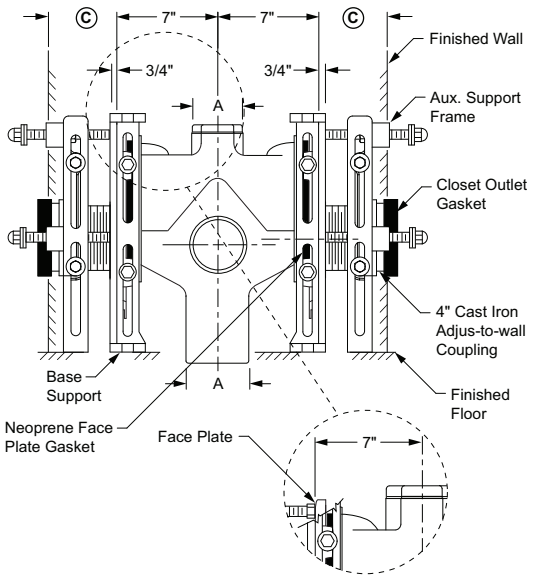

Fig. 0250DY-M58-M54-XK SIDE VIEW

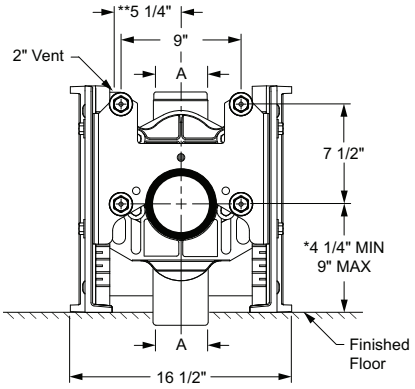

Fig. 0250Y-M58-M54-XK FRONT VIEW

NOTE: Shallower minimum rough-in dimension to accommodate lower rough bowls available. Specify dimension required.

NOTE: Centerline of stack to end of NO-HUB side inlet is 5" .

NOTE: *9" core drilled hole is required for rough-in 4 1/4 thru 6 1/2.

© dimension = 4 1/4" - 4 3/4" with regularly furnished 5 1/4" nipple.

NOTE: **dimension is from centerline of vent to centerline of stack.

OUTLET TYPE	FIGURE NO.	TYPE OF FITTING	A X B SIZE †04" X 04"	05" X 04" OR 05"	06" X 04"	C	D MIN	D MAX	E	F
NO-HUB	0250Y-M58/54-XK	Single–with Two Side Inlets	**7,361.00**			9"	1 1/2"	4 1/4"	14"	2 1/4"
	0250DY-M58/54-XK	Double–with Two Side Inlets	**13,443.00**			9"	1 1/2"	4 1/4"	14"	2 1/4"
	0250Y-M58/54-XK	Single–with Two Side Inlets		**7,895.00**		11 1/2"	1 1/2"	4 1/4"	11 1/2"	2 3/4"
	0250DY-M58/54-XK	Double–with Two Side Inlets		**13,922.00**		11 1/2"	1 1/2"	4 1/4"	11 1/2"	2 3/4"
	0250Y-M58/54-XK	Single–with Two Side Inlets			**8,348.00**	11 1/2"	1 1/2"	4 1/4"	11 1/2"	3 1/4"
	0250DY-M58/54-XK	Double–with Two Side Inlets			**14,419.00**	11 1/2"	1 1/2"	4 1/4"	11 1/2"	3 1/4"

ADD FOR:

	SINGLE	DOUBLE
Cast Iron or PVC Outlet Nipple & Steel Studs over 12" (**PER INCH**)	**129.00**	**258.00**
Type 2 Female Coupling	**54.00**	**108.00**
Type 2M Male Coupling	**54.00**	**108.00**
M13 Finishing Frame	**104.00**	**208.00**

NOTE: Base support must be securely anchored to floor with 1/2" anchors able to withstand a pull-out force of 500 lbs. The rear anchor bar must be securely anchored to floor with 1/2" anchors able to withstand a pull-out force of 1000 lbs. Pull-out forces are calculated values, no safety factor has been applied.

Jay R. Smith 0250Y-M58-M54-XK complies with and/or exceeds all requirements of ASME A112.6.1M up to 1000 lbs.

NOTE: Service weight regularly furnished on fittings above.
NOTE: Always specify fixture manufacturer's model name and number.

†REGULARLY FURNISHED

FIXTURE SUPPORTS

FIG. 0250Y-M58/54-XX VERTICAL FITTINGS FOR SIPHON JET WATER CLOSETS WITH TWO SIDE INLETS EXTRA HEAVY DUTY - 750 LBS.

SINGLE

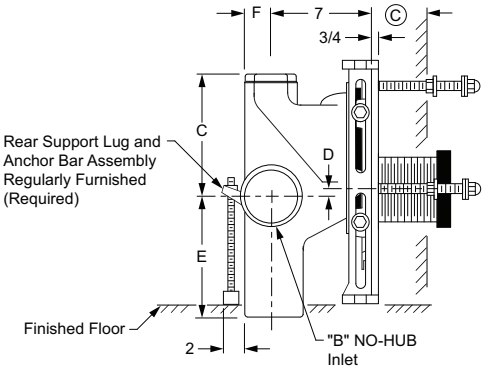

Fig. 0250Y-M58-M54-XX SIDE VIEW

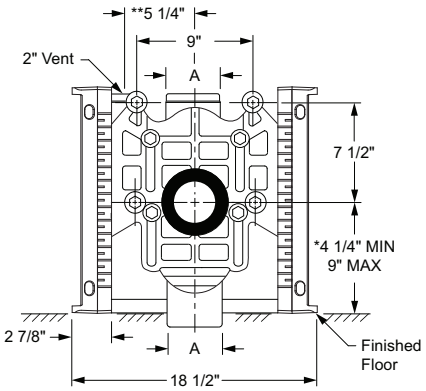

Fig. 0250Y-M58-M54-XX FRONT VIEW

DOUBLE

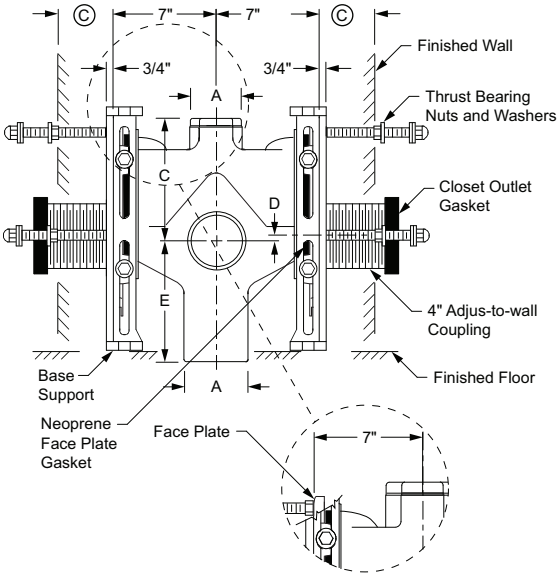

Fig. 0250DY-M58-M54-XX SIDE VIEW

NOTE: Shallower minimum rough-in dimension to accommodate lower rough bowls available. Specify dimension required.

NOTE: Centerline of stack to end of NO-HUB side inlet is 5".

NOTE: *9" core drilled hole is required for rough-in 4 1/4 thru 6 1/2.

© dimension = 3 1/4" - 9 3/4" with regularly furnished 10" nipple. The threaded end of nipple must be cut to specified length required by others.

OUTLET TYPE	FIGURE NO.	TYPE OF FITTING	A X B SIZE †04" X 04"	05" X 04" OR 05"	06" X 04"	C	D MIN	D MAX	E	F
NO-HUB	0250Y-M58/54-XX	Single–with Two Side Inlets	**5,563.00**			9"	1 1/2"	4 1/4"	14"	2 1/4"
	0250DY-M58/54-XX	Double–with Two Side Inlets	**5,563.00**			9"	1 1/2"	4 1/4"	14"	2 1/4"
	0250Y-M58/54-XX	Single–with Two Side Inlets		**6,097.00**		11 1/2"	1 1/2"	4 1/4"	11 1/2"	2 3/4"
	0250DY-M58/54-XX	Double–with Two Side Inlets		**6,097.00**		11 1/2"	1 1/2"	4 1/4"	11 1/2"	2 3/4"
	0250Y-M58/54-XX	Single–with Two Side Inlets			**6,550.00**	11 1/2"	1 1/2"	4 1/4"	11 1/2"	3 1/4"
	0250DY-M58/54-XX	Double–with Two Side Inlets			**6,550.00**	11 1/2"	1 1/2"	4 1/4"	11 1/2"	3 1/4"

ADD FOR:

	SINGLE	DOUBLE
Cast Iron or PVC Outlet Nipple & Steel Studs over 12" (**PER INCH**)	**129.00**	**258.00**
Type 2 Female Coupling	**54.00**	**108.00**
Type 2M Male Coupling	**54.00**	**108.00**
M13 Finishing Frame	**104.00**	**208.00**

NOTE: Base support must be securely anchored to floor with 1/2" anchors able to withstand a pull-out force of 500 lbs. The rear anchor bar must be securely anchored to floor with 1/2" anchors able to withstand a pull-out force of 1000 lbs. Pull-out forces are calculated values, no safety factor has been applied.

Jay R. Smith 0250Y-M58-M54-XX complies with and/or exceeds all requirements of ASME A112.6.1M up to 750 lbs.

NOTE: Service weight regularly furnished on fittings above.
NOTE: Always specify fixture manufacturer's model name and number.

†REGULARLY FURNISHED

FIG. 0315, 0315Y SERIES HORIZONTAL FITTINGS FOR ELEVATED BLOWOUT WATER CLOSETS FOR WHEELCHAIR USERS

SINGLE

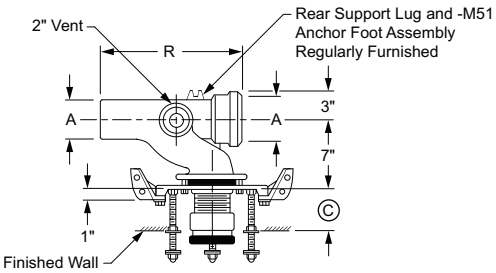

Fig. 0315R
TOP VIEW

DOUBLE

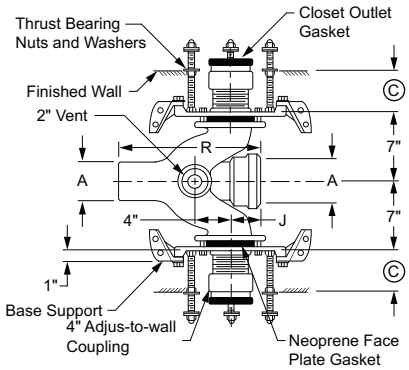

Fig. 0315D
TOP VIEW

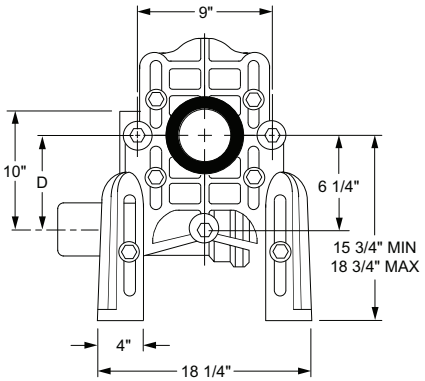

Fig. 0315
FRONT VIEW

NOTE: When used with concealed flush valve locate face plate behind supply pipe.

NOTE: Base support must be securely anchored to floor with four 1/2" bolts provided by contractor.

OUTLET TYPE	FIGURE NO.	TYPE OF FITTING	A PIPE SIZE †04"	D MIN	D MAX	J	R	APPROX. WT. LBS.
CAULK	0315L	Single–Left Hand Hi-set	**2,039.00**	4 5/8"	8 5/8"	3 3/8"	16"	70
	0315R	Single–Right Hand Hi-set	**2,039.00**	4 5/8"	8 5/8"	3 3/8"	16"	70
	0315D	Double–Hi-set	**3,816.00**	4 5/8"	8 5/8"	3 3/8"	16"	134
NO-HUB	0315LY	Single–Left Hand Hi-set	**2,039.00**	4 5/8"	8 5/8"	4"	14"	70
	0315RY	Single–Right Hand Hi-set	**2,039.00**	4 5/8"	8 5/8"	4"	14"	70
	0315DY	Double–Hi-set	**3,816.00**	4 5/8"	8 5/8"	4"	14"	134

ADD FOR:

	SINGLE	DOUBLE
Cast Iron or PVC Outlet Nipple & Steel Studs over 12" (**PER INCH**)	**129.00**	**258.00**
Type 2 Female Coupling	**54.00**	**108.00**
Type 2M Male Coupling	**54.00**	**108.00**
M13 Finishing Frame	**104.00**	**208.00**

The water closet gasket regularly furnished is made of molded neoprene and designed to fit water closet outlet dimensions and configurations shown in ANSI Standard A112.19.2M, Figure 13B. If gasket is not found to be compatible to fixture due to nonconformance of said fixture to ANSI A112.19.2M, then fixture manufacturer shall be consulted for a suitable gasket recommendation. Jay R. Smith assumes no liability for connections to fixtures which do not conform to these standards.

NOTE: Service weight regularly furnished on fittings above.
NOTE: Always specify fixture manufacturer's model name and number.

†REGULARLY FURNISHED

FIXTURE SUPPORTS

FIG. 0330, 0360 VERTICAL FITTINGS FOR BLOWOUT WATER CLOSETS SHALLOW ROUGH-IN TYPE

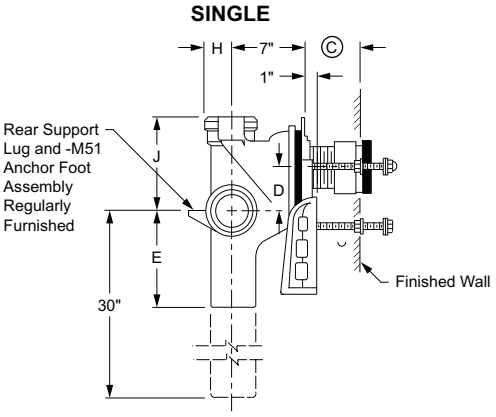

Fig. 0330
SIDE VIEW

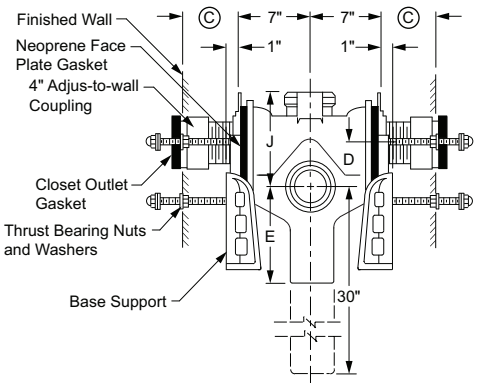

Fig. 0330D
SIDE VIEW

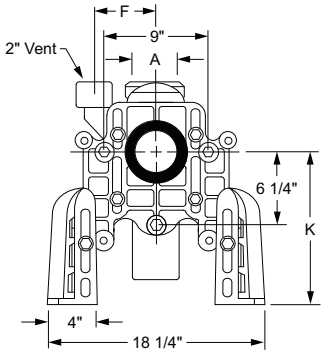

Fig. 0330
FRONT VIEW

NOTE: Base support must be securely anchored to floor with four 1/2" bolts provided by contractor.

NOTE: 1 1/2" or 2" tapped inlet available. Add suffix -N.

NOTE: When used with concealed flush valve locate face plate behind supply pipe.

NOTE: © dimension = 4" (regularly furnished) consisting of nipple and adjus-to-wall coupling permitting adjustment from 3" min. to 4" max.

OUTLET TYPE	FIGURE NO.	TYPE OF FITTING	A PIPE SIZE †04"	05"	06"	D MIN	D MAX	E	F	H	J	K MIN	K MAX	APPROX. WT. LBS.
CAULK	0330	Single	**2,419.00**			2 3/4"	5 1/2"	10"	5 1/4"	3"	9"	10 3/4"	15 3/4"	98
	0330D	Double	**4,189.00**			2 3/4"	5 1/2"	10"	5 1/4"	3"	9"	10 3/4"	15 3/4"	135
	0330	Single		**3,045.00**		2 7/8"	5 3/4"	11 1/2"	6 1/4"	3 1/2"	11 1/2"	10 3/4"	15 3/4"	98
	0330D	Double		**4,845.00**		2 7/8"	5 3/4"	11 1/2"	6 1/4"	3 1/2"	11 1/2"	10 3/4"	15 3/4"	135
	0330	Single			**3,577.00**	2 3/4"	5 1/2"	11 1/2"	6 1/4"	4"	11 1/2"	10 3/4"	15 3/4"	98
	0330D	Double			**5,348.00**	2 3/4"	5 1/2"	11 1/2"	6 1/4"	4"	11 1/2"	10 3/4"	15 3/4"	135
			†04" X 04"	**05" X 04" OR 05"**	**06" X 04"**									
CAULK	0360	Single Long Barrel	**3,632.00**			2 3/4"	5 1/2"	10"	5 1/4"	3"	9"	10 3/4"	15 3/4"	117
	0360D	Double Long Barrel	**5,408.00**			2 3/4"	5 1/2"	10"	5 1/4"	3"	9"	10 3/4"	15 3/4"	154
	0360	Single Long Barrel		**6,720.00**		2 7/8"	5 3/4"	11 1/2"	6 1/4"	3 1/2"	11 1/2"	10 3/4"	15 3/4"	117
	0360D	Double Long Barrel		**8,514.00**		2 7/8"	5 3/4"	11 1/2"	6 1/4"	3 1/2"	11 1/2"	10 3/4"	15 3/4"	154
	0360	Single Long Barrel			**7,894.00**	2 3/4"	5 1/2"	11 1/2"	6 1/4"	4"	11 1/2"	10 3/4"	15 3/4"	117
	0360D	Double Long Barrel			**9,665.00**	2 3/4"	5 1/2"	11 1/2"	6 1/4"	4"	11 1/2"	10 3/4"	15 3/4"	154

ADD FOR:

	SINGLE	DOUBLE
Cast Iron or PVC Outlet Nipple & Steel Studs over 12" (**PER INCH**)	**129.00**	**258.00**
Type 2 Female Coupling	**54.00**	**108.00**
Type 2M Male Coupling	**54.00**	**108.00**
M13 Finishing Frame	**104.00**	**208.00**

The water closet gasket regularly furnished is made of molded neoprene and designed to fit water closet outlet dimensions and configurations shown in ANSI Standard A112.19.2M, Figure 13B.

If gasket is not found to be compatible to fixture due to nonconformance of said fixture to ANSI A112.19.2M, then fixture manufacturer shall be consulted for a suitable gasket recommendation. Jay R. Smith assumes no liability for connections to fixtures which do not conform to these standards.

NOTE: Service weight regularly furnished on fittings above.
NOTE: Always specify fixture manufacturer's model name and number.

†REGULARLY FURNISHED

FIG. 0330Y VERTICAL FITTINGS FOR BLOWOUT WATER CLOSETS - SHALLOW ROUGH-IN TYPE

SINGLE

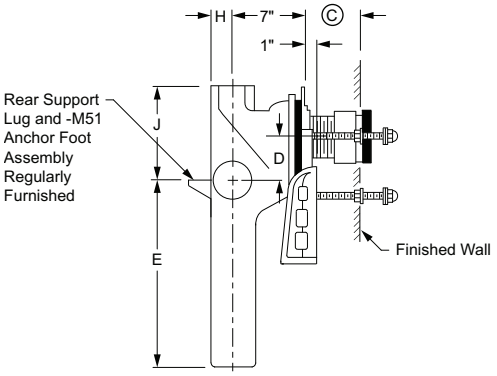

Fig. 0330Y SIDE VIEW

DOUBLE

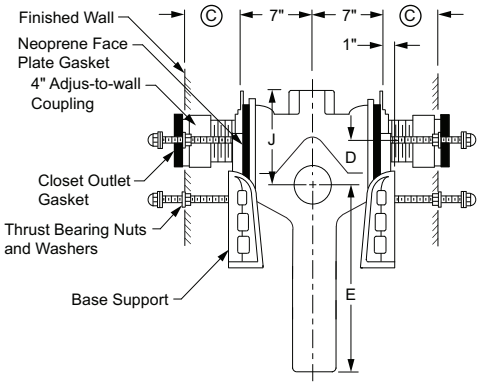

Fig. 0330DY SIDE VIEW

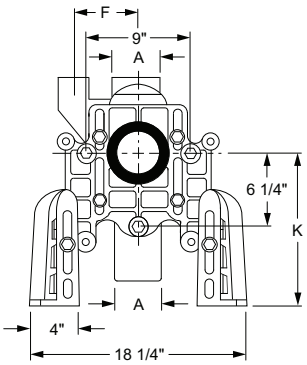

Fig. 0330Y FRONT VIEW

NOTE: Base support must be securely anchored to floor with four 1/2" bolts provided by contractor.

NOTE: 1 1/2" or 2" tapped inlet available.

NOTE: When used with concealed flush valve locate face plate behind supply pipe.

NOTE: © dimension = 4" (regularly furnished) consisting of nipple and Adjus-to-Wall coupling permitting adjustment from 3" min. to 4" max.

OUTLET TYPE	FIGURE NO.	TYPE OF FITTING	A PIPE SIZE †04"	05"	06"	D MIN	D MAX	E	F	H	J	K MIN	K MAX	APPROX. WT. LBS.
NO-HUB	0330Y	Single	**2,315.00**			2 3/4"	5 1/2"	10"	5 1/4"	3"	9"	10 3/4"	15 3/4"	76
	0330DY	Double	**4,089.00**			2 3/4"	5 1/2"	10"	5 1/4"	3"	9"	10 3/4"	15 3/4"	122
	0330Y	Single		**2,881.00**		2 7/8"	5 3/4"	11 1/2"	6 1/4"	3 1/2"	11 1/2"	10 3/4"	15 3/4"	76
	0330DY	Double		**4,597.00**		2 7/8"	5 3/4"	11 1/2"	6 1/4"	3 1/2"	11 1/2"	10 3/4"	15 3/4"	122
	0330Y	Single			**3,357.00**	2 3/4"	5 1/2"	11 1/2"	6 1/4"	4"	11 1/2"	10 3/4"	15 3/4"	76
	0330DY	Double			**5,076.00**	2 3/4"	5 1/2"	11 1/2"	6 1/4"	4"	11 1/2"	10 3/4"	15 3/4"	122

ADD FOR:

	SINGLE	DOUBLE
Cast Iron or PVC Outlet Nipple & Steel Studs over 12" (**PER INCH**)	**129.00**	**258.00**
Type 2 Female Coupling	**54.00**	**108.00**
Type 2M Male Coupling	**54.00**	**108.00**
M13 Finishing Frame	**104.00**	**208.00**

The water closet gasket regularly furnished is made of molded neoprene and designed to fit water closet outlet dimensions and configurations shown in ANSI Standard A112.19.2M, Figure 13B. If gasket is not found to be compatible to fixture due to nonconformance of said fixture to ANSI A112.19.2M, then fixture manufacturer shall be consulted for a suitable gasket recommendation. Jay R. Smith assumes no liability for connections to fixtures which do not conform to these standards.

NOTE: Service weight regularly furnished on fittings above.
NOTE: Always specify fixture manufacturer's model name and number.

†REGULARLY FURNISHED

FIG. 0340, 0350, 0370, 0380 SERIES VERTICAL FITTINGS FOR BLOWOUT WATER CLOSETS WITH SIDE INLETS

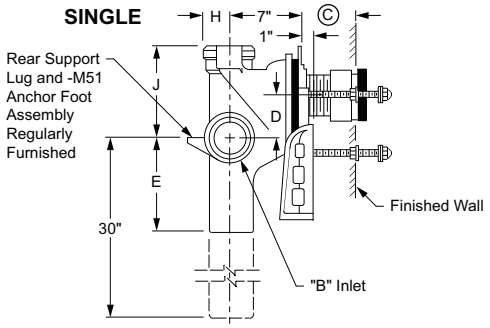

Fig. 0340
SIDE VIEW

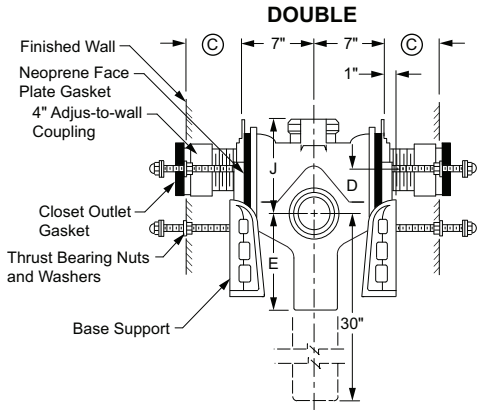

Fig. 0340D
SIDE VIEW

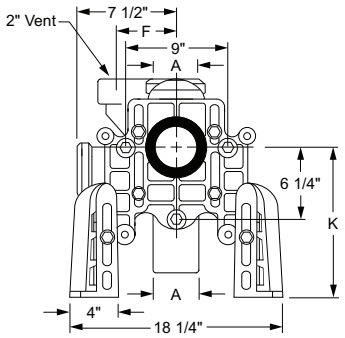

Fig. 0340
FRONT VIEW

NOTE: Base support must be securely anchored to floor (with four 1/2" bolts provided by contractor).

NOTE: 1 1/2 or 2" NPT inlet available. Add suffix -N

NOTE: © dimension = 4" (regularly furnished) consisting of nipple and Adjus-to-Wall coupling permitting adjustment from 3" min. to 4" max.

The water closet gasket regularly furnished is made of molded neoprene and designed to fit water closet outlet dimensions and configurations shown in ANSI Standard A112.19.2M, Figure 13B. If gasket is not found to be compatible to fixture due to nonconformance of said fixture to ANSI A112.19.2M, then fixture manufacturer shall be consulted for a suitable gasket recommendation. Jay R. Smith assumes no liability for connections to fixtures which do not conform to these standards.

OUTLET TYPE	FIGURE NO.	TYPE OF FITTING	A X B SIZE †04" X 04"	05" X 04" OR 05"	06" X 04"	D MIN	D MAX	E	F	H	J	K MIN	K MAX	APPROX. WT. LBS.
	0340L	Single–Left Hand with Side Hub Inlet	**2,811.00**			2 3/4"	5 1/2"	10"	5 1/4"	3"	9"	10 3/4"	15 3/4"	87
	0340R	Single–Right Hand with Side Hub Inlet	**2,811.00**			2 3/4"	5 1/2"	10"	5 1/4"	3"	9"	10 3/4"	15 3/4"	87
	0340D	Double–with Side Hub Inlet	**4,574.00**			2 3/4"	5 1/2"	10"	5 1/4"	3"	9"	10 3/4"	15 3/4"	139
	0340L	Single–Left Hand with Side Hub Inlet		**3,461.00**		2 7/8"	5 3/4"	11 1/2"	6 1/2"	3 1/2"	11 1/2"	10 3/4"	15 3/4	87
	0340R	Single–Right Hand with Side Hub Inlet		**3,461.00**		2 7/8"	5 3/4"	11 1/2"	6 1/2"	3 1/2"	11 1/2"	10 3/4"	15 3/4"	87
	0340D	Double–with Side Hub Inlet		**5,238.00**		2 7/8"	5 3/4"	11 1/2"	6 1/2"	3 1/2"	11 1/2"	10 3/4"	15 3/4	139
	0340L	Single–Left Hand with Side Hub Inlet			**3,969.00**	2 3/4"	5 1/2"	11 1/2"	6 1/4"	4"	11 1/2"	10 3/4"	15 3/4"	87
	0340R	Single–Right Hand with Side Hub Inlet			**3,969.00**	2 3/4"	5 1/2"	11 1/2"	6 1/4"	4"	11 1/2"	10 3/4"	15 3/4"	87
	0340D	Double–with Side Hub Inlet			**5,742.00**	2 3/4"	5 1/2"	11 1/2"	6 1/4"	4"	11 1/2"	10 3/4"	15 3/4"	139
	0350	Single–with Two Side Hub Inlets	**3,208.00**			2 3/4"	5 1/2"	10"	5 1/4"	3"	9"	10 3/4"	15 3/4"	100
	0350D	Double–with Two Side Hub Inlets	**4,970.00**			2 3/4"	5 1/2"	10"	5 1/4"	3"	9"	10 3/4"	15 3/4"	144
	0350	Single–with Two Side Hub Inlets		**3,861.00**		2 7/8"	5 3/4"	11 1/2"	6 1/2"	3 1/2"	11 1/2"	10 3/4"	15 3/4	100
	0350D	Double–with Two Side Hub Inlets		**5,638.00**		2 7/8"	5 3/4"	11 1/2"	6 1/2"	3 1/2"	11 1/2"	10 3/4"	15 3/4"	144
	0350	Single–with Two Side Hub Inlets			**4,368.00**	2 3/4"	5 1/2"	11 1/2"	6 1/4"	4"	11 1/2"	10 3/4"	15 3/4"	100
CAULK	0350D	Double–with Two Side Hub Inlets			**6,144.00**	2 3/4"	5 1/2"	11 1/2"	6 1/4"	4"	11 1/2"	10 3/4"	15 3/4"	144
	0370L	Single–Left Hand with Side Hub Inlet—Long Barrel	**4,033.00**			2 3/4"	5 1/2"	10"	5 1/4"	3"	9"	10 3/4"	15 3/4"	116
	0370R	Single–Right Hand with Side Hub Inlet—Long Barrel	**4,033.00**			2 3/4"	5 1/2"	10"	5 1/4"	3"	9"	10 3/4"	15 3/4"	116
	0370D	Double—with Side Hub Inlet—Long Barrel	**5,796.00**			2 3/4"	5 1/2"	10"	5 1/4"	3"	9"	10 3/4"	15 3/4"	158
	0370L	Single–Left Hand with Side Hub Inlet—Long Barrel		**7,131.00**		2 7/8"	5 3/4"	11 1/2"	6 1/2"	3 1/2"	11 1/2"	10 3/4"	15 3/4"	116
	0370R	Single–Right Hand with Side Hub Inlet—Long Barrel		**7,131.00**		2 7/8"	5 3/4"	11 1/2"	6 1/2"	3 1/2"	11 1/2"	10 3/4"	15 3/4"	116
	0370D	Double—with Side Hub Inlet—Long Barrel		**8,912.00**		2 7/8"	5 3/4"	11 1/2"	6 1/2"	3 1/2"	11 1/2"	10 3/4"	15 3/4"	158
	0370L	Single–Left Hand with Side Hub Inlet—Long Barrel			**8,286.00**	2 3/4"	5 1/2"	11 1/2"	6 1/4"	4"	11 1/2"	10 3/4"	15 3/4"	116
	0370R	Single–Right Hand with Side Hub Inlet—Long Barrel			**8,286.00**	2 3/4"	5 1/2"	11 1/2"	6 1/4"	4"	11 1/2"	10 3/4"	15 3/4"	116
	0370D	Double—with Side Hub Inlet—Long Barrel			**10,062.00**	2 3/4"	5 1/2"	11 1/2"	6 1/4"	4"	11 1/2"	10 3/4"	15 3/4"	158
	0380	Single—with Two Side Hub Inlets—Long Barrel	**4,427.00**			2 3/4"	5 1/2"	10"	5 1/4"	3"	9"	10 3/4"	15 3/4"	119
	0380D	Double—with Two Side Hub Inlets	**6,193.00**			2 3/4"	5 1/2"	10"	5 1/4"	3"	9"	10 3/4"	15 3/4"	163
	0380	Single—with Two Side Hub Inlets—Long Barrel		**7,525.00**		2 7/8"	5 3/4"	11 1/2"	6 1/2"	3 1/2"	11 1/2"	10 3/4"	15 3/4"	119
	0380D	Double—with Two Side Hub Inlets—Long Barrel		**9,306.00**		2 7/8"	5 3/4"	11 1/2"	6 1/2"	3 1/2"	11 1/2"	10 3/4"	15 3/4"	163
	0380	Single—with Two Side Hub Inlets—Long Barrel			**8,678.00**	2 3/4"	5 1/2"	11 1/2"	6 1/4"	4"	11 1/2"	10 3/4"	15 3/4"	119
	0380D	Double—with Two Side Hub Inlets—Long Barrel			**10,458.00**	2 3/4"	5 1/2"	11 1/2"	6 1/4"	4"	11 1/2"	10 3/4"	15 3/4"	163

ADD FOR:

	SINGLE	DOUBLE
Cast Iron or PVC Outlet Nipple & Steel Studs over 12" (**PER INCH**)	**129.00**	**258.00**
Type 2 Female Coupling	**54.00**	**108.00**
Type 2M Male Coupling	**54.00**	**108.00**
M13 Finishing Frame	**104.00**	**208.00**

NOTE: Service weight regularly furnished on fittings above.
NOTE: Always specify fixture manufacturer's model name and number.

†REGULARLY FURNISHED

FIG. 0340Y, 0350Y SERIES VERTICAL FITTINGS FOR BLOWOUT WATER CLOSETS WITH SIDE INLETS

SMITH CUSTOMER DRIVEN SINCE 1926

SINGLE

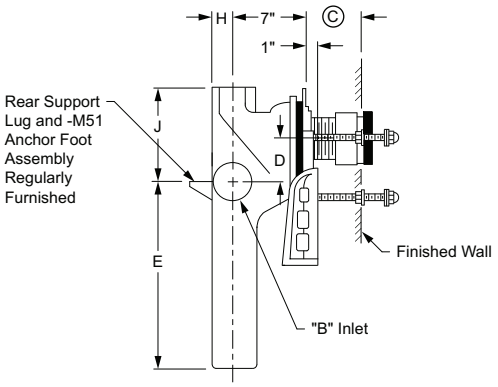

Fig. 0340Y SIDE VIEW

DOUBLE

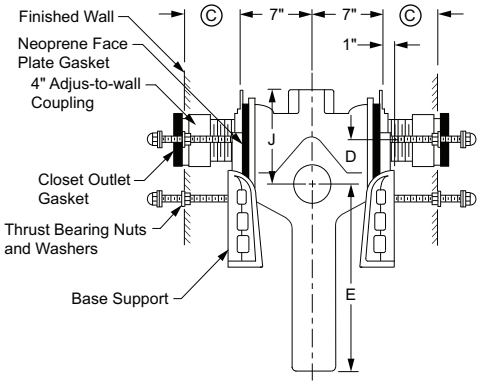

Fig. 0340DY SIDE VIEW

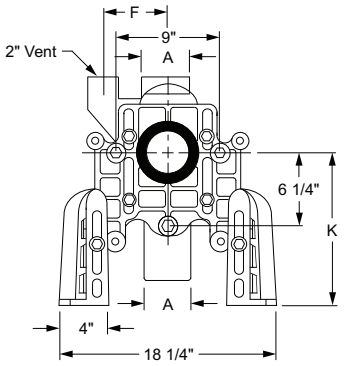

Fig. 0340Y FRONT VIEW

NOTE: Base support must be securely anchored to floor (with four 1/2" bolts provided by contractor).

NOTE: Centerline of stack to end of NO-HUB side inlet in 5".

NOTE: When used with concealed flush valve locate face plate behind supply pipe.

NOTE: © dimension = 4" (regularly furnished) consisting of nipple and Adjus-to-Wall coupling permitting adjustment from 3" min. to 4" max.

NOTE: 1 1/2" or 2" NPT inlet available. Add suffix -N

The water closet gasket regularly furnished is made of molded neoprene and designed to fit water closet outlet dimensions and configurations shown in ANSI Standard A112.19.2M, Figure 13B. If gasket is not found to be compatible to fixture due to nonconformance of said fixture to ANSI A112.19.2M, then fixture manufacturer shall be consulted for a suitable gasket recommendation. Jay R. Smith assumes no liability for connections to fixtures which do not conform to these standards.

OUTLET TYPE	FIGURE NO.	TYPE OF FITTING	†04" X 04"	A X B SIZE 05" X 04" OR 05"	06" X 04"	D MIN	D MAX	E	F	H	J	K MIN	K MAX	APPROX. WT. LBS.
NO-HUB	0340LY	Single–Left Hand with Side Inlet	**2,707.00**			2 3/4"	5 1/2"	10"	5 1/4"	3"	9"	10 3/4"	15 3/4"	76
	0340RY	Single–Right Hand with Side Inlet	**2,707.00**			2 3/4"	5 1/2"	10"	5 1/4"	3"	9"	10 3/4"	15 3/4"	76
	0340DY	Double–with Side Inlet	**4,475.00**			2 3/4"	5 1/2"	10"	5 1/4"	3"	9"	10 3/4"	15 3/4"	122
	0340LY	Single–Left Hand with Side Inlet		**3,259.00**		2 7/8"	5 3/4"	11 1/2"	6 1/2"	3 1/2"	11 1/2"	10 3/4"	15 3/4"	76
	0340RY	Single–Right Hand with Side Inlet		**3,259.00**		2 7/8"	5 3/4"	11 1/2"	6 1/2"	3 1/2"	11 1/2"	10 3/4"	15 3/4"	76
	0340DY	Double–with Side Inlet		**4,974.00**		2 7/8"	5 3/4"	11 1/2"	6 1/2"	3 1/2"	11 1/2"	10 3/4"	15 3/4"	122
	0340LY	Single–Left Hand with Side Inlet			**3,749.00**	2 3/4"	5 1/2"	11 1/2"	6 1/4"	4"	11 1/2"	10 3/4"	15 3/4"	76
	0340RY	Single–Right Hand with Side Inlet			**3,749.00**	2 3/4"	5 1/2"	11 1/2"	6 1/4"	4"	11 1/2"	10 3/4"	15 3/4"	76
	0340DY	Double–with Side Inlet			**5,468.00**	2 3/4"	5 1/2"	11 1/2"	6 1/4"	4"	11 1/2"	10 3/4"	15 3/4"	122
	0350Y	Single–with Two Side Inlets	**3,108.00**			2 3/4"	5 1/2"	10"	5 1/4"	3"	9"	10 3/4"	15 3/4"	76
	0350DY	Double–with Two Side Inlets	**4,870.00**			2 3/4"	5 1/2"	10"	5 1/4"	3"	9"	10 3/4"	15 3/4"	122
	0350Y	Single–with Two Side Inlets		**3,641.00**		2 7/8"	5 3/4"	11 1/2"	6 1/2"	3 1/2"	11 1/2"	10 3/4"	15 3/4"	76
	0350DY	Double–with Two Side Inlets		**5,350.00**		2 7/8"	5 3/4"	11 1/2"	6 1/2"	3 1/2"	11 1/2"	10 3/4"	15 3/4"	122
	0350Y	Single–with Two Side Inlets			**4,095.00**	2 3/4"	5 1/2"	11 1/2"	6 1/4"	4"	11 1/2"	10 3/4"	15 3/4"	76
	0350DY	Double–with Two Side Inlets			**5,846.00**	2 3/4"	5 1/2"	11 1/2"	6 1/4"	4"	11 1/2"	10 3/4"	15 3/4"	122

ADD FOR:

	SINGLE	DOUBLE
Cast Iron or PVC Outlet Nipple & Steel Studs over 12" (**PER INCH**)	**129.00**	**258.00**
Type 2 Female Coupling	**54.00**	**108.00**
Type 2M Male Coupling	**54.00**	**108.00**
M13 Finishing Frame	**104.00**	**208.00**

NOTE: Service weight regularly furnished on fittings above.
NOTE: Always specify fixture manufacturer's model name and number.

†REGULARLY FURNISHED

FIXTURE SUPPORTS

FIG. 0375, 0385 SERIES VERTICAL FITTINGS WITH SIDE INLETS FOR ELEVATED BLOWOUT WATER CLOSETS FOR WHEELCHAIR USERS

SINGLE

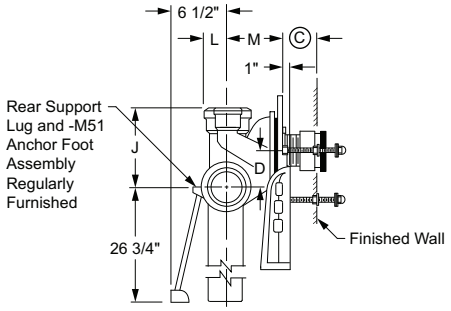

Fig. 0375
SIDE VIEW

DOUBLE

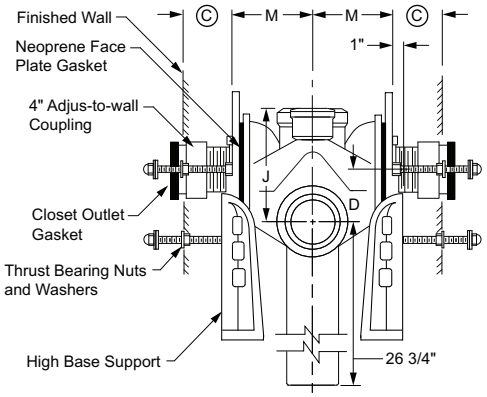

Fig. 0375D
SIDE VIEW

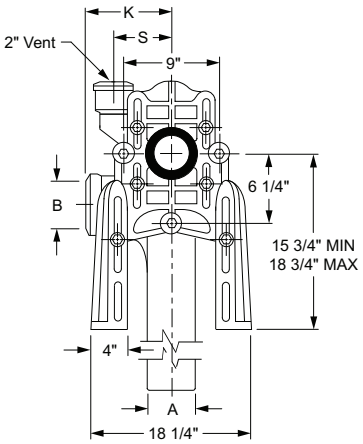

Fig. 0375
FRONT VIEW

NOTE: Base support must be securely anchored to floor (with four 1/2" bolts provided by contractor).

NOTE: 1 1/2" or 2" NPT inlet available. Add suffix -N

NOTE: When used with concealed flush valve locate face plate behind supply pipe.

NOTE: © dimension = 4" (regularly furnished) consisting of nipple and Adjus-to-Wall coupling permitting adjustment from 3" min. to 4" max.

The water closet gasket regularly furnished is made of molded neoprene and designed to fit water closet outlet dimensions and configurations shown in ANSI Standard A112.19.2M, Figure 13B. If gasket is not found to be compatible to fixture due to nonconformance of said fixture to ANSI A112.19.2M, then fixture manufacturer shall be consulted for a suitable gasket recommendation. Jay R. Smith assumes no liability for connections to fixtures which do not conform to these standards.

OUTLET TYPE	FIGURE NO.	TYPE OF FITTING	A X B SIZE †04" X 04"	D MIN	D MAX	J	K	L	M	S	APPROX. WT. LBS.
CAULK	0375L	Single–Left Hand Hi-set with Side Inlet	**4,331.00**	4 3/4"	8 3/4"	12 1/8"	7 1/2"	3"	7"	5 1/4"	110
	0375R	Single–Right Hand Hi-set with Side Inlet	**4,331.00**	4 3/4"	8 3/4"	12 1/8"	7 1/2"	3"	7"	5 1/4"	110
	0375D	Double– Hi-set with Side Inlet	**6,239.00**	4 3/4"	8 3/4"	12 1/8"	7 1/2"	3"	7"	5 1/4"	111
	0385	Single–Hi-set with Two Side Inlets	**4,722.00**	4 3/4"	8 3/4"	12 1/8"	7 1/2"	3"	7"	5 1/4"	50
	0385D	Double–Hi-set with Two Side Inlets	**6,508.00**	4 3/4"	8 3/4"	12 1/8"	7 1/2"	3"	7"	5 1/4"	141
NO-HUB	0375LY	Single–Left Hand Hi-set with Side Inlet	**4,331.00**	4 3/4"	8 3/4"	-	-	-	-	-	110
	0375RY	Single–Right Hand Hi-set with Side Inlet	**4,331.00**	4 3/4"	8 3/4"	-	-	-	-	-	110
	0375DY	Double– Hi-set with Side Inlet	**6,239.00**	4 3/4"	8 3/4"	-	-	-	-	-	111
	0385Y	Single–Hi-set with Two Side Inlets	**4,722.00**	4 3/4"	8 3/4"	-	-	-	-	-	50
	0385DY	Double–Hi-set with Two Side Inlets	**6,508.00**	4 3/4"	8 3/4"	-	-	-	-	-	141

ADD FOR:

	SINGLE	DOUBLE
Cast Iron or PVC Outlet Nipple & Steel Studs over 12" (**PER INCH**)	**129.00**	**258.00**
Type 2 Female Coupling	**54.00**	**108.00**
Type 2M Male Coupling	**54.00**	**108.00**
M13 Finishing Frame	**104.00**	**208.00**

NOTE: Service weight regularly furnished on fittings above.
NOTE: Always specify fixture manufacturer's model name and number.

†REGULARLY FURNISHED

FIG. 0410, 0411, 0417, 0419 SERIES COMPACT FIXTURE SUPPORTS WITH VERTICAL OFFSET FITTINGS FOR SIPHON JET WATER CLOSETS

SINGLE

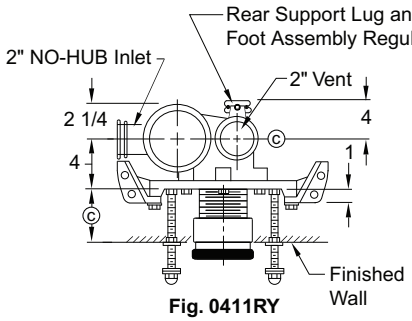

Fig. 0411RY TOP VIEW

DOUBLE

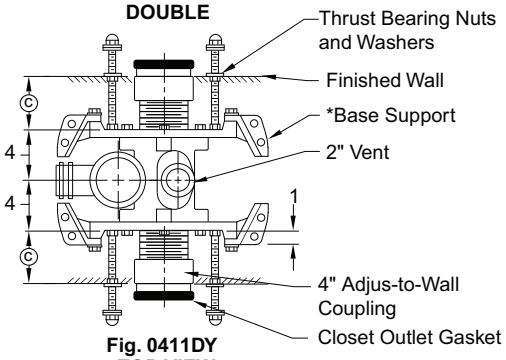

Fig. 0411DY TOP VIEW

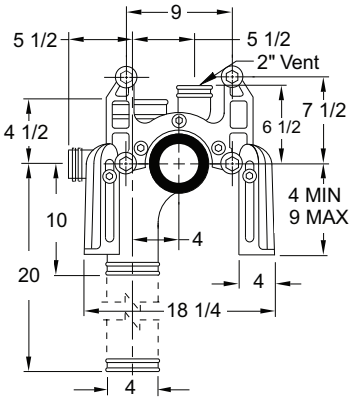

FRONT VIEW

***NOTE:** Base support must be securely anchored to floor (with four 1/2" bolts provided by contractor).

NOTE: When used with concealed flush valve locate face plate behind supply pipe.

NOTE: © dimension = 4" (regularly furnished) consisting of nipple and Adjus-to-Wall coupling permitting adjustment from 3" min. to 4" max.

The water closet gasket regularly furnished is made of molded neoprene and designed to fit water closet outlet dimensions and configurations shown in ANSI Standard A112.19.2M, Figure 13B. If gasket is not found to be compatible to fixture due to nonconformance of said fixture to ANSI A112.19.2M, then fixture manufacturer shall be consulted for a suitable gasket recommendation. Jay R. Smith assumes no liability for connections to fixtures which do not conform to these standards.

OUTLET TYPE	FIGURE NO.	TYPE OF FITTING	A SIZE †04"*	APPROX. WT. LBS.
CAULK	0410L	Single Left Hand	**1,835.00**	70
	0410R	Single Right Hand	**1,835.00**	70
	0410D	Double	**3,143.00**	70
	0417L	Single Left Hand—Long Barrel	**1,835.00**	70
	0417R	Single Right Hand—Long Barrel	**1,835.00**	70
	0417D	Double—Long Barrel	**3,143.00**	96
	0419L	Single–Left Hand with One Sanitary Inlet—Long Barrel	**3,622.00**	79
	0419R	Single–Right Hand with One Sanitary Inlet—Long Barrel	**3,622.00**	79
	0419D	Double with One Sanitary Inlet—Long Barrel	**4,933.00**	96
NO-HUB	0410LY	Single Left Hand	**1,835.00**	70
	0410RY	Single Right Hand	**1,835.00**	70
	0410DY	Double	**3,143.00**	70
	0411LY	Single–Left Hand with One Sanitary Inlet	**2,303.00**	56
	0411RY	Single–Right Hand with One Sanitary Inlet	**2,303.00**	56
	0411DY	Double with One Sanitary Inlet	**3,612.00**	82
	0417LY	Single Left Hand—Long Barrel	**1,835.00**	70
	0417RY	Single Right Hand—Long Barrel	**1,835.00**	70
	0417DY	Double—Long Barrel	**3,143.00**	96
	0419LY	Single–Left Hand with One Sanitary Inlet—Long Barrel	**2,299.00**	52
	0419RY	Single–Right Hand with One Sanitary Inlet—Long Barrel	**2,299.00**	52
	0419DY	Double–with One Sanitary Inlet—Long Barrel	**3,608.00**	82

*Add $465.00 for each additional auxiliary tapping.

	ADD FOR: SINGLE	DOUBLE
Cast Iron or PVC Outlet Nipple & Steel Studs over 12" (**PER INCH**)	**129.00**	**258.00**
Type 2 Female Coupling	**54.00**	**108.00**
Type 2M Male Coupling	**54.00**	**108.00**
M13 Finishing Frame	**104.00**	**208.00**

NOTE: Service weight regularly furnished on fittings above.
NOTE: Always specify fixture manufacturer's model name and number.

†REGULARLY FURNISHED

FIG. 0415Y VERTICAL OFFSET FITTINGS FOR SIPHON JET WATER CLOSETS WITH SANITARY INLET

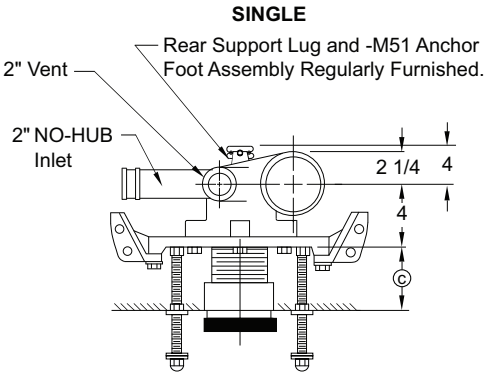

Fig. 0415LY
TOP VIEW

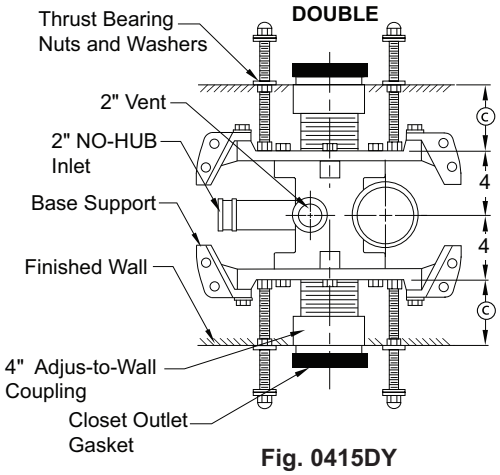

Fig. 0415DY
TOP VIEW

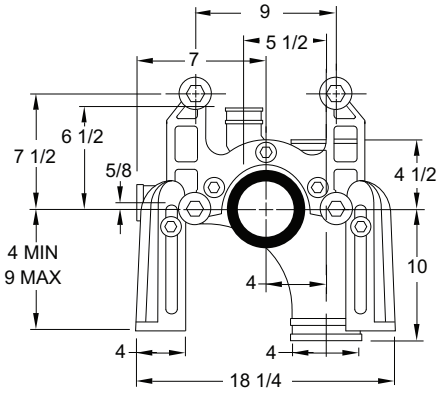

FRONT VIEW

NOTE: Base support must be securely anchored to floor (with four 1/2" bolts provided by contractor).

NOTE: When used with concealed flush valve locate face plate behind supply pipe.

NOTE: © dimension = 4" (regularly furnished) consisting of nipple and Adjus-to-Wall coupling permitting adjustment from 3" min. to 4" max.

NOTE: Side inlet 1 1/2" or 2" N.P.T. or 2" caulk (specify type and size).

The water closet gasket regularly furnished is made of molded neoprene and designed to fit water closet outlet dimensions and configurations shown in ANSI Standard A112.19.2M, Figure 13B. If gasket is not found to be compatible to fixture due to nonconformance of said fixture to ANSI A112.19.2M, then fixture manufacturer shall be consulted for a suitable gasket recommendation. Jay R. Smith assumes no liability for connections to fixtures which do not conform to these standards.

OUTLET TYPE	FIGURE NO.	TYPE OF FITTING	STACK SIZE †04"*	APPROX. WT. LBS.
NO-HUB	0415LY	Single–Left Hand with One Sanitary Inlet	**2,303.00**	77
	0415RY	Single–Right Hand with One Sanitary Inlet	**2,303.00**	77
	0415DY	Double–with One Sanitary Inlet	**3,612.00**	101

*Add $465.00 for each additional auxiliary tapping.

	ADD FOR: SINGLE	DOUBLE
Cast Iron or PVC Outlet Nipple & Steel Studs over 12" (**PER INCH**)	**129.00**	**258.00**
Type 2 Female Coupling	**54.00**	**108.00**
Type 2M Male Coupling	**54.00**	**108.00**
M13 Finishing Frame	**104.00**	**208.00**

NOTE: Service weight regularly furnished on fittings above.
NOTE: Always specify fixture manufacturer's model name and number.

†REGULARLY FURNISHED

FIG. 0416Y VERTICAL FITTINGS FOR SIPHON JET WATER CLOSETS WITH SIDE INLET - RESIDENTIAL

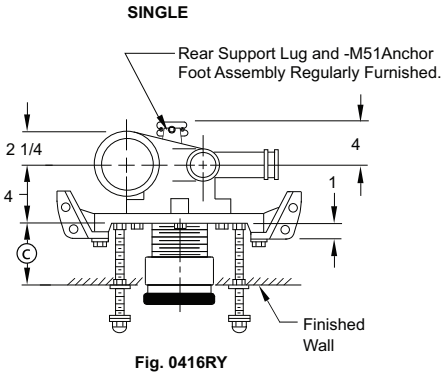

Fig. 0416RY
TOP VIEW

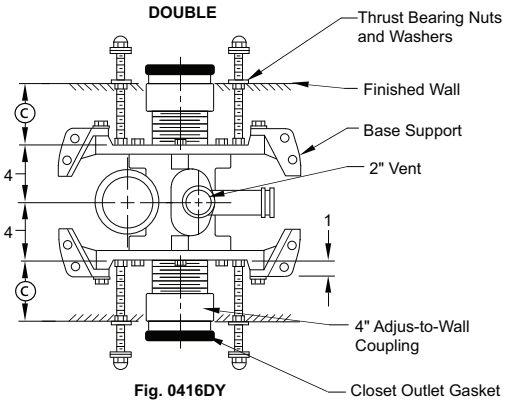

Fig. 0416DY
TOP VIEW

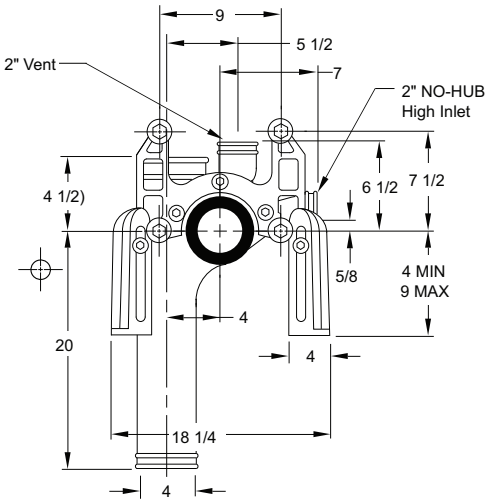

FRONT VIEW

NOTE: Base support must be securely anchored to floor (with four 1/2" bolts provided by contractor).

NOTE: When used with concealed flush valve locate face plate behind supply pipe.

NOTE: © dimension = 4" (regularly furnished) consisting of nipple and Adjus-to-Wall coupling permitting adjustment from 3" min. to 4" max.

The water closet gasket regularly furnished is made of molded neoprene and designed to fit water closet outlet dimensions and configurations shown in ANSI Standard A112.19.2M, Figure 13B. If gasket is not found to be compatible to fixture due to nonconformance of said fixture to ANSI A112.19.2M, then fixture manufacturer shall be consulted for a suitable gasket recommendation. Jay R. Smith assumes no liability for connections to fixtures which do not conform to these standards.

OUTLET TYPE	FIGURE NO.	TYPE OF FITTING	A SIZE †04"**	APPROX. WT. LBS.
NO-HUB	0416LY	Single–Left Hand with One High Sanitary Inlet on Vent Side	**2,537.00**	53
	0416RY	Single–Right Hand with One High Sanitary Inlet on Vent Side	**2,537.00**	53
	0416DY	Double–with One High Sanitary Inlet on Vent Side	**3,849.00**	82

*Service Weight sized for No Hub. **Add $465.00 for each additional auxiliary tapping.

	ADD FOR: SINGLE	DOUBLE
Cast Iron or PVC Outlet Nipple & Steel Studs over 12" (**PER INCH**)	**129.00**	**258.00**
Type 2 Female Coupling	**54.00**	**108.00**
Type 2M Male Coupling	**54.00**	**108.00**
M13 Finishing Frame	**104.00**	**208.00**

NOTE: Service weight regularly furnished on fittings above.
NOTE: Always specify fixture manufacturer's model name and number.

†REGULARLY FURNISHED

FIG. 0430, 0437 VERTICAL OFFSET FITTINGS FOR BLOWOUT WATER CLOSETS

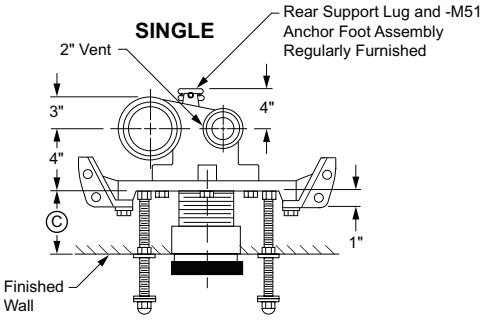

Fig. 0430
TOP VIEW

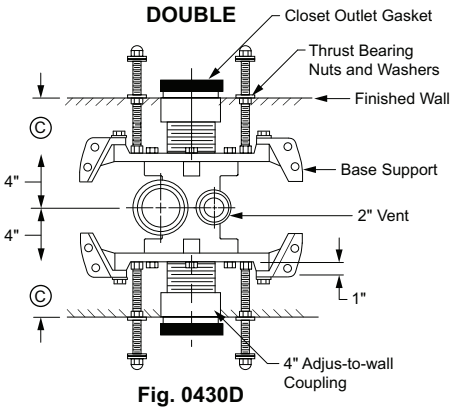

Fig. 0430D
TOP VIEW

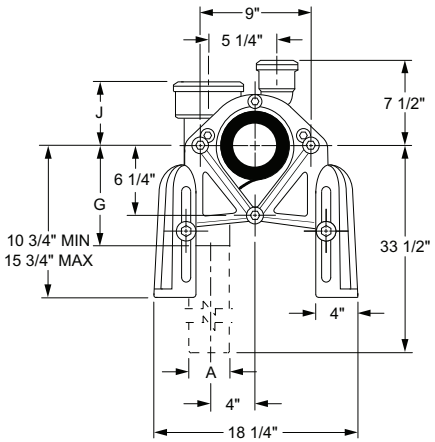

Fig. 0430
FRONT VIEW

NOTE: Base support must be securely anchored to floor (with four 1/2" bolts provided by contractor).

NOTE: When used with concealed flush valve locate face plate behind supply pipe.

NOTE: © dimension = 4" (regularly furnished) consisting of nipple and Adjus-to-Wall coupling permitting adjustment from 3" min. to 4" max.

OUTLET TYPE	FIGURE NO.	TYPE OF FITTING	A SIZE †04"*	G	J	APPROX. WT. LBS.
CAULK	0430L	Single–Left Hand	**1,835.00**	8"	5 1/2"	70
	0430R	Single–Right Hand	**1,835.00**	8"	5 1/2"	70
	0430D	Double	**3,143.00**	8"	5 1/2"	70
	0437L	Single–Left Hand—Long Barrel	**1,835.00**	8"	5 1/2"	70
	0437R	Single–Right Hand—Long Barrel	**1,835.00**	8"	5 1/2"	70
NO-HUB	0430LY	Single–Left Hand	**1,835.00**	10"	4 1/2"	70
	0430RY	Single–Right Hand	**1,835.00**	10"	4 1/2"	70
	0430DY	Double	**3,143.00**	10"	4 1/2"	70
	0437LY	Single–Left Hand—Long Barrel	**1,835.00**	10"	4 1/2"	70
	0437RY	Single–Right Hand—Long Barrel	**1,835.00**	10"	4 1/2"	70
	0437DY	Double—Long Barrel	**3,143.00**	10"	4 1/2"	96

*Add $465.00 for each additional auxiliary tapping.

	ADD FOR: SINGLE	DOUBLE
Cast Iron or PVC Outlet Nipple & Steel Studs over 12" (**PER INCH**)	**129.00**	**258.00**
Type 2 Female Coupling	**54.00**	**108.00**
Type 2M Male Coupling	**54.00**	**108.00**
M13 Finishing Frame	**104.00**	**208.00**

NOTE: Service weight regularly furnished on fittings above.
NOTE: Always specify fixture manufacturer's model name and number.

†REGULARLY FURNISHED

FIG. 0431 VERTICAL OFFSET FITTINGS FOR BLOWOUT WATER CLOSETS WITH SANITARY SWEEP INLET

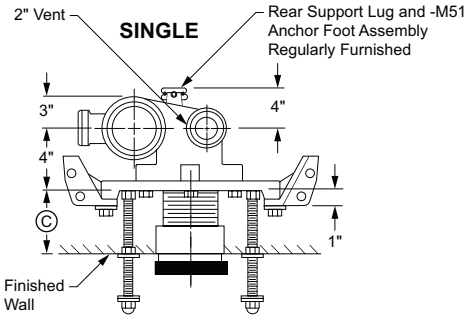

Fig. 0431
TOP VIEW

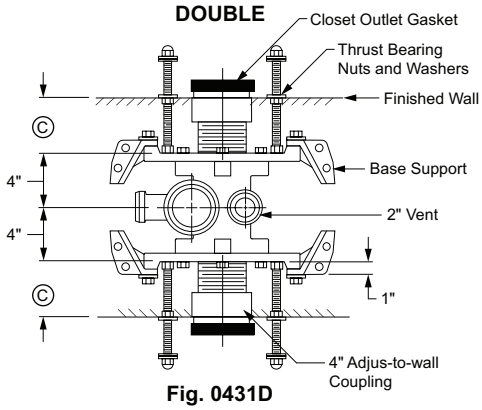

Fig. 0431D
TOP VIEW

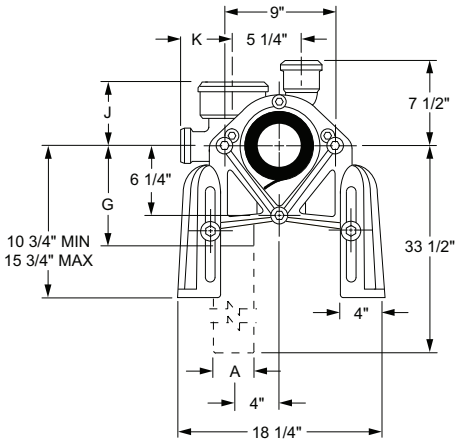

Fig. 0431
FRONT VIEW

NOTE: Base support must be securely anchored to floor (with four 1/2" bolts provided by contractor).

NOTE: When used with concealed flush valve locate face plate behind supply pipe.

NOTE: © dimension = 4" (regularly furnished) consisting of nipple and Adjus-to-Wall coupling permitting adjustment from 3" min. to 4" max.

NOTE: Side inlet 1 1/2" or 2" N.P.T. or 2" caulk (specify type and size)

OUTLET TYPE	FIGURE NO.	TYPE OF FITTING	A SIZE †04"*	G	J	K	APPROX. WT. LBS.
CAULK	0431L	Single–Left Hand with One Sanitary Inlet	**2,303.00**	8"	5 1/2"	7"	56
	0431R	Single–Right Hand with One Sanitary Inlet	**2,303.00**	8"	5 1/2"	7"	56
	0431D	Double with One Sanitary Inlet	**3,612.00**	8"	5 1/2"	7"	82
NO-HUB	0431LY	Single–Left Hand with One Sanitary Inlet	**2,303.00**	8"	4 1/2"	5 1/2"	56
	0431RY	Single–Right Hand with One Sanitary Inlet	**2,303.00**	8"	4 1/2"	5 1/2"	56
	0431DY	Double with One Sanitary Inlet	**3,612.00**	8"	4 1/2"	5 1/2"	82

*Add $465.00 for each additional auxiliary tapping.

	ADD FOR: SINGLE	DOUBLE
Cast Iron or PVC Outlet Nipple & Steel Studs over 12" (**PER INCH**)	**129.00**	**258.00**
Type 2 Female Coupling	**54.00**	**108.00**
Type 2M Male Coupling	**54.00**	**108.00**
M13 Finishing Frame	**104.00**	**208.00**

NOTE: Service weight regularly furnished on fittings above.
NOTE: Always specify fixture manufacturer's model name and number.

†REGULARLY FURNISHED

FIG. 0440, 0447, 0450, 0457 SERIES HUB & SPIGOT VERTICAL CENTER LINE FITTINGS FOR SIPHON JET WATER CLOSETS

SINGLE

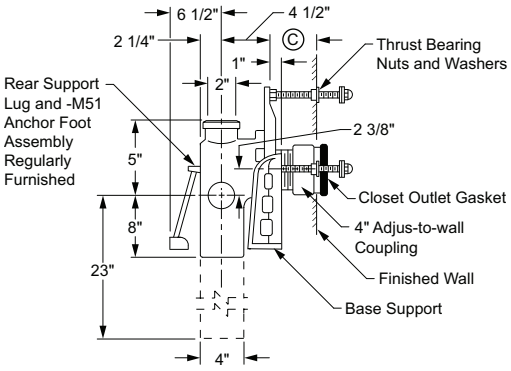

Fig. 0440
SIDE VIEW

SINGLE

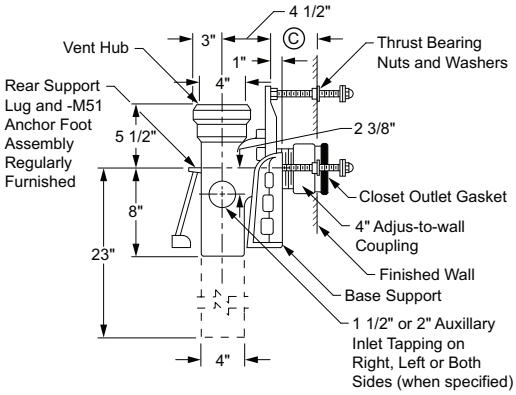

Fig. 0450
SIDE VIEW

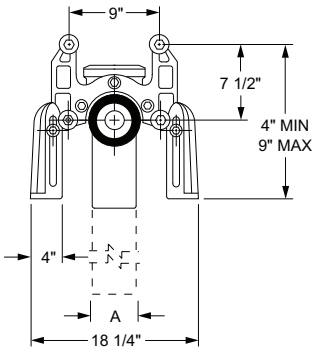

Fig. 0440, 0450
FRONT VIEW

NOTE: Base support must be securely anchored to floor (with four 1/2" bolts provided by contractor).

NOTE: When used with concealed flush valve locate face plate behind supply pipe.

NOTE: © dimension = 4" (regularly furnished) consisting of nipple and Adjus-to-Wall coupling permitting adjustment from 3" min. to 4" max.

OUTLET TYPE	FIGURE NO.	TYPE OF FITTING	A SIZE †04"*	APPROX. WT. LBS.
CAULK	0440	Single–with Vent–Short Barrel	**1,835.00**	38
	0447	Single–with 2" Vent–Long Barrel	**1,835.00**	58
	0450	Single–with 4" Vent–Short Barrel	**1,835.00**	41
	0457	Single–with 4" Vent–Long Barrel	**1,835.00**	61

*Add $465.00 for each additional auxiliary tapping.

	ADD FOR: SINGLE	DOUBLE
Cast Iron or PVC Outlet Nipple & Steel Studs over 12" (**PER INCH**)	**129.00**	**258.00**
Type 2 Female Coupling	**54.00**	**108.00**
Type 2M Male Coupling	**54.00**	**108.00**
M13 Finishing Frame	**104.00**	**208.00**

NOTE: Service weight regularly furnished on fittings above.
NOTE: Always specify fixture manufacturer's model name and number.

†REGULARLY FURNISHED

FIG. 0440Y, 0447Y, 0450Y, 0457Y SERIES VERTICAL CENTER LINE FITTINGS FOR SIPHON JET WATER CLOSETS

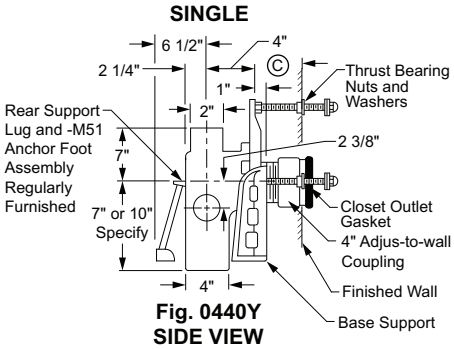

Fig. 0440Y
SIDE VIEW

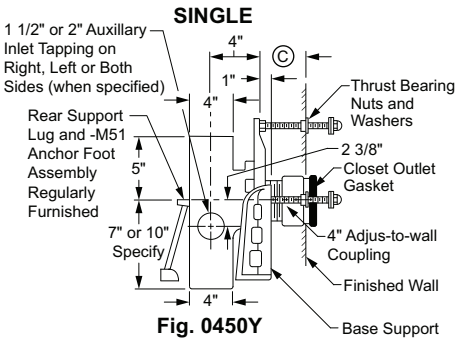

Fig. 0450Y
SIDE VIEW

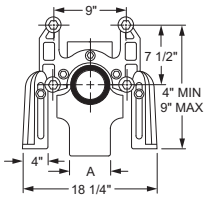

Fig. 0440Y, 0450Y
FRONT VIEW

OUTLET TYPE	FIGURE NO.	TYPE OF FITTING	A SIZE †04"*	APPROX. WT. LBS.
NO-HUB	0440Y	Single–with 2" Vent–Short Barrel	**1,835.00**	38
	0447Y	Single–with 2" Vent–Long Barrel	**1,835.00**	58
	0450Y	Single–with 4" Vent–Short Barrel	**1,835.00**	41
	0457Y	Single–with 4" Vent–Long Barrel	**1,835.00**	61

*Add $465.00 for each additional auxiliary tapping.

NOTE: Base support must be securely anchored to floor (with four 1/2" bolts provided by contractor).

NOTE: When used with concealed flush valve locate face plate behind supply pipe.

NOTE: © dimension = 4" (regularly furnished) consisting of nipple and Adjus-to-Wall coupling permitting adjustment from 3" min. to 4" max.

NOTE: When required a 2" NO-HUB Aux. Inlet adaptor is available. Specify Suffix -NY

	ADD FOR: SINGLE	DOUBLE
Cast Iron or PVC Outlet Nipple & Steel Studs over 12" (**PER INCH**)	**129.00**	**257.00**
Type 2 Female Coupling	**54.00**	**108.00**
Type 2M Male Coupling	**54.00**	**108.00**
M13 Finishing Frame	**104.00**	**207.00**

FIG. 0444, 0444Y, VERTICAL CENTER LINE FITTINGS FOR SIPHON JET WATER CLOSETS AT RIGHT ANGLES

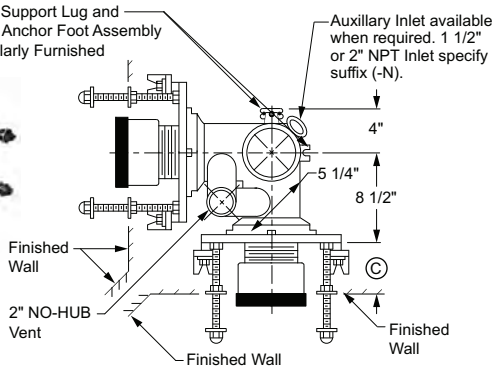

Fig. 0444Y
TOP VIEW

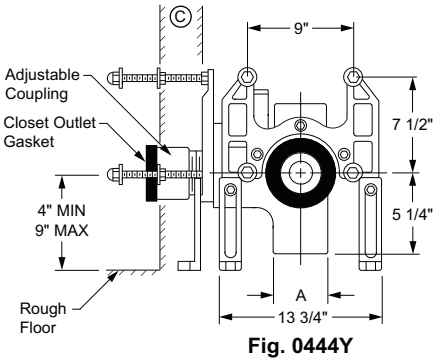

Fig. 0444Y
FRONT VIEW

120º Angle Support Available, Contact Smith Sales Engineering Dept.

NOTE: Base support must be securely anchored to floor (with four 1/2" bolts provided by contractor).

NOTE: When used with concealed flush valve locate face plate behind supply pipe.

NOTE: © dimension = 4" (regularly furnished) consisting of nipple and Adjus-to-Wall coupling permitting adjustment from 3" min. to 4" max.

OUTLET TYPE	FIGURE NO.	TYPE OF FITTING	A SIZE †04"*	APPROX. WT. LBS.
CAULK	0444	Double–90° with 2" Vent–Short Barrel	**5,563.00**	77
NO-HUB	0444Y	Double–90° with 2" Vent–Short Barrel	**5,563.00**	77

*Add $465.00 for each additional auxiliary tapping.

	ADD FOR: SINGLE	DOUBLE
Cast Iron or PVC Outlet Nipple & Steel Studs over 12" (**PER INCH**)	**129.00**	**258.00**
Type 2 Female Coupling	**54.00**	**108.00**
Type 2M Male Coupling	**54.00**	**108.00**
M13 Finishing Frame	**104.00**	**208.00**

The water closet gasket regularly furnished is made of molded neoprene and designed to fit water closet outlet dimensions and configurations shown in ANSI Standard A112.19.2M, Figure 13B. If gasket is not found to be compatible to fixture due to nonconformance of said fixture to ANSI A112.19.2M, then fixture manufacturer shall be consulted for a suitable gasket recommendation. Jay R. Smith assumes no liability for connections to fixtures which do not conform to these standards.

NOTE: Service weight regularly furnished on fittings above.
NOTE: Always specify fixture manufacturer's model name and number.

†REGULARLY FURNISHED

FIG. 0480, 0490 VERTICAL CENTER LINE FITTINGS FOR BLOWOUT WATER CLOSETS

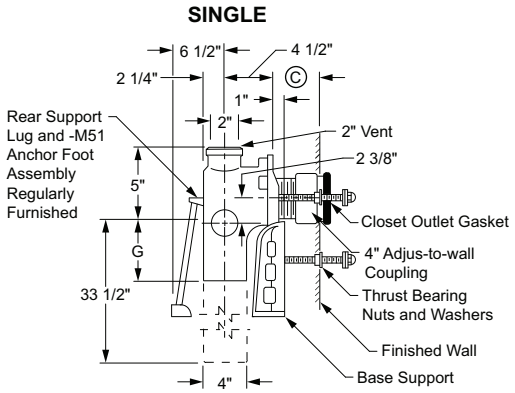

Fig. 0480
SIDE VIEW

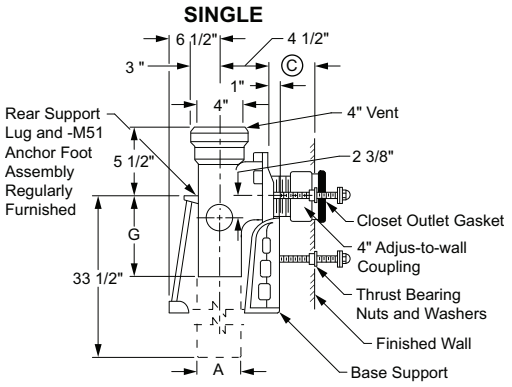

Fig. 0490
SIDE VIEW

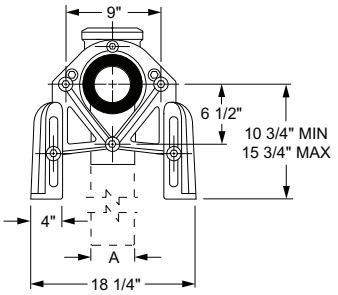

Fig. 0490
FRONT VIEW

OUTLET TYPE	FIGURE NO.	TYPE OF FITTING	A SIZE †04"*	G	APPROX. WT. LBS.
CAULK	0480	Single–with 2" Vent–Short Barrel	**1,835.00**	8"	38
	0490	Single–with 4" Vent–Short Barrel	**1,835.00**	8"	41
NO-HUB	0480Y	Single–with 2" Vent–Short Barrel	**1,835.00**	10"	38
	0490Y	Single–with 4" Vent–Short Barrel	**1,835.00**	10"	41

*Add $465.00 for each additional auxiliary tapping.

The water closet gasket regularly furnished is made of molded neoprene and designed to fit water closet outlet dimensions and configurations shown in ANSI Standard A112.19.2M, Figure 13B. If gasket is not found to be compatible to fixture due to nonconformance of said fixture to ANSI A112.19.2M, then fixture manufacturer shall be consulted for a suitable gasket recommendation. Jay R. Smith assumes no liability for connections to fixtures which do not conform to these standards.

NOTE: Base support must be securely anchored to floor (with four 1/2" bolts provided by contractor).

NOTE: When used with concealed flush valve locate face plate behind supply pipe.

NOTE: © dimension = 4" (regularly furnished) consisting of nipple and Adjus-to-Wall coupling permitting adjustment from 3" min. to 4" max.

NOTE: Side inlet 1 1/2" or 2" N.P.T. or 2" caulk (specify type and size).

ADD FOR:

	SINGLE	DOUBLE
Cast Iron or PVC Outlet Nipple & Steel Studs over 12" (**PER INCH**)	**129.00**	**257.00**
Type 2 Female Coupling	**54.00**	**108.00**
Type 2M Male Coupling	**54.00**	**108.00**
M13 Finishing Frame	**104.00**	**207.00**

FIG. 0484, 0484Y, VERTICAL CENTER LINE FITTINGS FOR BLOWOUT WATER CLOSETS AT RIGHT ANGLES

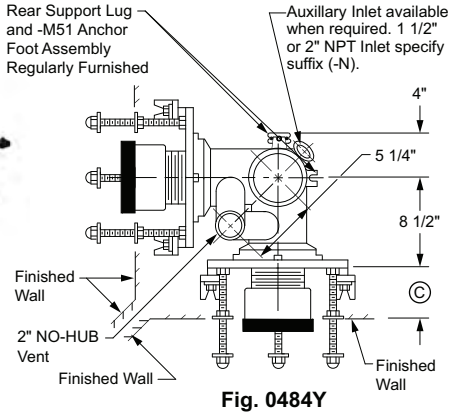

Fig. 0484Y
TOP VIEW

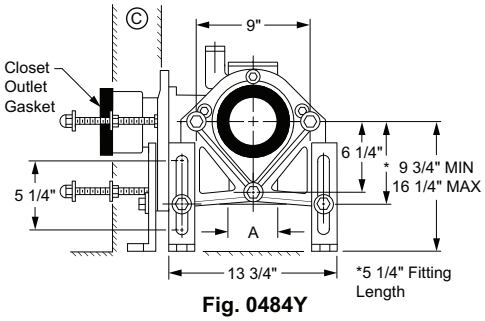

Fig. 0484Y
FRONT VIEW

120° Angle Support Available, Contact Smith Sales Engineering Dept.

NOTE: Base support must be securely anchored to floor (with four 1/2" bolts provided by contractor).

NOTE: When used with concealed flush valve locate face plate behind supply pipe.

NOTE: © dimension = 4" (regularly furnished) consisting of nipple and Adjus-to-Wall coupling permitting adjustment from 3" min. to 4" max.

OUTLET TYPE	FIGURE NO.	TYPE OF FITTING	A SIZE †04"*	APPROX. WT. LBS.
CAULK	0484	Double–90° with 2" Vent–Short Barrel	**5,563.00**	77
NO-HUB	0484Y	Double–90° with 2" Vent–Short Barrel	**5,563.00**	77

*Add $465.00 for each additional auxiliary tapping.

ADD FOR:

	SINGLE	DOUBLE
Cast Iron or PVC Outlet Nipple & Steel Studs over 12" (**PER INCH**)	**129.00**	**258.00**
Type 2 Female Coupling	**54.00**	**108.00**
Type 2M Male Coupling	**54.00**	**108.00**
M13 Finishing Frame	**104.00**	**208.00**

The water closet gasket regularly furnished is made of molded neoprene and designed to fit water closet outlet dimensions and configurations shown in ANSI Standard A112.19.2M, Figure 13B. If gasket is not found to be compatible to fixture due to nonconformance of said fixture to ANSI A112.19.2M, then fixture manufacturer shall be consulted for a suitable gasket recommendation. Jay R. Smith assumes no liability for connections to fixtures which do not conform to these standards.

NOTE: Service weight regularly furnished on fittings above.
NOTE: Always specify fixture manufacturer's model name and number.

†REGULARLY FURNISHED

FIG. 0487, 0487Y, 0497, 0497Y SERIES VERTICAL CENTER LINE FITTINGS FOR BLOWOUT WATER CLOSETS

SMITH CUSTOMER DRIVEN SINCE 1926

SINGLE

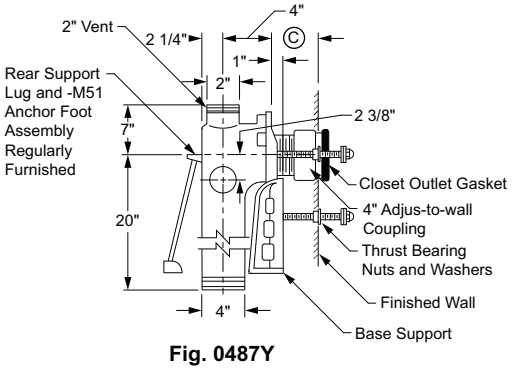

Fig. 0487Y
SIDE VIEW

SINGLE

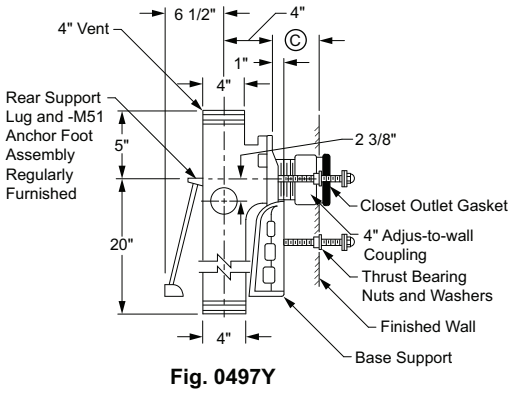

Fig. 0497Y
SIDE VIEW

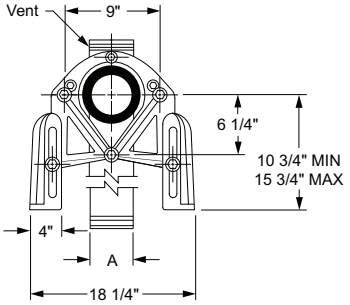

Fig. 0487Y, 0497Y
FRONT VIEW

NOTE: Base support must be securely anchored to floor (with four 1/2" bolts provided by contractor).

NOTE: When used with concealed flush valve locate face plate behind supply pipe.

NOTE: © dimension = 4" (regularly furnished) consisting of nipple and Adjus-to-Wall coupling permitting adjustment from 3" min. to 4" max.

NOTE: Side inlet 1 1/2" or 2" N.P.T. or 2" caulk (specify type and size).

NOTE: When required a 2" NO-HUB Aux. Inlet adaptor is available. Specify Suffix -NY

The water closet gasket regularly furnished is made of molded neoprene and designed to fit water closet outlet dimensions and configurations shown in ANSI Standard A112.19.2M, Figure 13B. If gasket is not found to be compatible to fixture due to nonconformance of said fixture to ANSI A112.19.2M, then fixture manufacturer shall be consulted for a suitable gasket recommendation. Jay R. Smith assumes no liability for connections to fixtures which do not conform to these standards.

OUTLET TYPE	FIGURE NO.	TYPE OF FITTING	A SIZE †04"*	APPROX. WT. LBS.
CAULK	0487	Single–with 2" Vent–Long Barrel	**1,835.00**	58
	0497	Single–with 4" Vent–Long Barrel	**1,835.00**	61
NO-HUB	0487Y	Single–with 2" Vent–Long Barrel	**1,835.00**	58
	0497Y	Single–with 4" Vent–Long Barrel	**1,835.00**	61

*Add $465.00 for each additional auxiliary tapping.

	ADD FOR: SINGLE	DOUBLE
Cast Iron or PVC Outlet Nipple & Steel Studs over 12" (**PER INCH**)	**129.00**	**258.00**
Type 2 Female Coupling	**54.00**	**108.00**
Type 2M Male Coupling	**54.00**	**108.00**
M13 Finishing Frame	**104.00**	**208.00**

NOTE: Service weight regularly furnished on fittings above.
NOTE: Always specify fixture manufacturer's model name and number.

†REGULARLY FURNISHED

FIXTURE SUPPORTS

FIG. 0532, 0533, 0542, 0544, RESIDENTIAL FIXTURE SUPPORTS FOR SIPHON JET WATER CLOSETS WITH VERTICAL CENTER LINE FITTINGS

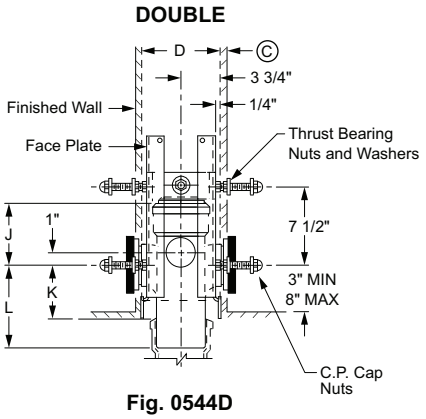

Fig. 0544D
SIDE VIEW

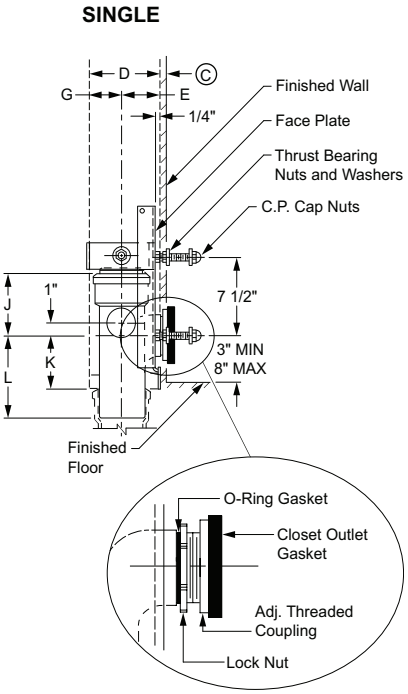

Fig. 0544
SIDE VIEW

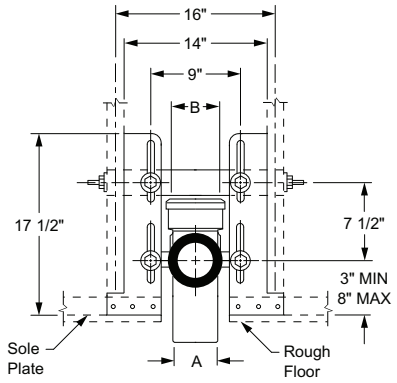

Fig. 0544
FRONT VIEW

OPTIONS:		ADD
-C06	6 3/4" Coupling (Adjusts from 4" to 6")	**220.00**
-C10	10" Coupling (Adjusts from 7" to 10")	**514.00**
-C14	14" Coupling (Adjusts from 11" to 14")	**808.00**

NOTE: Coupling should extend 5/16" beyond finished wall.

NOTE: Longer closet studs and couplings available when required.

© 1" MIN to 1 1/4" MAX regularly furnished. Other dimensions available upon request.

OUTLET TYPE	FIGURE NO.	TYPE OF FITTING	STUD MOUNT	A SIZE	B SIZE	D STUD	E	G	J	K	L	APPROX. WT. LBS.
CAULK	0532	Single–3" Inlet & Outlet with 2" Vent Conn	**1,008.00**	03"	02"	2 x 6"	3 1/2"	1 3/4"	5 1/4"	5 1/4"	8"	25
	0533	Single–3" Inlet & Outlet with 3" Vent Conn	**1,008.00**	03"	03"	2 x 6"	3 1/2"	1 3/4"	6"	5 1/4"	8"	27
	0542	Single–4" Inlet & Outlet with 2" Vent Conn	**1,440.00**	04"	02"	2 x 8"	3 1/2"	3 1/2"	5 1/4"	5"	8"	27
	0544	Single–4" Inlet & Outlet with 4" Vent Conn	**1,440.00**	04"	04"	2 x 8"	3 1/2"	3 1/2"	6"	5"	8"	29
	0544D	Double–4" Inlet & Outlet	**2,387.00**	04"	04"	2 x 8"	-	-	6"	5"	8"	46

NOTE: Always specify fixture manufacturer's model name and number.

†REGULARLY FURNISHED

FIG. 0532Y, 0533Y, 0542Y, 0544Y, RESIDENTIAL FIXTURE SUPPORTS FOR SIPHON JET WATER CLOSETS WITH VERTICAL CENTER LINE FITTINGS

DOUBLE

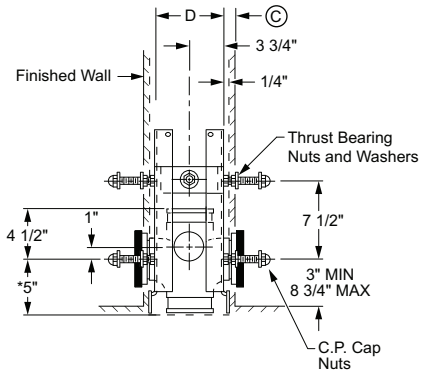

Fig. 0544DY
SIDE VIEW

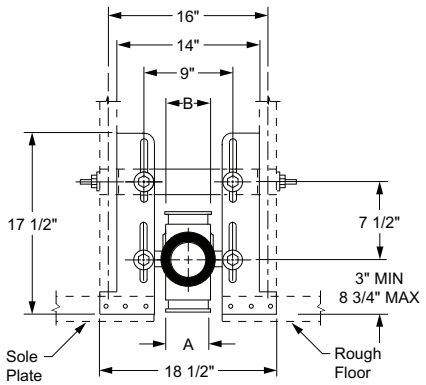

Fig. 0544Y
FRONT VIEW

SINGLE

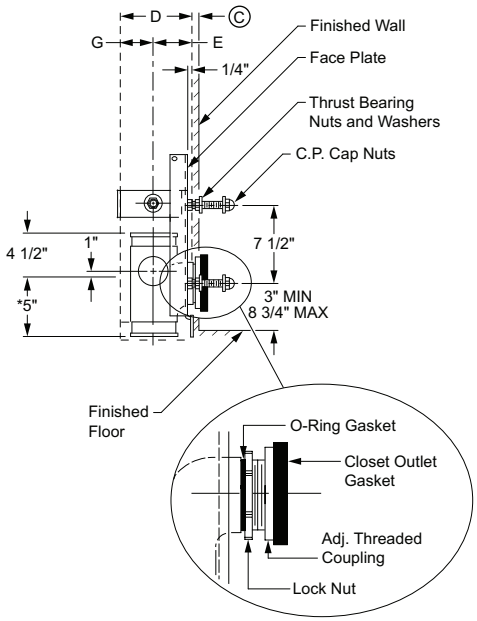

Fig. 0544Y
SIDE VIEW

OPTIONS:		**ADD**
-C06	6 3/4" Coupling (Adjusts from 4" to 6")	**220.00**
-C10	10" Coupling (Adjusts from 7" to 10")	**514.00**
-C14	14" Coupling (Adjusts from 11" to 14")	**808.00**

NOTE: Coupling should extend 5/16" beyond finished wall.

NOTE: Longer closet studs and couplings available when required.

© 1" MIN to 1 1/4" MAX regularly furnished. Other dimensions available upon request.

OUTLET TYPE	FIGURE NO.	TYPE OF FITTING	STUD MOUNT	A SIZE	B SIZE	D STUD	E	G	APPROX. WT. LBS.
NO-HUB	0532Y	Single–3" Inlet & Outlet with 2" Vent Conn	**1,008.00**	03"	02"	2 x 6"	3 1/2"	1 3/4"	25
	0533Y	Single–3" Inlet & Outlet with 3" Vent Conn	**1,008.00**	03"	03"	2 x 6"	3 1/2"	1 3/4"	27
	0542Y	Single–4" Inlet & Outlet with 2" Vent Conn	**1,440.00**	04"	02"	2 x 8"	3 1/2"	3 1/2"	27
	0544Y	Single–4" Inlet & Outlet with 4" Vent Conn	**1,440.00**	04"	04"	2 x 8"	3 1/2"	3 1/2"	29
	0544DY	Double–4" Inlet & Outlet	**2,387.00**	04"	04"	2 X 8"	-	-	46

NOTE: Always specify fixture manufacturer's model name and number.

†REGULARLY FURNISHED

FIXTURE SUPPORTS

FIG. 0532F, 0533F, 0542F, 0544F, RESIDENTIAL FIXTURE SUPPORTS FOR SIPHON JET WATER CLOSETS WITH VERTICAL CENTER LINE FITTINGS

DOUBLE

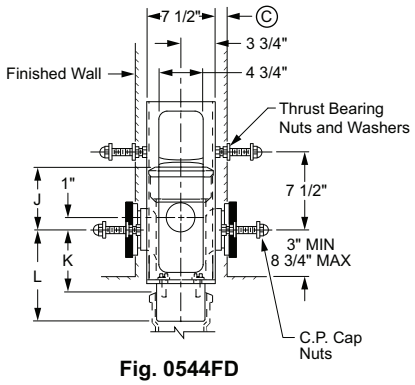

Fig. 0544FD
SIDE VIEW

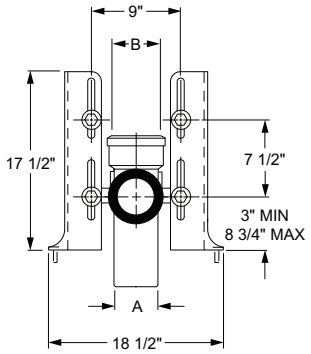

Fig. 0544F
FRONT VIEW

SINGLE

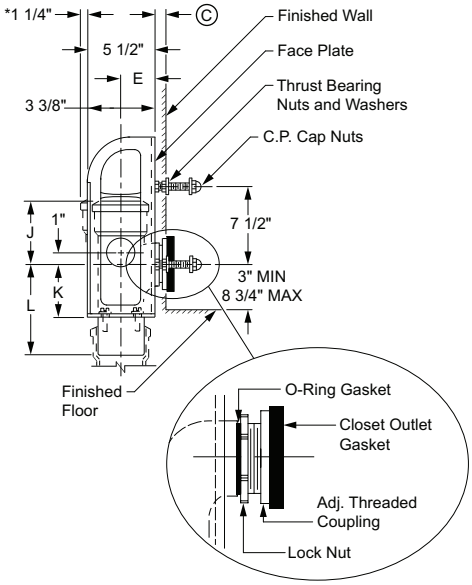

Fig. 0533F
SIDE VIEW

* Hub extends beyond frame 1 1/4" for 4" cast iron hub.

OPTIONS: **ADD**

-C06	6 3/4" Coupling (Adjusts from 4" to 6")	**220.00**
-C10	10" Coupling (Adjusts from 7" to 10")	**514.00**
-C14	14" Coupling (Adjusts from 11" to 14")	**808.00**

NOTE: Coupling should extend 5/16" beyond finished wall.

NOTE: Longer closet studs and couplings available when required.

© 1" MIN to 1 1/4" MAX regularly furnished. Other dimensions available upon request.

OUTLET TYPE	FIGURE NO.	TYPE OF FITTING	FLOOR MOUNT•	A SIZE	B SIZE	E	J	K	L	APPROX. WT. LBS.
CAULK	0532F	Single–3" Inlet & Outlet with 2" Vent Conn	**1,469.00**	03"	02"	3"	5 1/4"	5 1/4"	8"	50
	0533F	Single–3" Inlet & Outlet with 3" Vent Conn	**1,469.00**	03"	03"	3"	6"	5 1/4"	8"	52
	0542F	Single–4" Inlet & Outlet with 2" Vent Conn	**1,892.00**	04"	02"	3 1/2"	5 1/4"	5"	8"	51
	0544F	Single–4" Inlet & Outlet with 4" Vent Conn	**1,892.00**	04"	04"	3 1/2"	6"	5"	8"	54
	0544FD	Double–4" Inlet & Outlet	**2,834.00**	04"	04"	-	6"	5"	8"	73

• Floor mount series may also be used in commercial applications where applicable.

NOTE: Always specify fixture manufacturer's model name and number.

†REGULARLY FURNISHED

FIG. 0532FY, 0533FY, 0542FY, 0544FY, RESIDENTIAL FIXTURE SUPPORTS FOR SIPHON JET WATER CLOSETS WITH VERTICAL CENTER LINE FITTINGS

DOUBLE

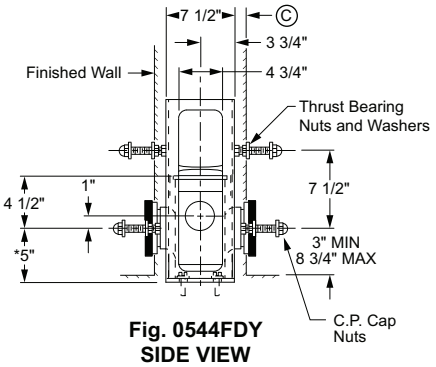

Fig. 0544FDY
SIDE VIEW

SINGLE

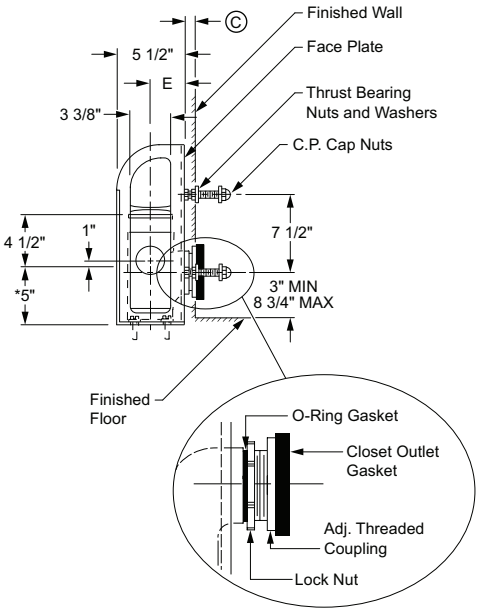

Fig. 0544FY
SIDE VIEW

* Hub extends beyond frame 1 1/4" for 4" cast iron hub.

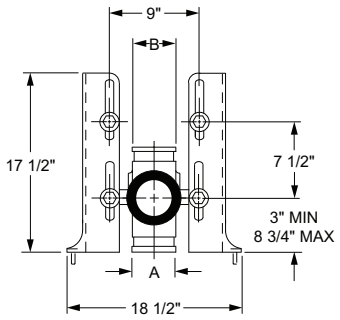

Fig. 0544FY
FRONT VIEW

OPTIONS:		ADD
-C06	6 3/4" Coupling (Adjusts from 4" to 6")	**220.00**
-C10	10" Coupling (Adjusts from 7" to 10")	**514.00**
-C14	14" Coupling (Adjusts from 11" to 14")	**808.00**

OUTLET TYPE	FIGURE NO.	TYPE OF FITTING	FLOOR MOUNT•	A SIZE	B SIZE	E	APPROX. WT. LBS.
NO-HUB	0532FY	Single–3" Inlet & Outlet with 2" Vent Conn	**1,469.00**	03"	02"	3"	50
	0533FY	Single–3" Inlet & Outlet with 3" Vent Conn	**1,469.00**	03"	03"	3"	52
	▲ 0542FY	Single–4" Inlet & Outlet with 2" Vent Conn	**1,892.00**	04"	02"	3 1/2"	51
	▲ 0544FY	Single–4" Inlet & Outlet with 4" Vent Conn	**1,892.00**	04"	04"	3 1/2"	54
	▲ 0544FDY	Double–4" Inlet & Outlet	**2,834.00**	04"	04"	-	73

• Floor mount series may also be used in commercial applications where applicable.

***NOTE:** 5" dimension is to bottom of fitting.

NOTE: Coupling should extend 5/16" beyond finished wall.

NOTE: Longer closet studs and couplings available when required.
© 1" MIN to 1 1/4" MAX regularly furnished. Other dimensions available upon request.

▲**NOTE:** Back of fitting extends beyond frame 1/4" for 4" sizes.
Recommend use with 2 x 8 studs only.

NOTE: Always specify fixture manufacturer's model name and number.

†REGULARLY FURNISHED

FIG. 0548 RESIDENTIAL FIXTURE SUPPORTS FOR SIPHON JET WATER CLOSETS ADAPTER TYPE WITHOUT FITTINGS

SINGLE

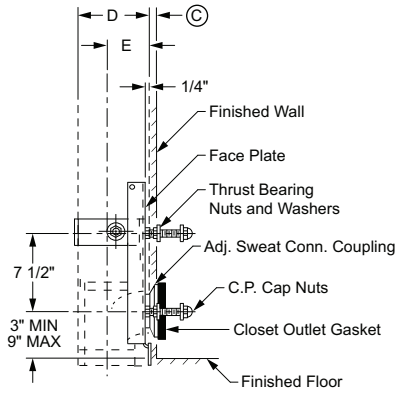

Fig. 0548
SIDE VIEW

DOUBLE

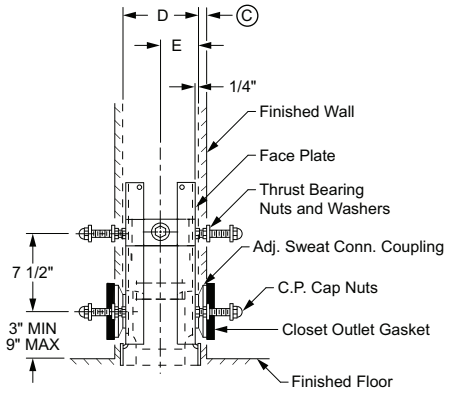

Fig. 0548D
SIDE VIEW

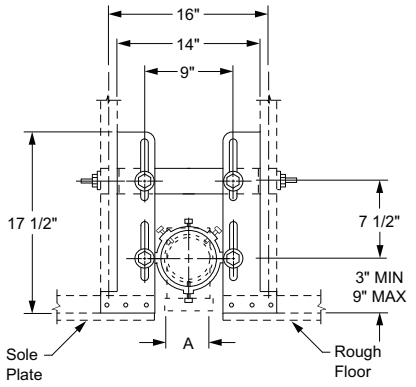

Fig. 0548
FRONT VIEW

NOTE: Coupling should extend 5/16" beyond finished wall.

NOTE: Longer closet studs and couplings available when required.

© 1/2" MIN to 1 1/4" MAX regularly furnished.

OUTLET TYPE	FIGURE NO.	TYPE OF FITTING	STUD MOUNT	A SIZE	D STUD	E	APPROX. WT. LBS.
CAULK	0548-3	Single–3" Copper Sweat Connection	**860.00**	03"	2 x 6"	4"	17
	0548-4	Single–4" Copper Sweat Connection	**1,147.00**	04"	2 x 8"	5"	19
	0548D3	Double–3" Copper Sweat Connection	**1,683.00**	03"	2 x 8"	-	34
	0548P	Single–3" Plastic Connection	**860.00**	03"	2 x 8"	4 1/2"	18
	0548DP	Double–3" Plastic Connection	**1,683.00**	03"	2 x 10"	-	34

NOTE: Always specify fixture manufacturer's model name and number.

†REGULARLY FURNISHED

FIG. 0548F RESIDENTIAL SUPPORTS FOR SIPHON JET WATER CLOSETS ADAPTER TYPE WITHOUT FITTINGS

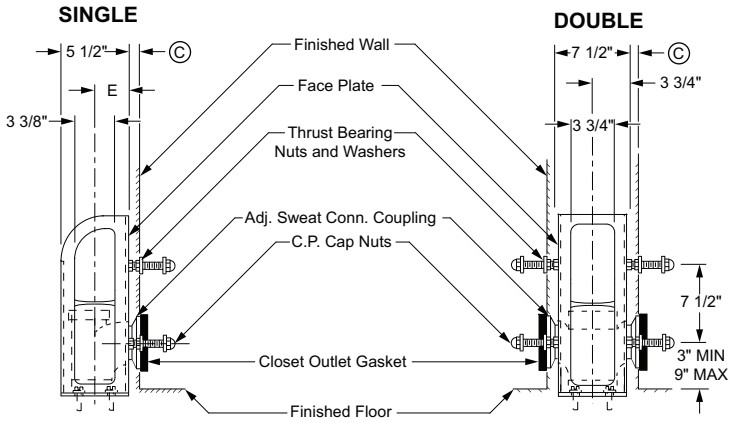

Fig. 0548F
SIDE VIEW

Fig. 0548FD
SIDE VIEW

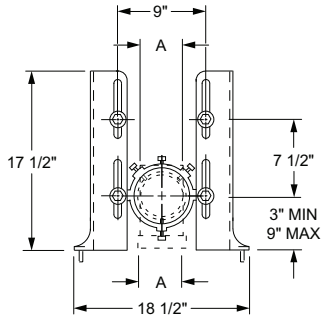

Fig. 0548F
FRONT VIEW

NOTE: Coupling should extend 5/16" beyond finished wall.

NOTE: Longer closet studs and couplings available when required.

© 1/2" MIN to 1 1/4" MAX regularly furnished.

▲**NOTE:** Back of fitting extends beyond frame 1/2" for 4" sizes. Recommend use with 2 x 8 studs only.

OUTLET TYPE	FIGURE NO.	TYPE OF FITTING	FLOOR MOUNT•	A SIZE	E	APPROX. WT. LBS.
CAULK	0548F-3	Single–3” Copper Sweat Connection	**1,319.00**	03"	4"	38
	▲ 0548F-4	Single–4” Copper Sweat Connection	**1,595.00**	04"	5"	38
	0548FD3	Double–3” Copper Sweat Connection	**2,137.00**	03"	-	52
	0548FP	Single–3” Plastic Connection	**1,319.00**	03"	4 1/2”	37
	0548FDP	Double–3” Plastic Connection	**2,137.00**	03"	-	51

• Floor mount series may also be used in commercial applications where applicable.

NOTE: Always specify fixture manufacturer's model name and number.

†REGULARLY FURNISHED

FIG. 0550 RESIDENTIAL SUPPORTS FOR SIPHON JET WATER CLOSETS VERTICAL OFFSET FITTINGS

SINGLE

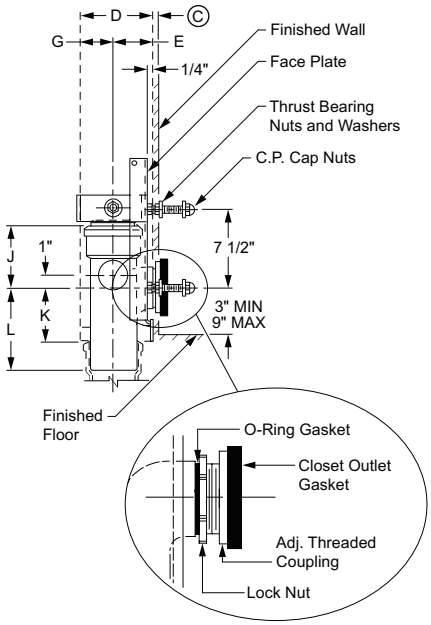

Fig. 0550
SIDE VIEW

DOUBLE

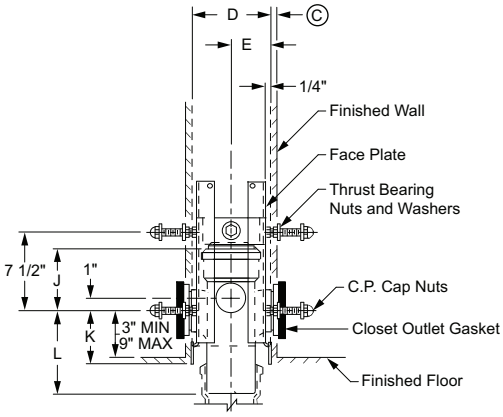

Fig. 0550D
SIDE VIEW

NOTE: Coupling should extend 5/16" beyond finished wall.

NOTE: Longer closet studs and couplings available when required.

© 1" MIN to 1 1/4" MAX regularly furnished. Other dimensions available upon request. Service weight regularly furnished.

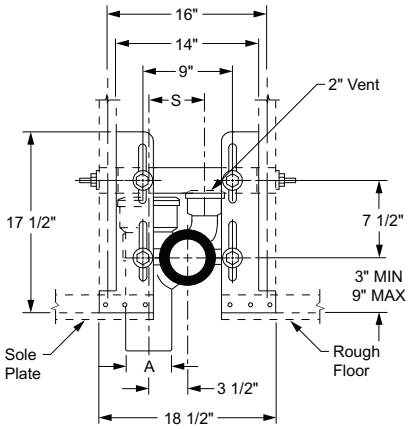

Fig. 0550
FRONT VIEW

OUTLET TYPE	FIGURE NO.	TYPE OF FITTING	STUD MOUNT	A SIZE	D STUD	E	G	J	K	L	S	APPROX. WT. LBS.
CAULK	0550L3	Single–Left Hand, 3" Caulk Connection	**1,835.00**	03"	2 x 6"	3 3/4"	1 3/4"	6"	5 1/4"	8"	5 1/4"	30
	0550L4	Single–Left Hand, 4" Caulk Connection	**1,835.00**	04"	2 x 8"	3 3/4"	3 3/4"	6"	5"	8"	5 1/4"	32
	0550R3	Single–Right Hand, 3" Caulk Connection	**1,835.00**	03"	2 x 6"	3 3/4"	1 3/4"	6"	5 1/4"	8"	5 1/4"	30
	0550R4	Single–Right Hand, 4" Caulk Connection	**1,835.00**	04"	2 x 8"	3 3/4"	3 3/4"	6"	5"	8"	5 1/4"	32
	0550D3	Double–3" Caulk Connection	**3,143.00**	03"	2 x 6"	3 3/4"	1 3/4"	6"	5 1/4"	8"	5 1/4"	50
	0550D4	Double–4" Caulk Connection	**3,143.00**	04"	2 x 8"	3 3/4"	3 3/4"	6"	5"	8"	5 1/4"	55

NOTE: Always specify fixture manufacturer's model name and number.

†REGULARLY FURNISHED

FIG. 0550F RESIDENTIAL SUPPORTS FOR SIPHON JET WATER CLOSETS VERTICAL OFFSET FITTINGS

SINGLE

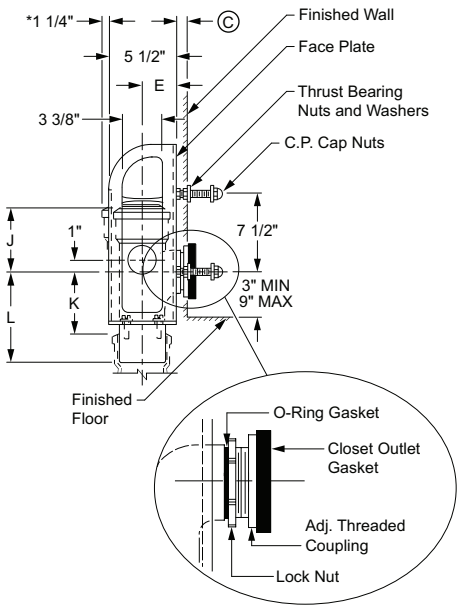

Fig. 0550F
SIDE VIEW

DOUBLE

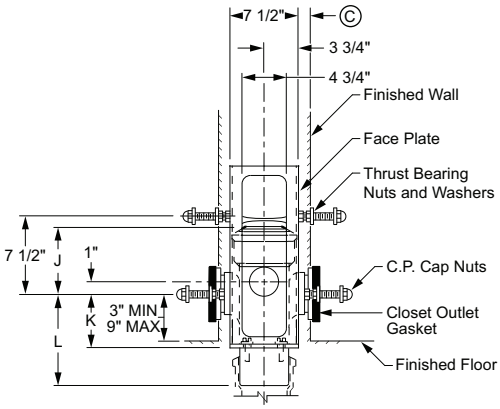

Fig. 0550FD
SIDE VIEW

NOTE: Coupling should extend 5/16" beyond finished wall.

NOTE: Longer closet studs and couplings available when required.

© 1" MIN to 1 1/4" MAX regularly furnished. Other dimensions available upon request. Service weight regularly furnished.

*Hub extends beyond frame 1 1/4" for 4" cast iron hub.

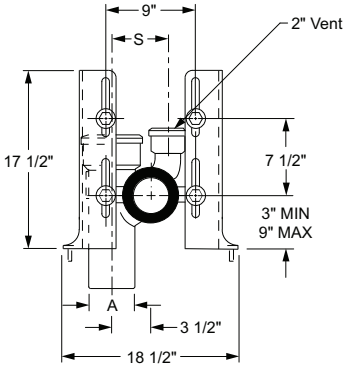

Fig. 0550F
FRONT VIEW

OUTLET TYPE	FIGURE NO.	TYPE OF FITTING	FLOOR MOUNT•	A SIZE	E	J	K	L	S	APPROX. WT. LBS.
CAULK	0550FL3	Single–Left Hand, 3" Caulk Connection	**1,835.00**	03"	3"	6"	5 1/4"	8"	5 1/4"	62
	0550FL4	Single–Left Hand, 4" Caulk Connection	**1,835.00**	04"	3 3/4"	6"	5"	8"	5 1/4"	55
	0550FR3	Single–Right Hand, 3" Caulk Connection	**1,835.00**	03"	3"	6"	5 1/4"	8"	5 1/4"	62
	0550FR4	Single–Right Hand, 4" Caulk Connection	**1,835.00**	04"	3 3/4"	6"	5"	8"	5 1/4"	55
	0550FD3	Double–3" Caulk Connection	**3,143.00**	03"	3"	6"	5 1/4"	8"	5 1/4"	76
	0550FD4	Double–4" Caulk Connection	**3,143.00**	04"	3 3/4"	6"	5"	8"	5 1/4"	82

• Floor mount series may also be used in commercial applications where applicable.

NOTE: Always specify fixture manufacturer's model name and number.

†REGULARLY FURNISHED

FIXTURE SUPPORTS

FIG. 0600 FACE PLATE FIXTURE SUPPORTS WITHOUT FITTINGS FOR SIPHON JET WATER CLOSETS

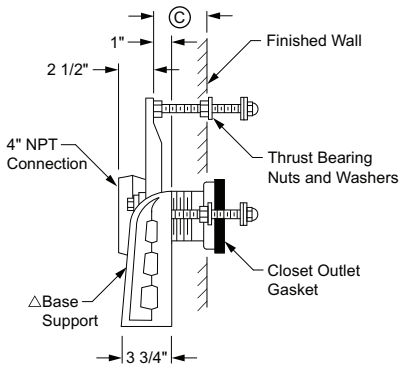

Fig. 0600
SIDE VIEW

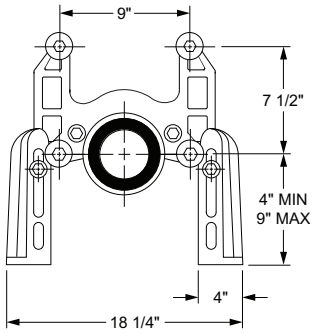

Fig. 0600
FRONT VIEW

NOTE: △Base support must be securely anchored to floor (with four 1/2" Bolts furnished by others).

NOTE: Longer couplings available when required, up to 14" long. (Pricing will vary)

NOTE: © 1" MIN to 3" MAX as regularly furnished.

OPTIONS: **ADD**

-C06	6 3/4" Coupling (Adjusts from 4" to 6")	**220.00**
-C10	10" Coupling (Adjusts from 7" to 10")	**514.00**
-C14	14" Coupling (Adjusts from 11" to 14")	**808.00**

The water closet gasket regularly furnished is made of molded neoprene and designed to fit water closet outlet dimensions and configurations shown in ANSI Standard A112.19.2M, Figure 13B. If gasket is not found to be compatible to fixture due to nonconformance of said fixture to ANSI A112.19.2M, then fixture manufacturer shall be consulted for a suitable gasket recommendation. Jay R. Smith assumes no liability for connections to fixtures which do not conform to these standards.

FIGURE NO.	DESCRIPTION	PRICE	APPROX. WT. LBS.
0600	Siphon Jet Type, 4" Connection	**1,105.00**	27

FIG. 0620 FACE PLATE FIXTURE SUPPORTS WITHOUT FITTINGS FOR BLOWOUT WATER CLOSETS

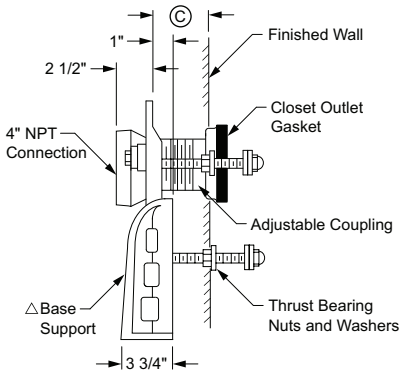

Fig. 0620
SIDE VIEW

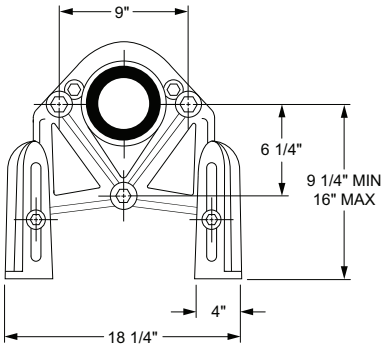

Fig. 0620
FRONT VIEW

NOTE: △Base support must be securely anchored to floor (with four 1/2" Bolts furnished by others).

NOTE: Longer couplings available when required, up to 14" long. (Pricing will vary)

NOTE: © 1" MIN to 3" MAX as regularly furnished.

The water closet gasket regularly furnished is made of molded neoprene and designed to fit water closet outlet dimensions and configurations shown in ANSI Standard A112.19.2M, Figure 13B. If gasket is not found to be compatible to fixture due to nonconformance of said fixture to ANSI A112.19.2M, then fixture manufacturer shall be consulted for a suitable gasket recommendation. Jay R. Smith assumes no liability for connections to fixtures which do not conform to these standards.

FIGURE NO.	DESCRIPTION	PRICE	APPROX. WT. LBS.
0620	Blowout Type, 4" Connection	**1,026.00**	31

NOTE: Service weight regularly furnished on fittings above.
NOTE: Always specify fixture manufacturer's model name and number.

†REGULARLY FURNISHED

FIG. 0609, 0610 LABOR SAVER® OFF-THE-FLOOR URINAL SUPPORTS WITH SUPPORTING STUDS AND ADJUSTABLE COUPLING FOR BLOWOUT URINALS

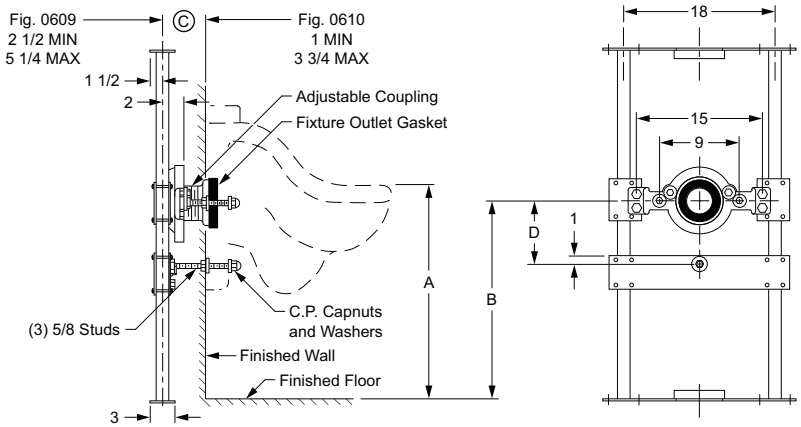

SIDE VIEW **Fig. 0609** **FRONT VIEW**

NOTE: © This dimension can be increased when fixture support is to be installed behind the wall (specify when required and wall thickness).

NOTE: The rough-in dimensions listed on this drawing are based on current information available to Jay R. Smith by the fixture manufacturers. We recommend that you verify these dimensions with the fixture manufacturer. We will not accept responsibility for rough-in dimension changes by the fixture manufacturer.

For lettered dimensions, contact factory.

The water closet gasket regularly furnished is made of molded neoprene and designed to fit water closet outlet dimensions and configurations shown in ANSI Standard A112.19.2M, Figure 13B. If gasket is not found to be compatible to fixture due to nonconformance of said fixture to ANSI A112.19.2M, then fixture manufacturer shall be consulted for a suitable gasket recommendation. Jay R. Smith assumes no liability for connections to fixtures which do not conform to these standards.

FIGURE NO.	DESCRIPTION	PRICE	APPROX. WT. LBS.
0609	3" Outlet Conn & Bottom Bearing Plate	**2,003.00**	42
0610	4" Outlet Conn & Bottom Bearing Plate	**2,003.00**	43

FIG. 0611 LABOR SAVER® OFF-THE-FLOOR URINAL SUPPORTS WITH SUPPORTING STUDS, WASTE FITTING AND ADJUSTABLE COUPLING FOR BLOWOUT URINALS

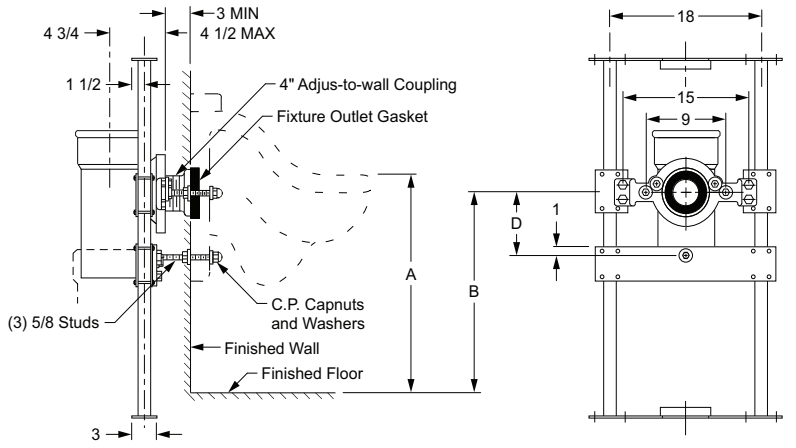

SIDE VIEW **Fig. 0611** **FRONT VIEW**

NOTE: The rough-in dimensions listed on this drawing are based on current information available to Jay R. Smith by the fixture manufacturers. We recommend that you verify these dimensions with the fixture manufacturer. We will not accept responsibility for rough-in dimension changes by the fixture manufacturer.

For lettered dimensions, contact factory.

The water closet gasket regularly furnished is made of molded neoprene and designed to fit water closet outlet dimensions and configurations shown in ANSI Standard A112.19.2M, Figure 13B. If gasket is not found to be compatible to fixture due to nonconformance of said fixture to ANSI A112.19.2M, then fixture manufacturer shall be consulted for a suitable gasket recommendation. Jay R. Smith assumes no liability for connections to fixtures which do not conform to these standards.

FIGURE NO.	DESCRIPTION	PRICE	APPROX. WT. LBS.
0611	4" Outlet Connection	**3,315.00**	42

NOTE: Service weight regularly furnished on fittings above.
NOTE: Always specify fixture manufacturer's model name and number.

†REGULARLY FURNISHED

FIXTURE SUPPORTS

FIG. 0614, 0615 LABOR SAVER® URINAL SUPPORTS WITH HANGER PLATES FOR BLOWOUT AND WASHOUT URINALS

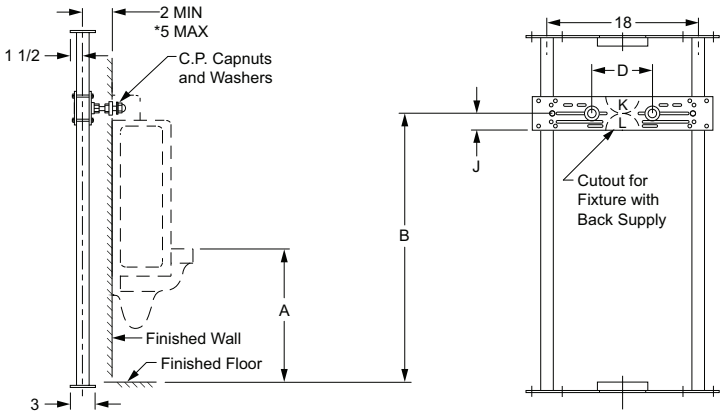

SIDE VIEW — Fig. 0614 — FRONT VIEW

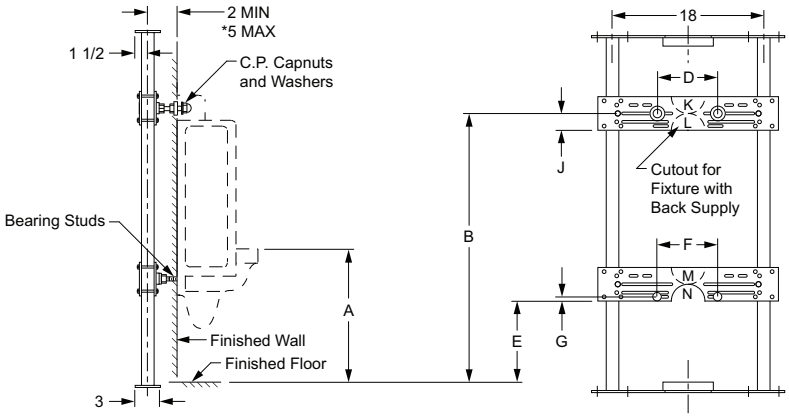

SIDE VIEW — Fig. 0615 — FRONT VIEW

NOTE: *This dimension can be increased when fixture support is to be installed behind the wall (specify when required and wall thickness).

NOTE: The rough-in dimensions listed on this drawing are based on current information available to Jay R. Smith by the fixture manufacturers. We recommend that you verify these dimensions with the fixture manufacturer. We will not accept responsibility for rough-in dimension changes by the fixture manufacturer.

For lettered dimensions, contact factory.

FIGURE NO.	DESCRIPTION	PRICE	APPROX. WT. LBS.
0614	Less Bottom Bearing Plate	**1,255.00**	26
0615	With Bottom Bearing Plate	**1,399.00**	32

NOTE: Service weight regularly furnished on fittings above.
NOTE: Always specify fixture manufacturer's model name and number.

†REGULARLY FURNISHED

FIG. 0616, 0617 LABOR SAVER® OFF-THE-FLOOR URINAL SUPPORTS WITH HANGER PLATES FOR BLOWOUT AND WASHOUT URINALS WITH WALL HANGERS

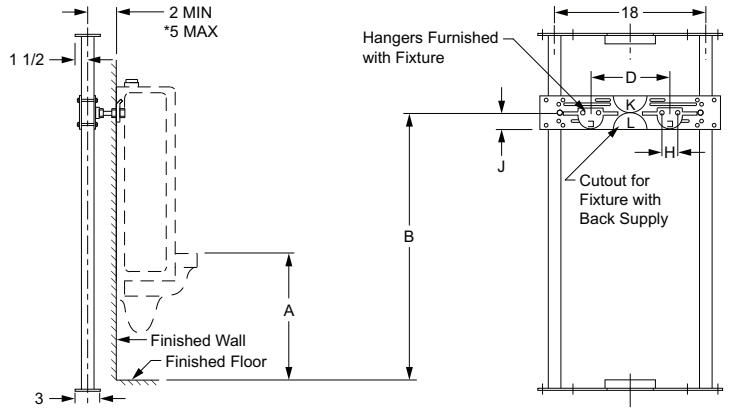

SIDE VIEW — Fig. 0616 — FRONT VIEW

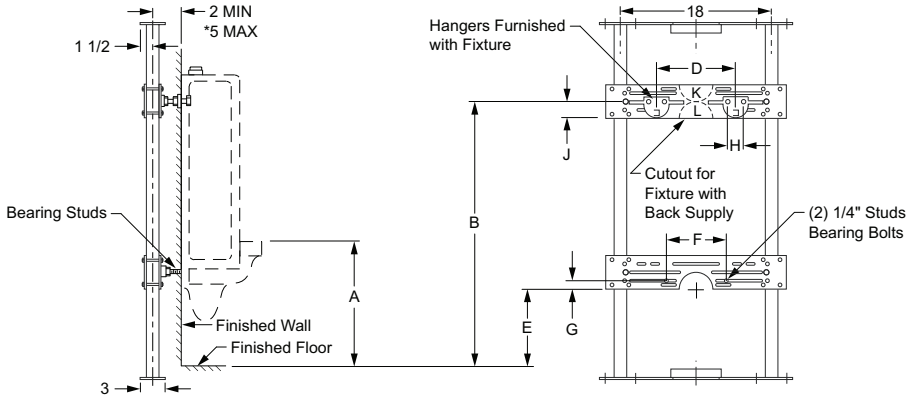

SIDE VIEW — Fig. 0617 — FRONT VIEW

NOTE: *This dimension can be increased when fixture support is to be installed behind the wall (specify when required and wall thickness).

FIGURE NO.	DESCRIPTION	PRICE	APPROX. WT. LBS.
0616	Less Bottom Bearing Plate	**1,255.00**	26
0617	With Bottom Bearing Plate	**1,399.00**	32

NOTE: The rough-in dimensions listed on this drawing are based on current information available to Jay R. Smith by the fixture manufacturers. We recommend that you verify these dimensions with the fixture manufacturer. We will not accept responsibility for rough-in dimension changes by the fixture manufacturer.

For lettered dimensions, contact factory.

FIG. 0622 LABOR SAVER® URINAL SUPPORT FLOOR MOUNTED TYPE WITH TOP AND BOTTOM SUPPORTING PLATES AND STUDS FOR WASHOUT URINALS

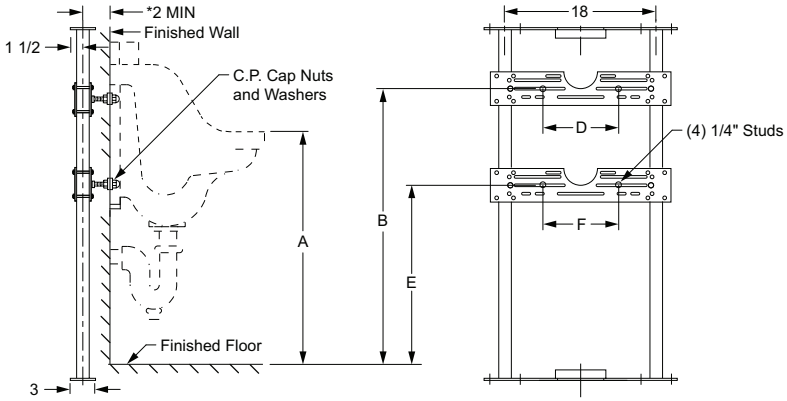

SIDE VIEW — Fig. 0622 — FRONT VIEW

NOTE: *This dimension includes a wall thickness of 1/2". For greater wall thickness, specify centerline of upright to finished wall dimension.

NOTE: The rough-in dimensions listed on this drawing are based on current information available to Jay R. Smith by the fixture manufacturers. We recommend that you verify these dimensions with the fixture manufacturer. We will not accept responsibility for rough-in dimension changes by the fixture manufacturer.

For lettered dimensions, contact factory.

FIGURE NO.	DESCRIPTION	PRICE	APPROX. WT. LBS.
0622	With Bottom Bearing Plate	**1,399.00**	32

NOTE: Service weight regularly furnished on fittings above.
NOTE: Always specify fixture manufacturer's model name and number.

†REGULARLY FURNISHED

FIG. 0623, 0624 LABOR SAVER® URINAL SUPPORTS WITH HANGER PLATES FOR BLOWOUT AND WASHOUT URINALS WITH CONCEALED WALL HANGERS

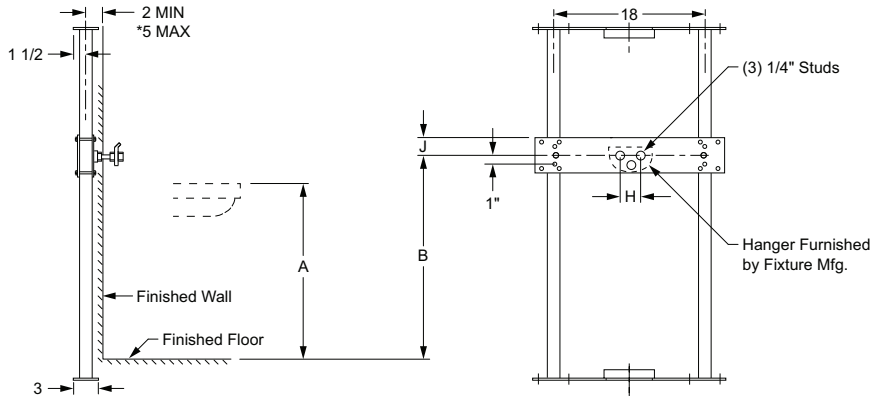

SIDE VIEW — Fig. 0623 — FRONT VIEW

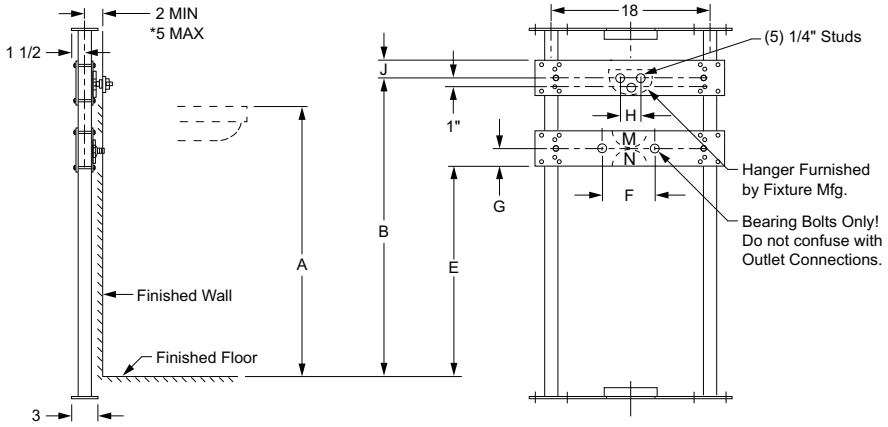

SIDE VIEW — Fig. 0624 — FRONT VIEW

NOTE: *This dimension can be increased when fixture support is to be installed behind the wall (specify when required and wall thickness).

FIGURE NO.	DESCRIPTION	PRICE	APPROX. WT. LBS.
0623	Less Bottom Bearing Plate	**1,255.00**	26
0624	With Bottom Bearing Plate	**1,399.00**	32

NOTE: The rough-in dimensions listed on this drawing are based on current information available to Jay R. Smith by the fixture manufacturers. We recommend that you verify these dimensions with the fixture manufacturer. We will not accept responsibility for rough-in dimension changes by the fixture manufacturer.

For lettered dimensions, contact factory.

FIG. 0628 LABOR SAVER® URINAL SUPPORT FLOOR MOUNTED TYPE W/TOP AND BOTTOM SUPPORTING PLATES AND STUDS FOR WASHOUT URINALS W/TOP STUD AND BOTTOM OUTLET

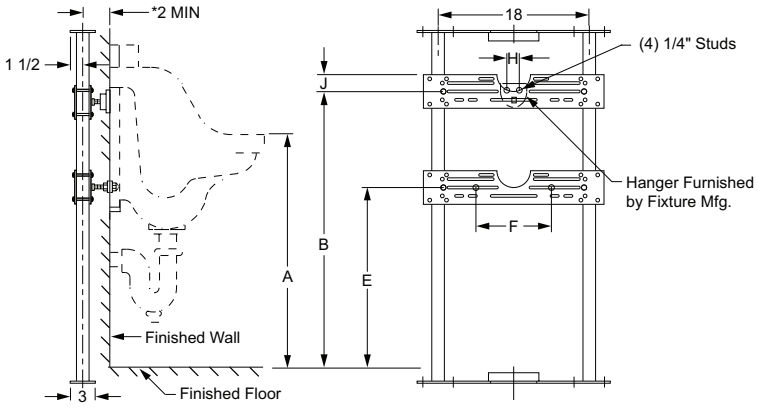

SIDE VIEW — Fig. 0628 — FRONT VIEW

FIGURE NO.	DESCRIPTION	PRICE	APPROX. WT. LBS.
0628	With Bottom Bearing Plate	**1,399.00**	32

NOTE: *This dimension includes a wall thickness of 1/2". For greater wall thickness, specify centerline of upright to finished wall dimension.

NOTE: The rough-in dimensions listed on this drawing are based on current information available to Jay R. Smith by the fixture manufacturers. We recommend that you verify these dimensions with the fixture manufacturer. We will not accept responsibility for rough-in dimension changes by the fixture manufacturer.

For lettered dimensions, contact factory.

The water closet gasket regularly furnished is made of molded neoprene and designed to fit water closet outlet dimensions and configurations shown in ANSI Standard A112.19.2M, Figure 13B. If gasket is not found to be compatible to fixture due to nonconformance of said fixture to ANSI A112.19.2M, then fixture manufacturer shall be consulted for a suitable gasket recommendation. Jay R. Smith assumes no liability for connections to fixtures which do not conform to these standards.

NOTE: Service weight regularly furnished on fittings above.
NOTE: Always specify fixture manufacturer's model name and number.

†REGULARLY FURNISHED

FIG. 0629, 0630, 0632, 0633 URINAL SUPPORTS FOR OFF-THE-FLOOR URINALS WITH SUPPORTING STUDS AND ADJUSTABLE COUPLING FOR BLOWOUT URINALS/SINKS

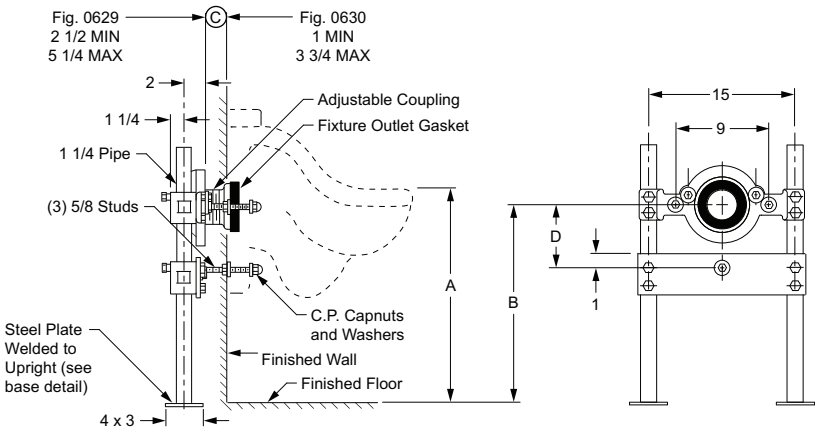

SIDE VIEW

Fig. 0629

FRONT VIEW

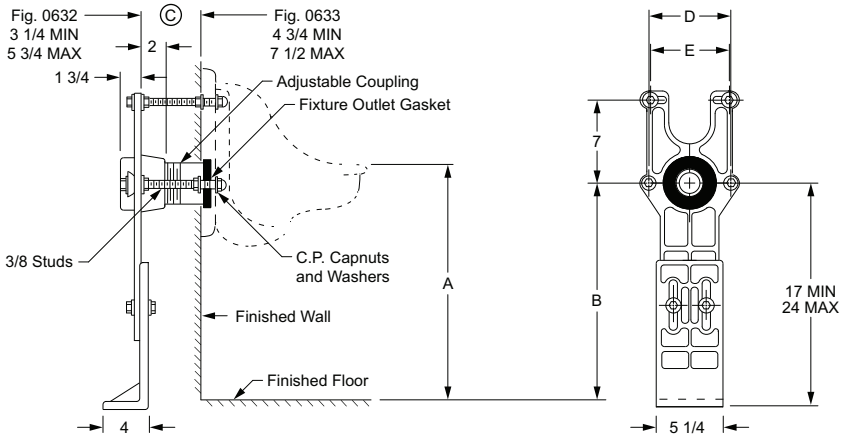

SIDE VIEW

Fig. 0632

FRONT VIEW

FIGURE NO.	DESCRIPTION	PRICE	APPROX. WT. LBS.
0629	3" Outlet Conn & Bottom Bearing Plate	**1,537.00**	42
0630	4" Outlet Conn & Bottom Bearing Plate	**1,537.00**	43
0631	4" Outlet Connection	**2,548.00**	42
0632	2" Outlet Connection	**1,353.00**	33
0633	3" Outlet Connection	**1,353.00**	37

NOTE: Coupling should extend 5/8" beyond finished wall.

NOTE: All support bases must be securely anchored to a rigid floor and/or other rigid substructure with (4) 1/2" bolts furnished by others.

For lettered dimensions, contact factory.

The water closet gasket regularly furnished is made of molded neoprene and designed to fit water closet outlet dimensions and configurations shown in ANSI Standard A112.19.2M, Figure 13B. If gasket is not found to be compatible to fixture due to nonconformance of said fixture to ANSI A112.19.2M, then fixture manufacturer shall be consulted for a suitable gasket recommendation. Jay R. Smith assumes no liability for connections to fixtures which do not conform to these standards.

NOTE: Service weight regularly furnished on fittings above.
NOTE: Always specify fixture manufacturer's model name and number.

†REGULARLY FURNISHED

FIG. 0634, 0635, 0636, 0637 URINAL SUPPORTS FOR OFF-THE-FLOOR URINALS WITH HANGER PLATES FOR BLOWOUT AND WASHOUT URINALS

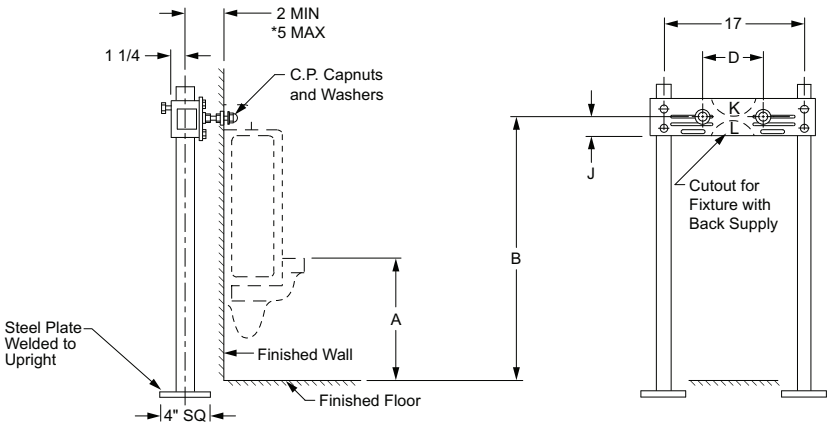

SIDE VIEW — Fig. 0634 — FRONT VIEW

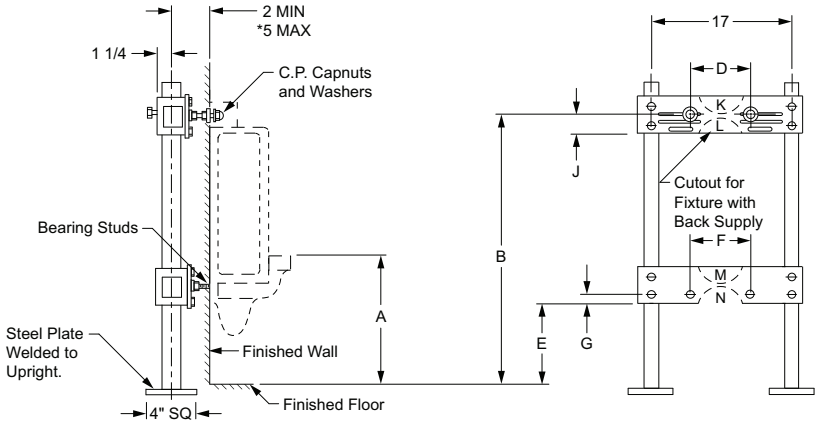

SIDE VIEW — Fig. 0635 — FRONT VIEW

FIGURE NO.	DESCRIPTION	PRICE	APPROX. WT. LBS.
0634	Less Bottom Bearing Plate	**966.00**	26
0635	With Bottom Bearing Plate	**1,078.00**	32
0636	Less Bottom Bearing Plate	**966.00**	26
0637	With Bottom Bearing Plate	**1,078.00**	32

NOTE: *This dimension can be increased when fixture support is to be installed behind the wall (specify when required and wall thickness).

NOTE: All support bases must be securely anchored to a rigid floor and/or other rigid substructure with (4) 1/2" bolts furnished by others.

For lettered dimensions, contact factory.

NOTE: Service weight regularly furnished on fittings above.
NOTE: Always specify fixture manufacturer's model name and number.

†REGULARLY FURNISHED

FIG. 0642, 0643, 0644, 0648 URINAL SUPPORTS FOR OFF-THE-FLOOR URINALS WITH HANGER PLATES FOR BLOWOUT AND WASHOUT URINALS

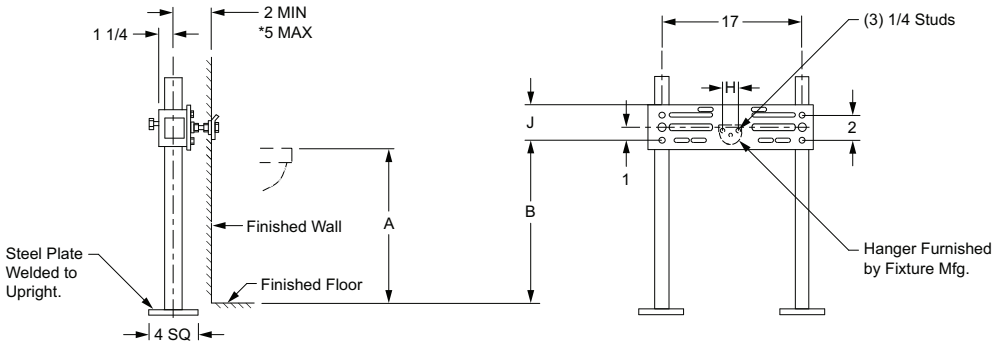

SIDE VIEW — Fig. 0643 — FRONT VIEW

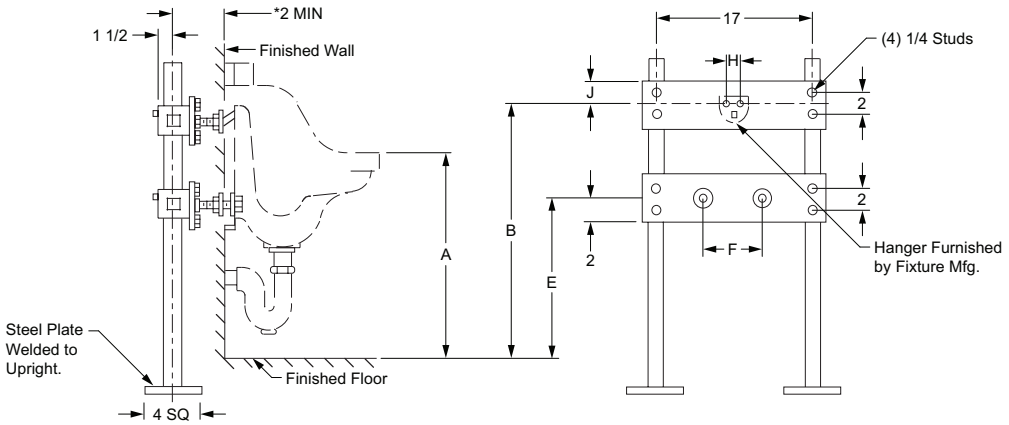

SIDE VIEW — Fig. 0648 — FRONT VIEW

FIGURE NO.	DESCRIPTION	PRICE	APPROX. WT. LBS.
0642	With Bottom Bearing Plate	**1,078.00**	32
0643	Less Bottom Bearing Plate	**966.00**	26
0644	With Bottom Bearing Plate	**1,078.00**	32
0648	With Bottom Bearing Plate	**1,078.00**	32

NOTE: *This dimension can be increased when fixture support is to be installed behind the wall (specify when required and wall thickness).

For lettered dimensions, contact factory.

NOTE: Service weight regularly furnished on fittings above.
NOTE: Always specify fixture manufacturer's model name and number.

†REGULARLY FURNISHED

FIXTURE SUPPORTS

FIG. 0650 SERIES 90° DOUBLE VERTICAL INLET STACK FITTINGS

FUNCTION: Recommended for use in institutions where one stack fitting serves two rooms while providing separate vent hubs. The 1 1/2" or 2" connection is provided for a lavatory waste when required.

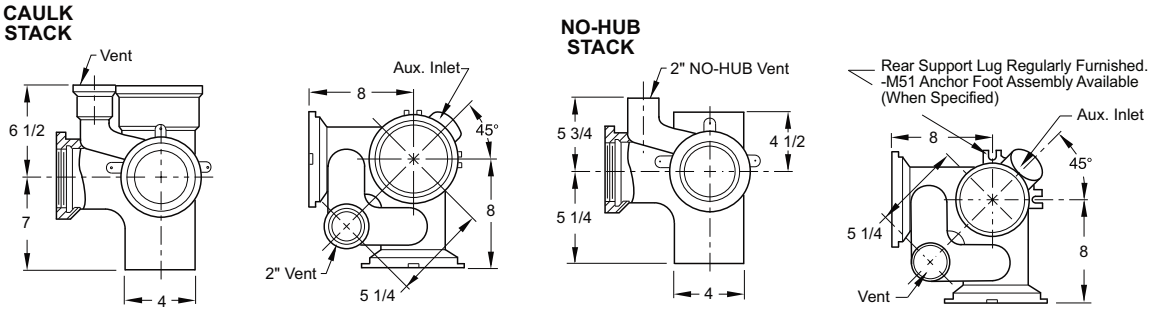

Fig. 0650 | Fig. 0650 TOP VIEW | Fig. 0650Y | Fig. 0650Y TOP VIEW

FIGURE NO.	DESCRIPTION	PRICE	APPROX. WT. LBS.
0650	Caulk Conn, Less 2" Auxiliary Tap	**3,352.00**	47
0650Y	No-Hub Conn, Less 2" Auxiliary Tap	**3,352.00**	42
0651	Caulk Conn, With 2" Auxiliary Tap	**3,820.00**	47
0651Y	No-Hub Conn, With 2" Auxiliary Tap	**3,820.00**	42

FIG. 0660 VERTICAL INLET STACK FITTINGS

FUNCTION: Recommended for use in institutions where one stack fitting serves two rooms while providing separate vent hubs. The 1 1/2" or 2" connection is provided for a lavatory waste when required.

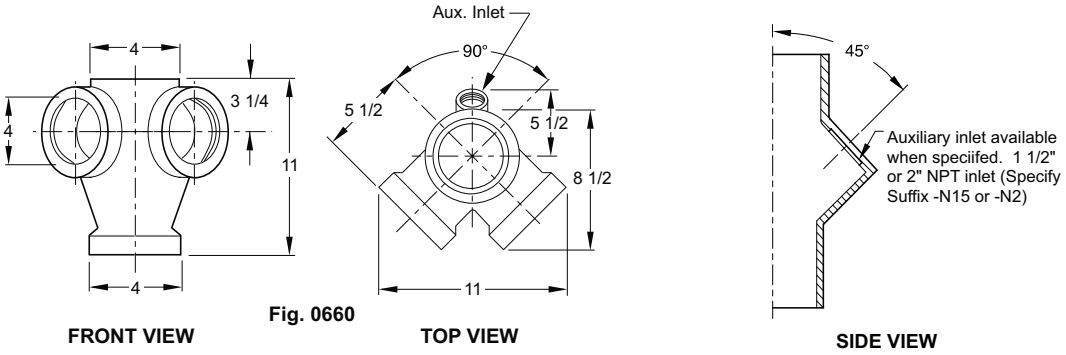

FRONT VIEW | Fig. 0660 | TOP VIEW | SIDE VIEW

FIGURE NO.	DESCRIPTION	PRICE	APPROX. WT. LBS.
0660F	Thread Conn, Less 2" Auxiliary Tap	**3,558.00**	23
0661F	Thread Conn, With 2" Auxiliary Tap	**4,034.00**	30

NOTE: Service weight regularly furnished on fittings above.
NOTE: Always specify fixture manufacturer's model name and number.

†REGULARLY FURNISHED

FIG 0672, 0674 SERIES INLET STACK FITTINGS FOR HUB AND SPIGOT SYSTEMS

FUNCTION: Recommended for use with a floor mounted back outlet water closet.

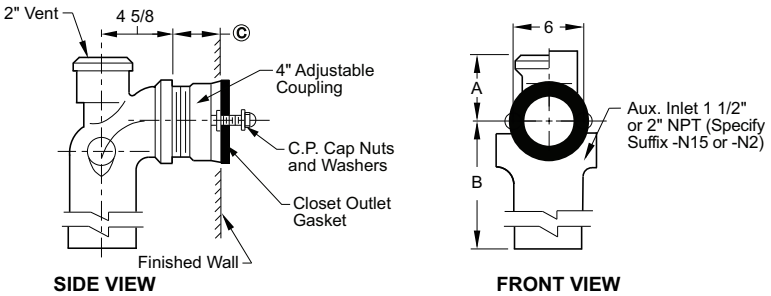

Fig. 0672

© Dimension is regularly furnished 4" long. Coupling provides 3/4" adjustment in either direction.

FIGURE NO.	DESCRIPTION	PRICE	SERVICE WEIGHT A	SERVICE WEIGHT B	NO-HUB A	NO-HUB B	APPROX. WT. LBS.
0672	4" Spigot Conn, With 2" Vent Hub	**1,877.00**	5"	8"	-	-	19
0674F	4" Spigot Conn, With 4" Vent Hub	**1,877.00**	5 1/2"	8"	-	-	19

The water closet gasket regularly furnished is designed to fit water closet outlet dimensions and configurations shown in ANSI Standard A112.19.2. If gasket is not found to be compatible to fixture due to nonconformance of said fixture to ANSI A112.19.2, then fixture manufacturer shall be consulted for a suitable gasket recommendation. Jay R. Smith assumes no liability for connections to fixtures which do not conform to these standards.

MULTIPLE INLET STACK FITTING CONNECTION ASSEMBLIES

ASSEMBLY NO.	DESCRIPTION	PRICE
M73 OR M74	Outlet Conn (to 12"), for Stainless Steel	**983.00**
M-80-NH	4" No-Hub Connection, 6" long*	**983.00**
M-80-T	4" Thread Connection, 6" long*	**983.00**
M-81-NH	4" No-Hub Connection, 12" long*	**858.00**
M-81-T	4" Thread Connection, 12" long*	**858.00**
M-84-4-NH	4" Male No-Hub Connection	**491.00**
M-84-4-T	4" Male Thread Connection	**491.00**

*Add $100.00 for each additional 6" of thru-wall stainless steel tubing required. For factory cut special lengths, add $53.00 per cut additional.

M-80 and M-81 Series thru-wall waste connection with cleanout tee for stainless steel fixtures with recessed waste connection and 5/16" tappings on 6" centers.

M-84 Series in-wall waste connection for stainless steel fixtures with recessed waste connection and 5/16" tappings.

NOTE: Service weight regularly furnished on fittings above.
NOTE: Always specify fixture manufacturer's model name and number.

†REGULARLY FURNISHED

FIXTURE SUPPORTS

FIG 0672Y, 0674Y NO-HUB VERTICAL CENTERLINE FITTING

FUNCTION: Recommended for use with a floor mounted back outlet water closet.

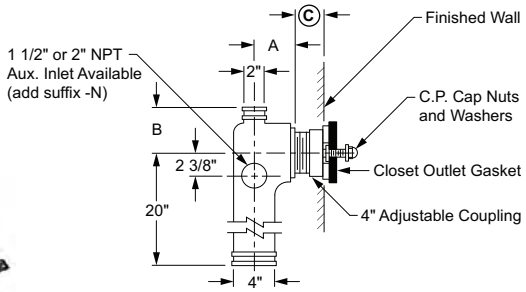

Fig. 0672Y SIDE VIEW

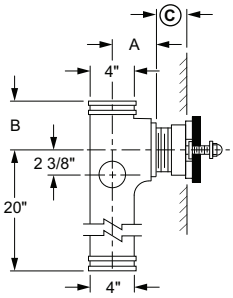

Fig. 0674Y SIDE VIEW

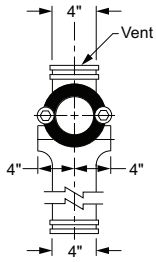

Fig. 0674Y FRONT VIEW

© Dimension as regularly furnished permits a dimension of 3" MIN to 4" MAX. Coupling provides 1/2" adjustment in either direction.

Always specify © dimension required.

Minimum © dimension of 1" available using special male end coupling.

NOTE: When required a 2" NO-HUB Aux. inlet adapter is available specify suffix-NY.

FIGURE NO.	DESCRIPTION	PRICE	NO-HUB A	NO-HUB B	APPROX. WT. LBS.
0672Y	Single–with 2" Vent	**1,877.00**	4"	7"	35
0674Y	Single–with 4" Vent	**1,877.00**	4"	5"	35

The water closet gasket regularly furnished is designed to fit water closet outlet dimensions and configurations shown in ANSI Standard A112.19.2. If gasket is not found to be compatible to fixture due to nonconformance of said fixture to ANSI A112.19.2, then fixture manufacturer shall be consulted for a suitable gasket recommendation. Jay R. Smith assumes no liability for connections to fixtures which do not conform to these standards.

NOTE: Service weight regularly furnished on fittings above.
NOTE: Always specify fixture manufacturer's model name and number.

FIG. 0675 AND 0688 SERIES VERTICAL OFFSET WASTE FITTING WITH SIDE INLET

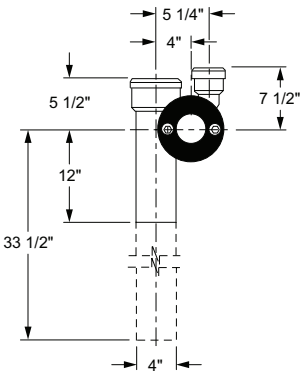

Fig. 0675 FRONT VIEW

DOUBLE

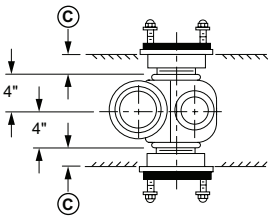

Fig. 0675D TOP VIEW

SINGLE

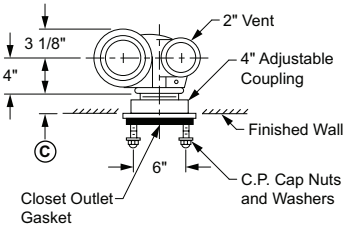

Fig. 0675 TOP VIEW

© Dimension is regularly furnished 4" long. Coupling provides 3/4" adjustment in either direction.

FIGURE NO.	DESCRIPTION	PRICE	APPROX. WT. LBS.
0675L	Single–Left Hand less Inlets	**1,628.00**	56
0675R	Single–Right Hand less Inlets	**1,628.00**	56
0675D	Double less Inlets	**2,742.00**	68
0688L	Single–Left Hand less Inlets	**2,736.00**	48
0688R	Single–Right Hand less Inlets	**2,736.00**	48
0688D	Double less Inlets	**3,847.00**	68

The water closet gasket regularly furnished is designed to fit water closet outlet dimensions and configurations shown in ANSI Standard A112.19.2. If gasket is not found to be compatible to fixture due to nonconformance of said fixture to ANSI A112.19.2, then fixture manufacturer shall be consulted for a suitable gasket recommendation. Jay R. Smith assumes no liability for connections to fixtures which do not conform to these standards.

NOTE: Service weight regularly furnished on fittings above.
NOTE: Always specify fixture manufacturer's model name and number.

†REGULARLY FURNISHED

FIG. 0676Y NO-HUB VERTICAL OFFSET WASTE FITTING

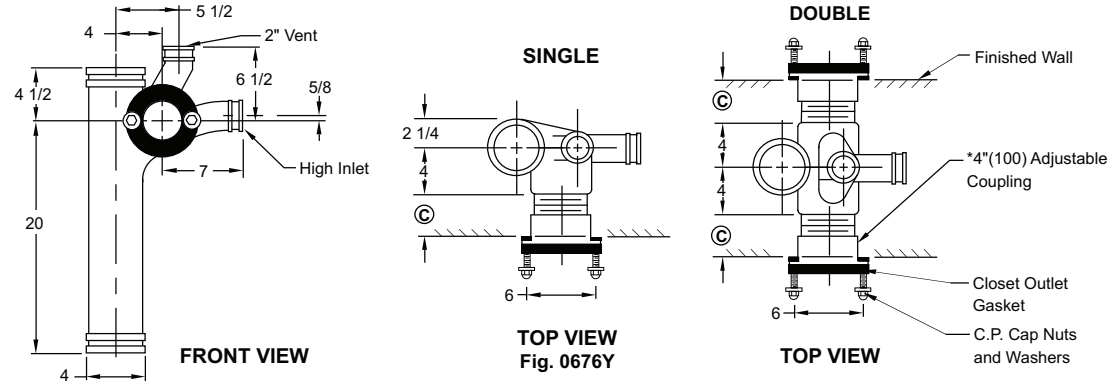

FIGURE NO.	DESCRIPTION	PRICE	APPROX. WT. LBS.
0676LY	LH–w/One High Sanitary Inlet on Vent Side	**2,332.00**	36
0676RY	RH–w/One High Sanitary Inlet on Vent Side	**2,332.00**	36
0676DY	Dbl–w/One High Sanitary Inlet on Vent Side	**3,455.00**	48

NOTES: Fittings shown are regularly furnished with (1) 2" NO-HUB sanitary sweep inlet.
© Dimension as regularly furnished permits a dimension of 3" minimum to 4 1/2" maximum coupling provides 3/4" adjustment in either direction. Always specify © dimension required. Minimum © dimension of 1" available using special male end coupling.

FIG. 0688Y NO-HUB VERTICAL OFFSET WASTE FITTING

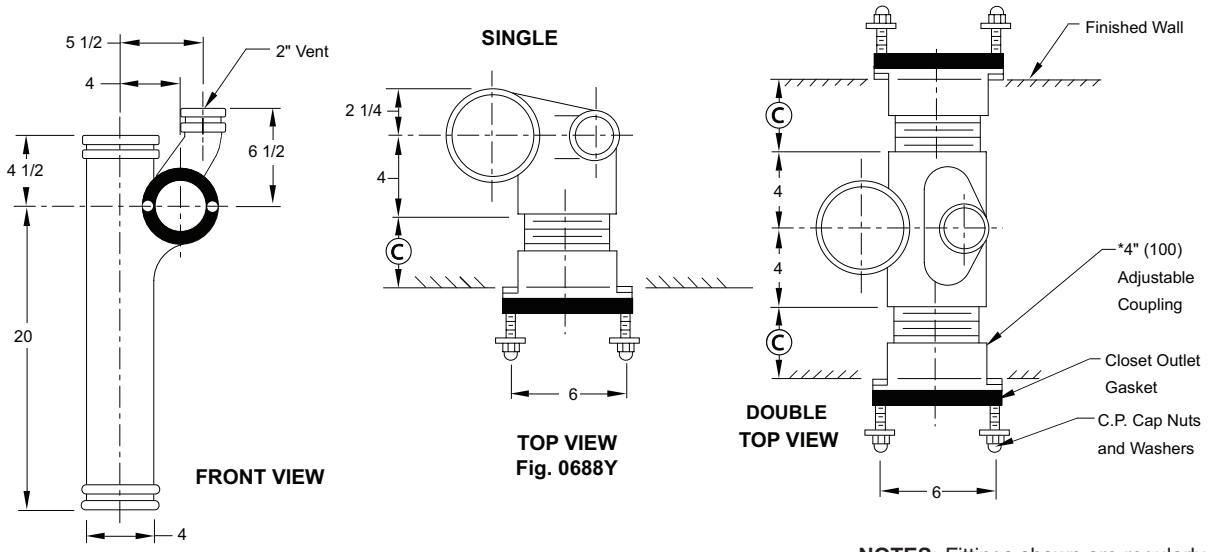

FIGURE NO.	DESCRIPTION	PRICE	APPROX. WT. LBS.
0688LY	Single–Left Hand	**1,873.00**	38
0688RY	Single–Right Hand	**1,873.00**	38
0688DY	Double	**2,983.00**	54

NOTES: Fittings shown are regularly furnished with (1) 2" NO-HUB sanitary sweep inlet.
© Dimension as regularly furnished permits a dimension of 3" minimum to 4 1/2" maximum coupling provides 3/4" adjustment in either direction. Always specify © dimension required. Minimum © dimension of 1" available using special male end coupling.

The water closet gasket regularly furnished is designed to fit water closet outlet dimensions and configurations shown in ANSI Standard A112.19. If gasket is not found to be compatible to fixture due to nonconformance of said fixture to ANSI A112.19.2, then fixture manufacturer shall be consulted for a suitable gasket recommendation. Jay R. Smith assumes no liability for connections to fixtures which do not conform to these standards.

NOTE: Service weight regularly furnished on fittings above.
NOTE: Always specify fixture manufacturer's model name and number.

*Service Weight sized for No Hub.

†REGULARLY FURNISHED

FIXTURE SUPPORTS

VARIATIONS FOR ADJUSTABLE, COMPACT, RESIDENTIAL AND FACE PLATE TYPE FIXTURE SUPPORTS

Adjustable	Compact	Residential	Face Plate	SUFFIX NO	TYPE OF VARIATION DESCRIPTION	APPROX. WT LBS.	ADD FOR SINGLE	ADD FOR DOUBLE
•	•			-95	Test Cap Assembly	1	N/C	N/C
•	•	•	•	-M12	Support for Exposed Flush Valve Supply	1	112.00	224.00
•	•	•	•	-M13	Finishing Frame	1	104.00	208.00
•	•	•	•	-M17	Water Closet Setting Gauge	5	638.00	–
•	•			-M40	Extra Foot Support for Wide Pipe Chase	10	463.00	926.00
•	•		•	-M50	High Set Legs for Raised Closet Support	5	N/C	N/C
•	•			-M54	Face Plate with Side Leg Assembly	22	N/C	N/C
•	•			-M58	Face Plate with “O” Ring Seal and Adjustable ABS Nipple	18	N/C	N/C
•	•			-M58-M54	Face Plate with Side Leg Assembly, “O” Ring Seal and Adjustable ABS Nipple	22	N/C	N/C
•	•			-M73	*Closet Outlet Connection (to 12") for use with Stainless Steel Fixtures	7	983.00	1,966.00
•	•			-M74	*Closet Outlet Connection (to 12") for use with Stainless Steel Fixtures	6	983.00	1,966.00
•	•	•		-M77	Trim less Nipple Kit		N/C	N/C
•	•			-2	Cast Iron Outlet Connection, Type 2 Female Coupling	–	54.00	108.00
•	•			-2M	Cast Iron Outlet Connection, Type 2M Male Coupling	–	54.00	108.00
•	•	•		-N	Each Tapped Auxiliary Inlet, 1 1/4", 1 1/2", or 2"	–	465.00	–
•	•			-G	Galvanized Support	–	POA	POA
•	•	•	•	U	Vandal Proof Trim	–	171.00	342.00
•	•			99	Coupling Wrench	–	139.00	–
•	•				Cast Iron or PVC Outlet Nipple & Steel Studs, 13–34", PER INCH	–	129.00	258.00
		•			Residential Coupling over 3", PER INCH	–	73.00	146.00
•	•	•	•		Closet Outlet Gasket, Felt or Neoprene	1	N/C	N/C
•					Alternate Vent Locations, Vertical Fittings Only	–	N/C	N/C
				SUFFIX NO	TYPE OF VARIATION DESCRIPTION	APPROX. WT LBS.	DEDUCT FOR SINGLE	DEDUCT FOR DOUBLE
•	•			-NC	Less Nipple and Coupling	–	168.00	336.00

NOTE: Service weight regularly furnished on fittings above.
NOTE: Always specify fixture manufacturer's model name and number.

†REGULARLY FURNISHED

MISCELLANEOUS URINAL/LAVATORY AND SINK SUPPORTS
ALWAYS SPECIFY FIXTURE MFR'S NAME AND NUMBER WHEN ORDERING

FIGURE NO.	PRICE
0600SP	**933.00**
0620	**1,026.00**
0620-SP	**920.00**
0636D-M32	**1,178.00**
0637D-M32	**1,395.00**
0642	**1,078.00**
0643D-M31-A	**1,395.00**
0644D-M31	**1,395.00**
0702	**1,178.00**
0702D	**2,542.00**
0721	**697.00**
0721E	**1,034.00**
0724	**697.00**
0730	**697.00**
0732	**625.00**
0733	**1,082.00**
0740	**1,805.00**
0740D	**2,640.00**
0751	**1,811.00**
0752-15-M30-M31	**1,811.00**
0752-15-M30-M32	**1,811.00**
0758	**3,860.00**
0758D	**5,894.00**
0758-M31-42	**4,447.00**
0758-M31-43	**6,496.00**
0771-11	**1,164.00**
0771-15	**1,164.00**
0773	**1,164.00**
0781	**1,164.00**
0784	**934.00**
0790	**816.00**
0791	**816.00**
0800D	**1,271.00**
0802-M32	**1,075.00**
0802D	**1,395.00**

FIGURE NO.	PRICE
0810-M32	**1,075.00**
0810D-M32	**1,179.00**
0811-M32	**1,269.00**
0813-M32	**1,269.00**
0814-M32	**1,269.00**
0814D	**1,925.00**
0816	**POA**
0820-M32	**934.00**
0823	(Contact factory w/Fixture Model)
0824	(Contact factory w/Fixture Model)
0824D	(Contact factory w/Fixture Model)
0825D	**650.00**
0826D	**534.00**
0827-BH	**301.00**
0827-CH	**301.00**
0827-SS	**301.00**
0827D	**603.00**
0830	**1,078.00**
0830D	**1,327.00**
0834	(Contact factory w/Fixture Model)
0848	(Contact factory w/Fixture Model)
0848-1	(Contact factory w/Fixture Model)
0848-3	(Contact factory w/Fixture Model)
0848-4KW	(Contact factory w/Fixture Model)
0848D	(Contact factory w/Fixture Model)
0849	(Contact factory w/Fixture Model)
0849-2	(Contact factory w/Fixture Model)
0849-3	(Contact factory w/Fixture Model)
0849-4	(Contact factory w/Fixture Model)
0850-1-M32	**3,208.00**
0850-11	**3,208.00**
0850-15	**3,208.00**
0851-11	**1,877.00**
0851-15	**1,877.00**
0851-3-M32	**1,877.00**

FIGURE NO.	PRICE
0860	(Contact factory w/Fixture Model)
0860-3	(Contact factory w/Fixture Model)
0860-4	(Contact factory w/Fixture Model)
0862-A26-M32	**2,287.00**
0862-HT	**2,287.00**
0864	(Contact factory w/Fixture Model)
0864-3	(Contact factory w/Fixture Model)
0866	(Contact factory w/Fixture Model)
0866-1-M31	(Contact factory w/Fixture Model)
0866-2-M31	(Contact factory w/Fixture Model)
0866-3-M31	(Contact factory w/Fixture Model)
0867	(Contact factory w/Fixture Model)
0868	(Contact factory w/Fixture Model)
0868-1-M32	(Contact factory w/Fixture Model)
0868D-Z	(Contact factory w/Fixture Model)
0869	(Contact factory w/Fixture Model)
0870	**2,026.00**
0870-M31-CMP	**2,074.00**
0870-41-M31	**2,885.00**
0870-42-M31	**2,885.00**
0870-43-M31	**3,293.00**
0870-43-M31CMP	**3,512.00**
0870-CB42	**2,357.00**
0870-CB43	**4,283.00**
0870-D-M31CMP	**3,353.00**
0870-Z	**2,026.00**
0920	**1,255.00**
0921	**1,255.00**
M79LY	**2,506.00**

ORDERING GUIDELINES

0700-0900 SERIES

After identifying the proper options required to meet the engineering specification, place order as shown below:

Examples:

0700D (-27-M31)

- Figure No.
- Type of Support (Double)
- Arm Size (25")
- Type of Uprights (Rectangular)
- Type of Uprights (Round) (-M32)

0800 (-KW-M31)

- Figure No.
- Knee Action Valve
- Type of Uprights (Rectangular)

*All variation suffixes are to be shown in parenthesis.
**Refer to submittal for arm size required.

Example: -M24 Extension Adaptor
Order as follows: -M2404

Sizes Available:

03 - 3"
04 - 4 1/4"
05 - 5"
06 - 6"
07 - 7 1/2"

LAVATORY & SINK SUPPORTS

Fig. 0700

Fig. 0700 (-E)

Fig. 0700 (-M31)

Fig. 0700 (-27-M31)

Fig. 0710

Fig. 0710 (-E)

Fig. 0720 (-E)

Fig. 0722 (-E)

Fig. 0723 (-E)

Fig. 0728 (-E)

Fig. 0750

Fig. 0752

Fig. 0760

Fig. 0762

Fig. 0770

Fig. 0780

Fig. 0790

Fig. 0792

Fig. 0800

Fig. 0801

Fig. 0805

Fig. 0823

Fig. 0824

Fig. 0825-0827

Fig. 0826-0828

Fig. 0830

Fig. 0831

Fig. 0844

Fig. 0870

Fig. 0871

Fig. 0914

Fig. 0915

Fig. 0924

Fig. 0925

TECHNICAL DATA

Fixture supports have been designed to secure and support lavatories, sinks, electric water coolers, hospital service and scrub-up sinks, and many other types of off-the-floor fixtures. The supports for these fixtures are divided into two general categories: Floor Mounted Supports and Wall Mounted Supports.

"SURE-SET" CONCEALED ARMS

Specification and installation of "off-the-floor" lavatories, sinks and similar fixtures has greatly accelerated due to their many superior qualities. Smith engineers, recognizing this trend have greatly improved the existing methods of supporting these fixtures and among these improvements, sure-set concealed arms provide the most reliable method of supporting lavatories on concealed arms.

ENGINEERED FEATURES OF THE SMITH "SURE-SET" CONCEALED ARM

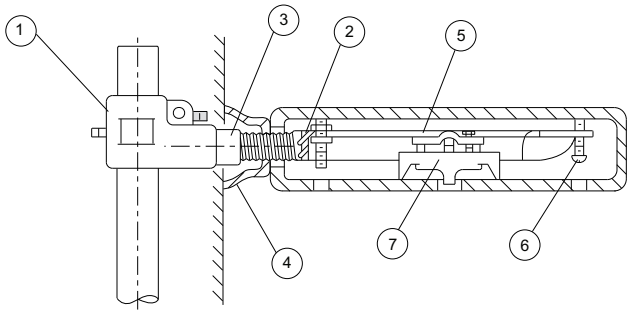

① **Adjustable Sleeve** - Adjusts vertically to meet specific rough-in heights and is threaded internally to receive concealed arm.

② **Threaded Concealed Arm** - Easily threaded into the adjustable sleeve for positive fixture support.

③ **Extended Lock Nut** - Accessible from the face of finished wall permanently locks the concealed arm in place.

④ **Threaded Escutcheon** - Chrome Plated and threaded to the concealed arm, stays permanently in place.

⑤ **Adjustment Slot** - Provides ease of adjusting locking device to suit the roughing-in dimensions of the fixture specified.

⑥ **Leveling Screws** - Are provided for proper leveling of fixture.

⑦ **"Sure-set" Locking Device** - Two serrated locking surfaces grip the bottom of the lavatory, permanently locking fixture to arm. Locking device boss protrudes through punching in underside of lavatory to prevent removal of the lavatory from the arm.

⑧ **Packaging** - Arms are separately packaged and fully assembled, ready for installation.

TYPICAL ARRANGEMENTS OF FLOOR AND WALL MOUNTED SUPPORTS

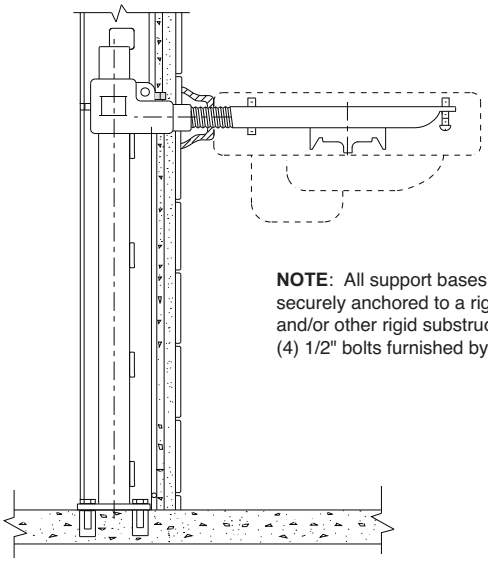

NOTE: All support bases must be securely anchored to a rigid floor and/or other rigid substructure with (4) 1/2" bolts furnished by others.

"PRO-SET" FLOOR MOUNTED UPRIGHT SUPPORT - "Pro-Set" is the trade name for the Smith system using uprights welded to base plates. This applies to round or rectangular uprights. The function of the support is to provide the means of mounting an off-the-floor fixture so that the vertical load bearing members are completely concealed inside the wall. This system has no external contact with the finished floor inside the room.

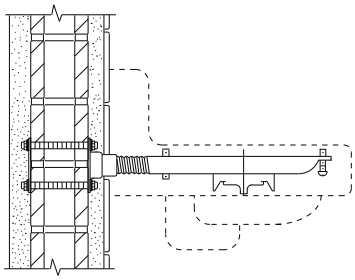

WALL MOUNTED SUPPORT - The function of this support is to provide for securing of the fixture to the wall in areas where a floor mounted support cannot be installed. The wall structure must be of sufficient strength to support the entire weight of the fixture.

NOTE: Single Plates for Battery Applications Available See Figs. 0722, 0722 (-E), 0728 and 0728 (-E).

REGULARLY FURNISHED: Floor or wall mounted supports with concealed or exposed arms, and/or with plate and studs as indicated by figure number selected. Exposed arm assemblies are acid resistant coated. Base supports for floor mounted type are welded to uprights. Escutcheons and exposed trim are chromium plated.

NOTE: SMITH provides Fixture Support Selection Guides which list the proper support for the fixture specified. Also furnished with each shipment of fixture supports are rough-in instructions of the support specified.

FURNISHED WHEN SPECIFIED - Exposed arm plate and studs with vandal proof trim. To specify, add Suffix -U to figure number of support desired.

NOTE: When ordering lavatories for use with concealed arms, it should be so stated to the fixture manufacturer so that the proper fixture will be furnished for use with a concealed arm support.

Although the concealed arm type of fixture support is the most popular today because of the various installation and esthetic features, there are two other basic types of fixture supports.

EXPOSED ARM SUPPORT

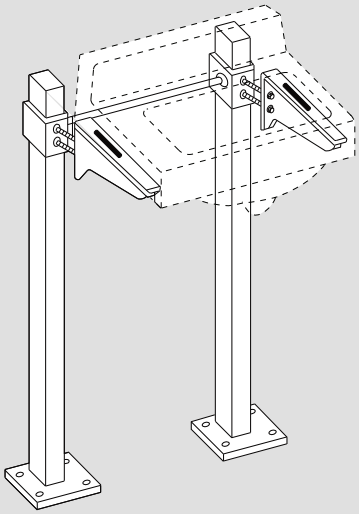

HANGER TYPE SUPPORT

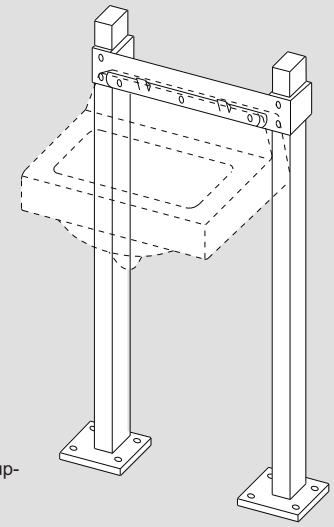

NOTE: It is recommended that Suffix -M31, 1 x 3 rectangular uprights (as shown) be used in non-load bearing wall construction.

Vitreous China lavatory designed for use with acid resistant coated exposed arm support. Specify Fig. 0870 (-M31).

Enameled iron high back lavatory supported on a hanger type fixture support. Specify Fig. 0800 (-M31).

SUPPORTS FOR HOSPITAL AND HANDICAPPED FIXTURES

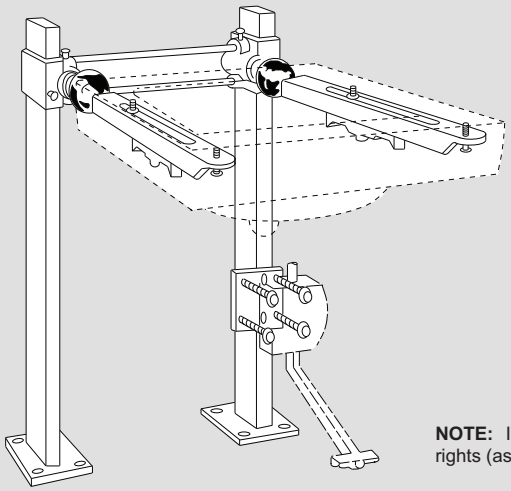

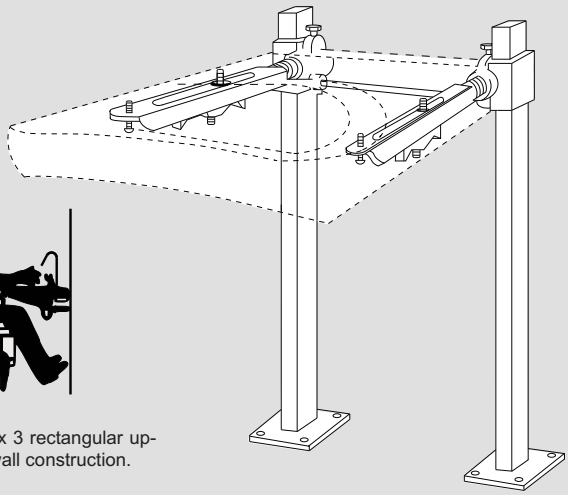

NOTE: It is recommended that Suffix -M31, 1 x 3 rectangular uprights (as shown) be used in non-load bearing wall construction.

Surgeon's Lavatory - With pedal operated mixing valve for use in patient care areas. Specify Fig. 0700 (-E-KW-M31).

Wheelchair Lavatory -This lavatory has been expressly designed for wheelchair patient's needs. It provides adequate space beneath it for the wheelchair. Specify Fig. 0700 (-27-M31).

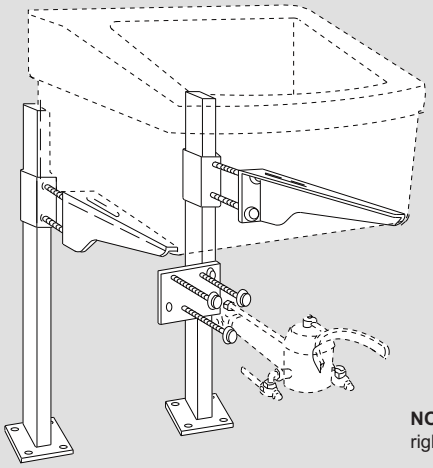

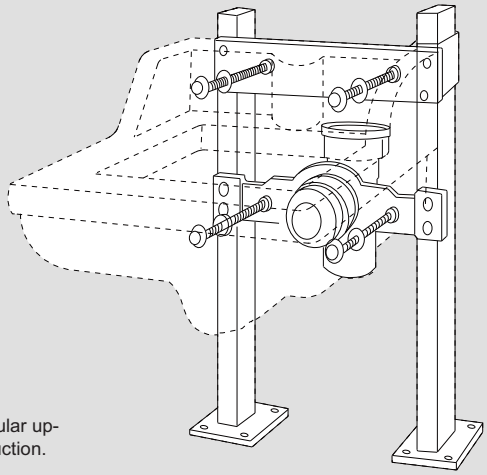

NOTE: It is recommended that Suffix -M31, 1 x 3 rectangular uprights (as shown) be used in non-load bearing wall construction.

Surgeon's Scrub-up-Sink - For use in scrub rooms, emergency rooms and treatment areas, with knee-operated valve. Specify Fig. 0870 (-KW-M31).

Clinic Service Sink - For use in utility rooms, emergency rooms and clean-up rooms. Specify Fig. 0915 (-M31). This support is supplied with a waste fitting and an adjustable coupling.

Always specify fixture make, number and size. Specify knee-action or pedal valve name and number when required.

VARIATIONS AND INSTALLATION

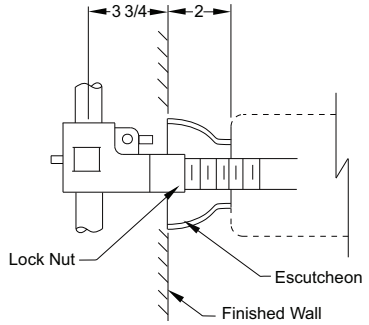

SUFFIX -E Threaded Escutcheon. When using lavatories of the flat slab type, the manufacturer requires a 2" dimension from the face of the wall to the rear of the lavatory. The 2" dimension prevents water from accumulating at the wall and causing deterioration. The escutcheon is chrome plated and is available on all concealed arm type supports. Add Suffix -E to figure number required.

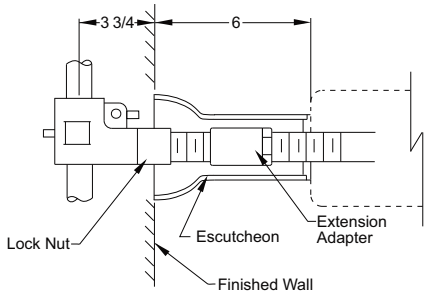

SUFFIX -E6 6" Long Threaded Escutcheon. When lavatories of the flat slab type are to be set away from the wall beyond the normal 2" setting, a 6" long escutcheon is provided with the same threaded arrangement as the regular 2" escutcheon. This escutcheon is chrome plated and is available on all concealed arm type supports. Add Suffix -E6 to figure number required.

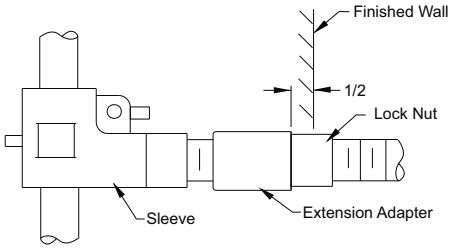

SUFFIX -M24 Extension Adaptor for Concealed Arm Support. When the standard (3 3/4") dimension from the face of the wall to the centerline of support upright, as shown in the illustration, is exceeded, use Suffix -M24 extension adaptor. The face of the extension adaptor should be set 1/2" in back of finished wall so the standard concealed arm and locking arrangement can be used for the lavatory regardless of the wall thickness. Add Suffix -M24 to Fig. No. required.

NOTE: Always specify overall wall thickness and center line of support location.

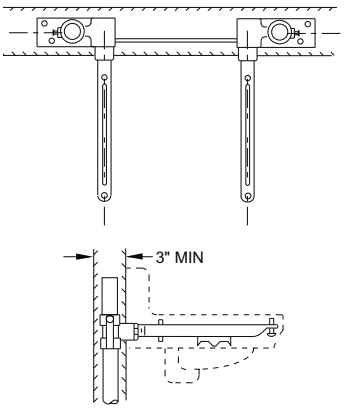

SUFFIX -Z Special Narrow Sleeve and Base for Concealed Arm Support. When a concealed arm lavatory support is to be installed in a narrow wall, a special narrow concealed arm sleeve and base are available for this type of installation. Add Suffix -Z to figure number required.

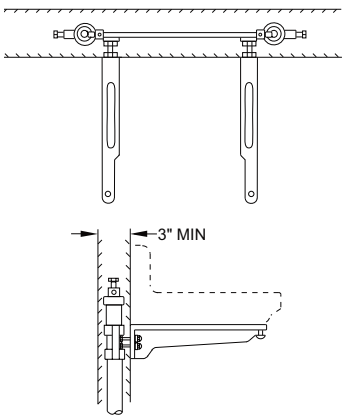

SUFFIX -Z Special Narrow Sleeve and Base for Exposed Arm Support. When an exposed arm lavatory or sink support is to be installed in a narrow wall, a special narrow sleeve and base are available for this type of installation. Add Suffix -Z to figure number required.

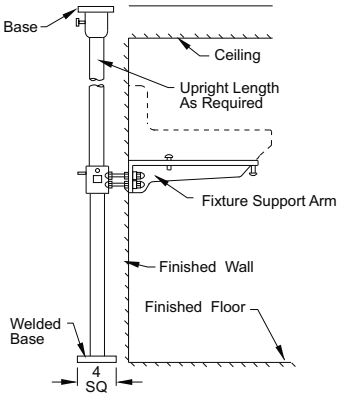

SUFFIX -M11 Floor-to-Ceiling Uprights When required, floor mounted fixture supports can be supplied with floor-to-ceiling uprights for securing to the floor and to the ceiling above. Add Suffix -M11 to figure number required.

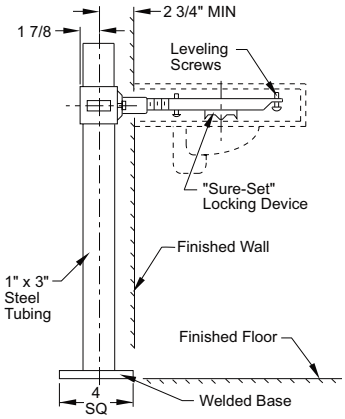

SUFFIX -M31 Rectangular Steel Uprights with Welded Bases. For use with metal stud and sheet rock wall construction. The rectangular shape upright offers greater structural strength and does not rely on the wall construction for support of the fixture. The rectangular upright keeps deflection to a minimum. For use with all floor mounted fixture supports. Add Suffix -M31 to figure number required.

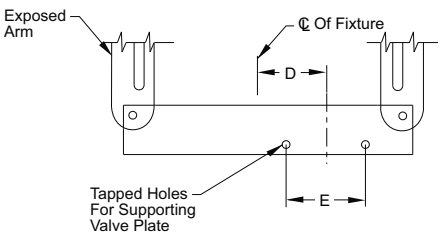

SUFFIX -KF Supporting Bar for Fixture Mounted Knee-Action Valve. Can be furnished on any exposed arm, wall or floor mounted sink support. Add Suffix -KF to figure number required.

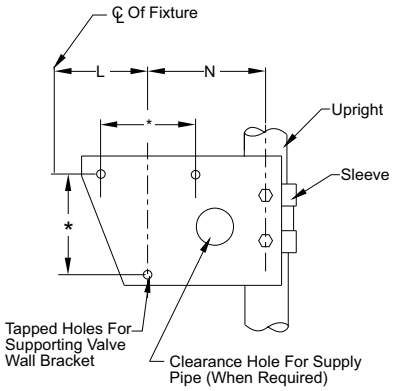

*Dimension based on valve used.

SUFFIX -KW Supporting Plate for Wall Mounted Knee-Action Valve. Can be furnished on any floor mounted lavatory or sink support. Add Suffix -KW to figure number required.

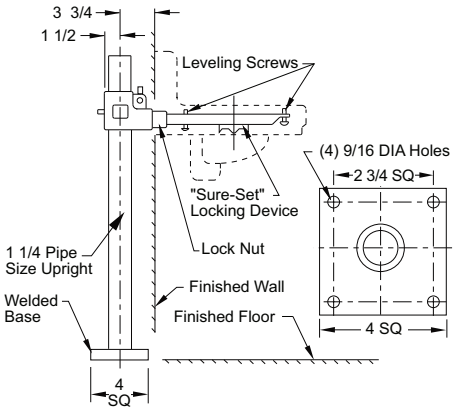

WELDED BASE Regularly Furnished. Round steel upright with welded base. Used with floor mounted fixture supports. The base should be securely anchored to the floor construction w/(4) 1/2" bolts. (By others)

FIXTURE SUPPORTS

FIG. 0700, 0700D LAVATORY SUPPORTS WITH CONCEALED ARMS FLOOR MOUNTED WITH "PRO-SET" UPRIGHTS FOR HIGH BACK LAVATORIES

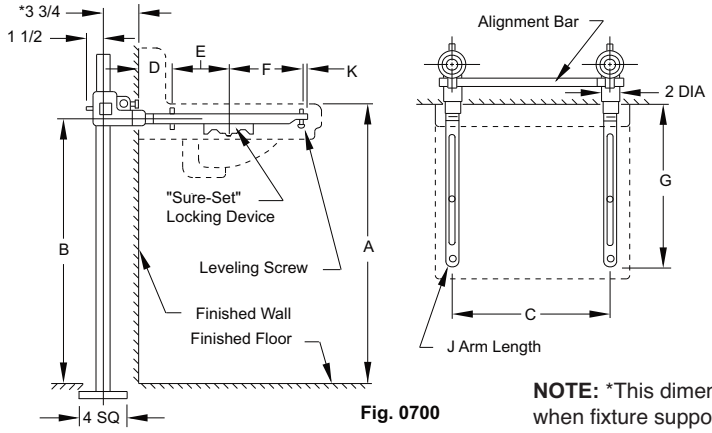

Fig. 0700

NOTE: *This dimension can be increased when fixture support is to be installed behind the wall. (Specify when required and wall thickness).

For lettered dimensions contact factory.

FIGURE NO.	DESCRIPTION	PRICE	APPROX. WT. LBS.
0700	Single Support	**1,271.00**	29
0700D	Back to Back Support	**1,811.00**	41

FIG. 0700-27, 0700-27-M31, 0700D-27-M31 LAVATORY SUPPORTS WITH CONCEALED ARMS FLOOR MOUNTED TYPE FOR FLAT SLAB LAVATORIES

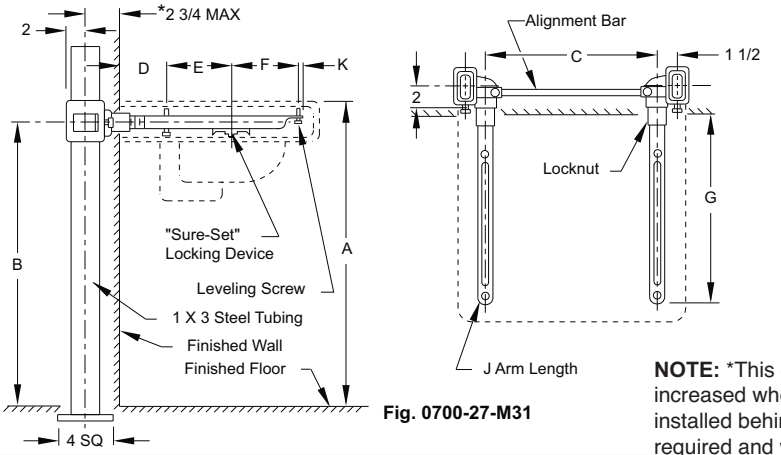

Fig. 0700-27-M31

NOTE: *This dimension can be increased when fixture support is to be installed behind the wall. (Specify when required and wall thickness).

For lettered dimensions contact factory.

FIGURE NO.	DESCRIPTION	PRICE	APPROX. WT. LBS.
0700-27	Single Support for Wheelchair Lavatories	**1,358.00**	34
0700-27-M31	Single Support for Wheelchair Lavatories with Heavy Duty Rectangular Uprights	**1,358.00**	34
0700D-27-M31	Double Support for Wheelchair Lavatories with Heavy Duty Rectangular Uprights	**1,983.00**	40

FIG. 0700E, 0700DE LAVATORY SUPPORTS WITH CONCEALED ARMS FLOOR MOUNTED TYPE FOR FLAT SLAB LAVATORIES

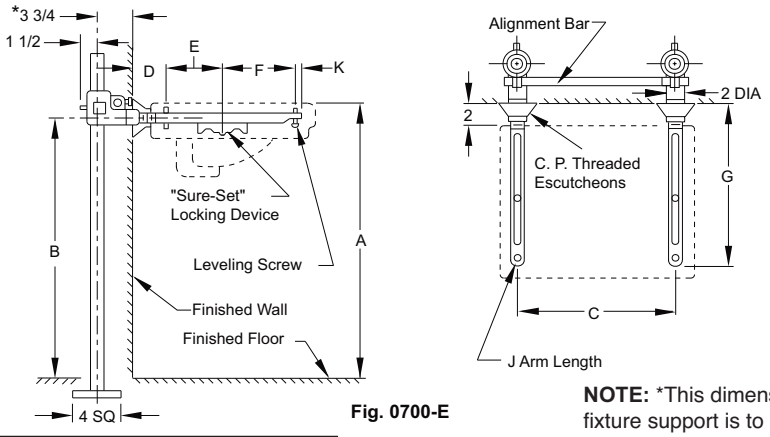

Fig. 0700-E

NOTE: *This dimension can be increased when fixture support is to be installed behind the wall. (Specify when required and wall thickness).

For lettered dimensions contact factory.

FIGURE NO.	DESCRIPTION	PRICE	APPROX. WT. LBS.
0700E	Single Support w/2" CP Escutcheons	**1,485.00**	30
0700DE	Back to Back Support w/2" CP Escutcheons	**2,235.00**	42

NOTE: Service weight regularly furnished on fittings above.
NOTE: Always specify fixture manufacturer's model name and number.

†REGULARLY FURNISHED

FIG. 0710, 0710D LABOR SAVER® LAVATORY SUPPORTS FLOOR MOUNTED TYPE FOR HIGH BACK LAVATORIES

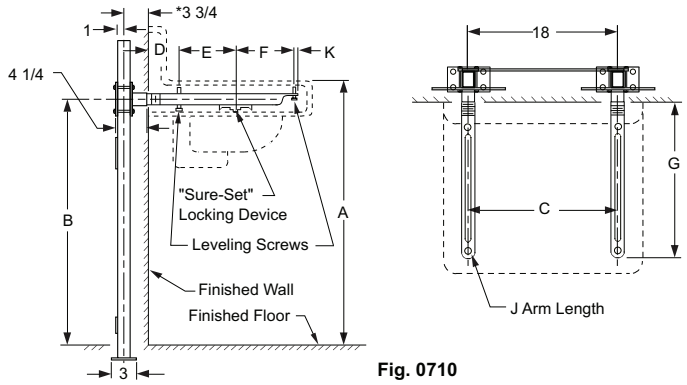

Fig. 0710

FIGURE NO.	DESCRIPTION	PRICE	APPROX. WT. LBS.
0710	Single Support	**1,666.00**	29
0710D	Back to Back Support	**2,353.00**	41

NOTE: *This dimension can be increased when fixture support is to be installed behind the wall. (Specify when required and wall thickness).

For lettered dimensions contact factory.

FIG. 0710-27, 0710D-27 LABOR SAVER® LAVATORY SUPPORTS FLOOR MOUNTED TYPE FOR FLAT SLAB LAVATORIES

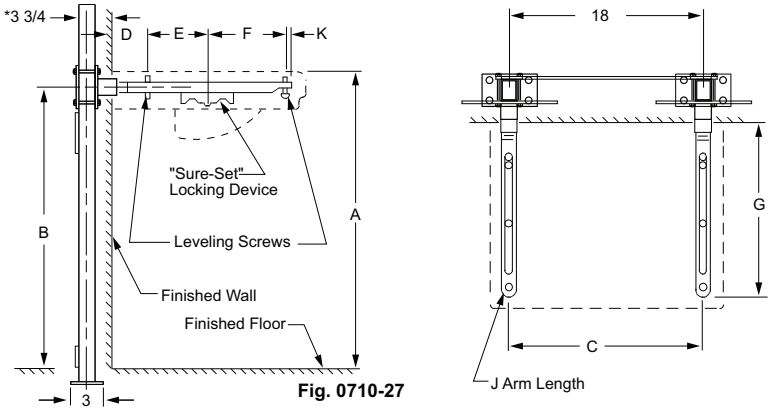

Fig. 0710-27

FIGURE NO.	DESCRIPTION	PRICE	APPROX. WT. LBS.
0710-27	Single Support for Wheelchair Lavatories	**1,750.00**	34
0710D-27	Double Support for Wheelchair Lavatories	**2,525.00**	42

NOTE: *This dimension can be increased when fixture support is to be installed behind the wall. (Specify when required and wall thickness).

For lettered dimensions contact factory.

FIG. 0710E, 0710DE LABOR SAVER® LAVATORY SUPPORTS FLOOR MOUNTED TYPE FOR FLAT SLAB LAVATORIES

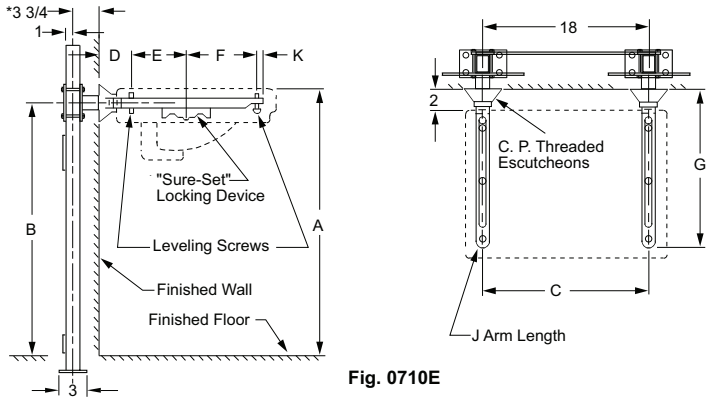

Fig. 0710E

FIGURE NO.	DESCRIPTION	PRICE	APPROX. WT. LBS.
0710E	Single Support w/2" CP Escutcheons	**1,879.00**	30
0710DE	Back to Back Support w/2" CP Escutcheons	**2,775.00**	42

NOTE: *This dimension can be increased when fixture support is to be installed behind the wall. (Specify when required and wall thickness).

For lettered dimensions contact factory.

NOTE: Service weight regularly furnished on fittings above.
NOTE: Always specify fixture manufacturer's model name and number.

†REGULARLY FURNISHED

FIG. 0720, 0722, 0723, 0727, 0728 LAVATORY SUPPORTS WALL MOUNTED TYPE FOR HIGH BACK LAVATORIES–SINGLE SUPPORT

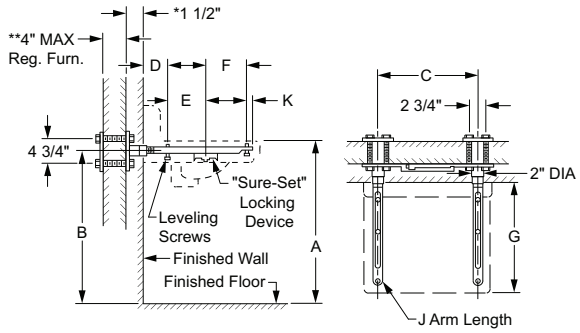

Fig. 0720

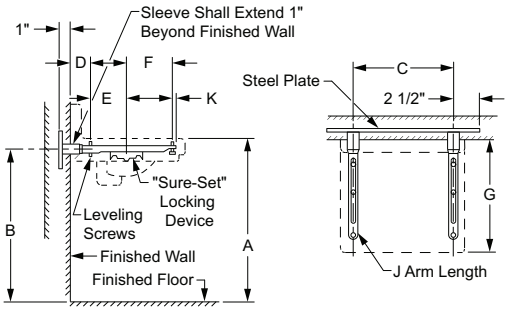

Fig. 0722

* This dimension can be increased when required. (Specify thickness)

**For greater wall thickness, longer supporting studs can be furnished. (Specify wall thickness)

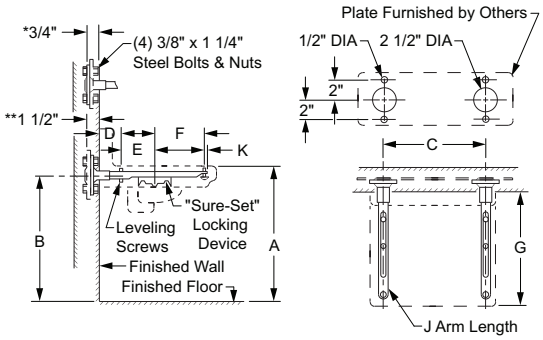

Fig. 0723

* Arm support bracket shown bolted in back of wall plate for plaster wall construction.

**Arm support bracket shown bolted in front of wall plate for tile wall construction.

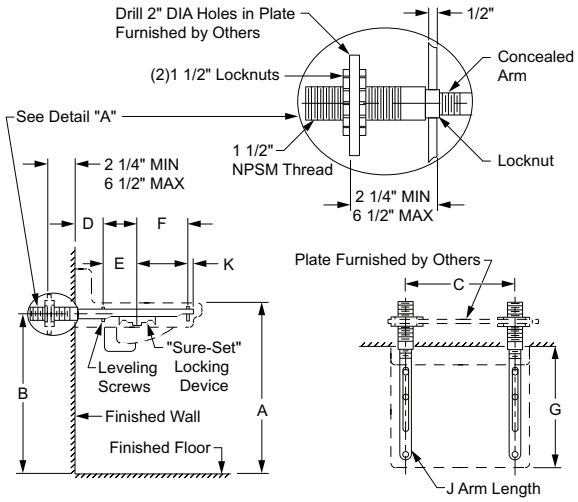

Fig. 0727

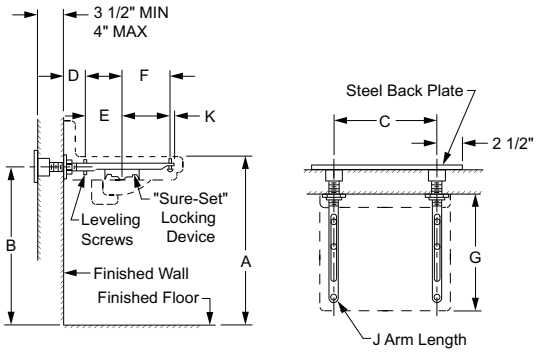

Fig. 0728

For lettered dimensions contact factory.

FIGURE NO.	DESCRIPTION	PRICE	APPROX. WT. LBS.
0720	Set on Masonry or Stud Wall	**753.00**	22
0722	Set on Steel Plate Secured in Wall	**589.00**	22
0723	To Attach to Backing Plate Secured in Wall	**589.00**	22
0727	Using Adjustable Extension	**753.00**	23
0728	Set on Steel Plate Secured to Glazed Block Wall	**753.00**	24

NOTE: Service weight regularly furnished on fittings above.
NOTE: Always specify fixture manufacturer's model name and number.

†REGULARLY FURNISHED

FIG. 0720E, 0722E, 0723E, 0727E, 0728E LAVATORY SUPPORTS WALL MOUNTED TYPE FOR FLAT SLAB LAVATORIES–SINGLE SUPPORT

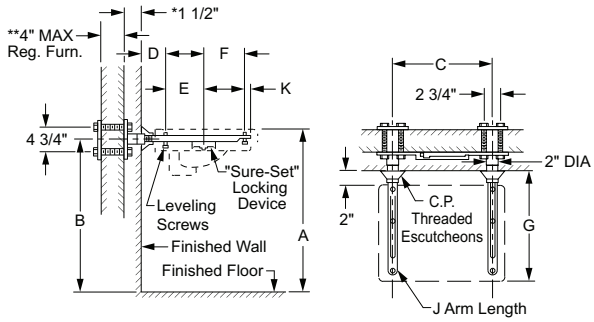

Fig. 0720E

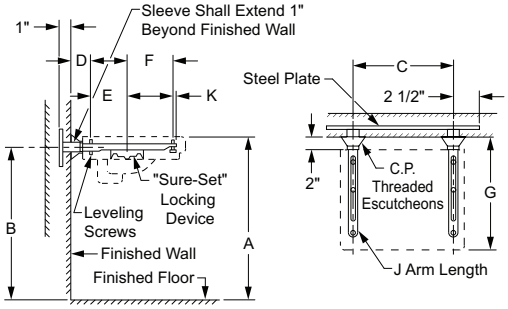

Fig. 0722E

* This dimension can be increased when required. (Specify thickness)

**For greater wall thickness, longer supporting studs can be furnished. (Specify wall thickness)

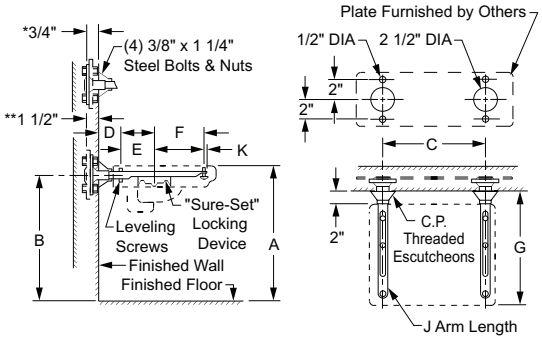

Fig. 0723E

* Arm support bracket shown bolted in back of wall plate for plaster wall construction.

** Arm support bracket shown bolted in front of wall plate for tile wall construction.

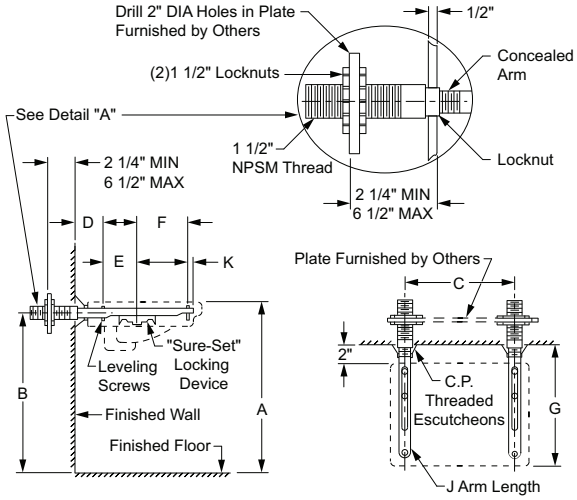

Fig. 0727E

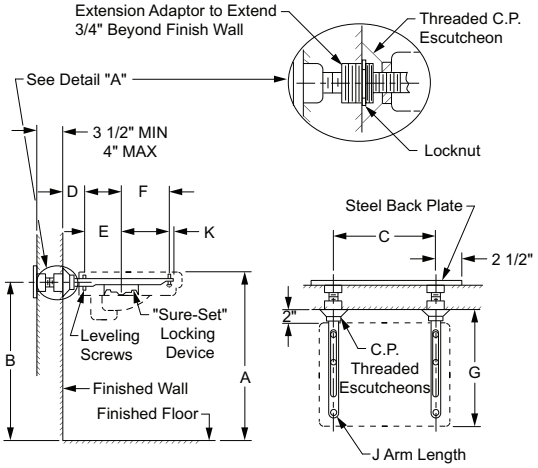

Fig. 0728E

For lettered dimensions contact factory.

FIGURE NO.	DESCRIPTION	PRICE	APPROX. WT. LBS.
0720E	Set on Masonry or Stud Wall	**961.00**	24
0722E	Set on Steel Plate Secured in Wall	**802.00**	24
0723E	To Attach to Backing Plate Sec'd in Wall	**802.00**	24
0727E	Using Adjustable Extension	**966.00**	25
0728E	Set on Steel Plate Secured to Glazed Block Wall	**966.00**	26

NOTE: Service weight regularly furnished on fittings above.
NOTE: Always specify fixture manufacturer's model name and number.

†REGULARLY FURNISHED

FIG. 0750, 0750D LAVATORY SUPPORTS WITH ARC EXPOSED ARMS FLOOR MOUNTED TYPE FOR FLAT SLAB AND HIGH BACK LAVATORIES

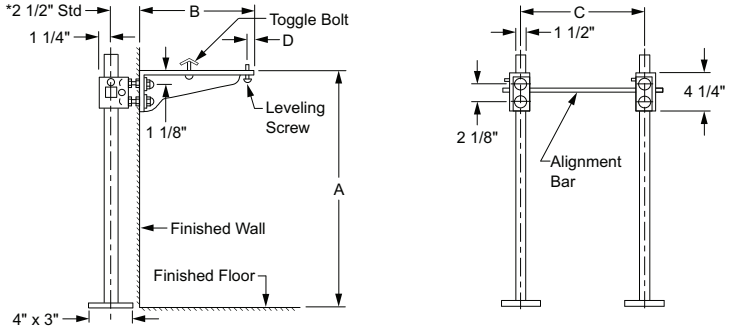

Fig. 0750

FIGURE NO.	DESCRIPTION	PRICE	APPROX. WT. LBS.
0750	Single Support	**1,811.00**	32
0750D	Back to Back Support	**2,845.00**	41

NOTE: *This dimension can be increased when fixture support is to be installed behind the wall. (Specify when required and wall thickness).

NOTE: For metal stud wall construction, specify Suffix -M31 rectangular steel upright with welded base for greater strength.

For lettered dimensions contact factory.

FIG. 0752, 0752D LAVATORY SUPPORTS WITH ARC EXPOSED ARMS FLOOR MOUNTED TYPE FOR HIGH BACK ENAMELED IRON LAVATORIES

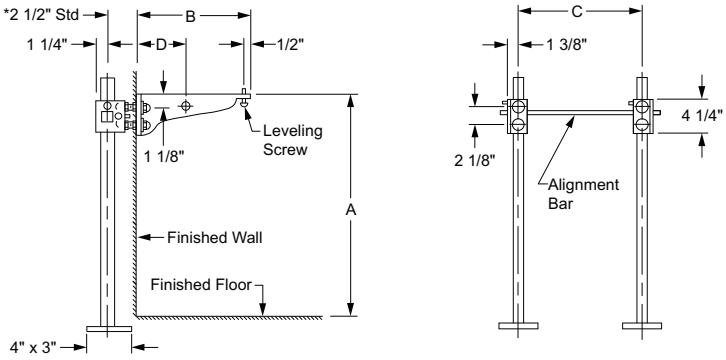

Fig. 0752

NOTE: *This dimension can be increased when fixture support is to be installed behind the wall. (Specify when required and wall thickness).

NOTE: For metal stud wall construction, specify Suffix -M31 rectangular steel upright with welded base for greater strength.

For lettered dimensions contact factory.

FIGURE NO.	DESCRIPTION	PRICE	APPROX. WT. LBS.
0752	Single Support for Wheelchair Lavatories	**1,811.00**	26
0752D	Single Support for Wheelchair Lavatories	**2,845.00**	33

NOTE: Service weight regularly furnished on fittings above.
NOTE: Always specify fixture manufacturer's model name and number.

†REGULARLY FURNISHED

FIG. 0760, 0760D LABOR SAVER® LAVATORY SUPPORTS WITH ARC EXPOSED ARMS FLOOR MOUNTED TYPE FOR FLAT SLAB AND HIGH BACK LAVATORIES

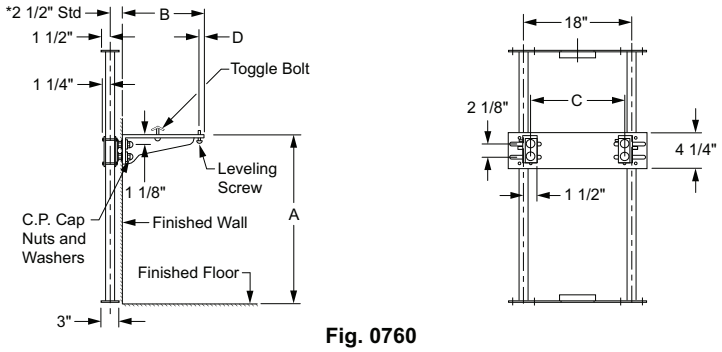

Fig. 0760

NOTE: *This dimension can be increased when fixture support is to be installed behind the wall. (Specify when required and wall thickness).

For lettered dimensions contact factory.

FIGURE NO.	DESCRIPTION	PRICE	APPROX. WT. LBS.
0760	Single Support	**2,353.00**	32
0760D	Back to Back Support	**3,700.00**	41

FIG. 0762, 0762D LABOR SAVER® LAVATORY SUPPORTS WITH ARC EXPOSED ARMS FLOOR MOUNTED TYPE FOR HIGH BACK ENAMELED IRON LAVATORIES

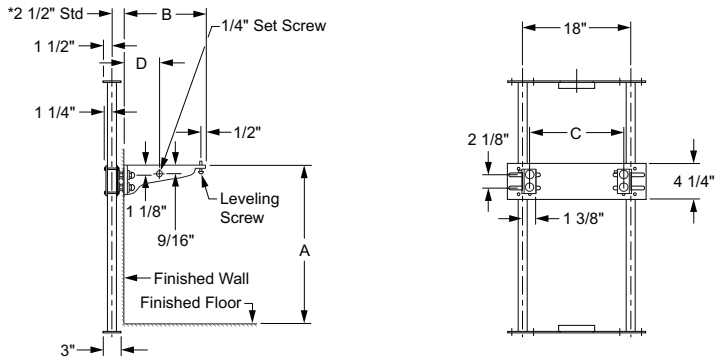

Fig. 0762

NOTE: *This dimension can be increased when fixture support is to be installed behind the wall. (Specify when required and wall thickness).

For lettered dimensions contact factory.

FIGURE NO.	DESCRIPTION	PRICE	APPROX. WT. LBS.
0762	Single Support for Wheelchair Lavatories	**2,353.00**	26
0762D	Double Support for Wheelchair Lavatories	**3,700.00**	33

NOTE: Service weight regularly furnished on fittings above.
NOTE: Always specify fixture manufacturer's model name and number.

†REGULARLY FURNISHED

FIG. 0770, 0780, 0790, LAVATORY SUPPORTS WITH ARC EXPOSED ARMS WALL MOUNTED TYPE FOR FLAT SLAB AND HIGH BACK LAVATORIES

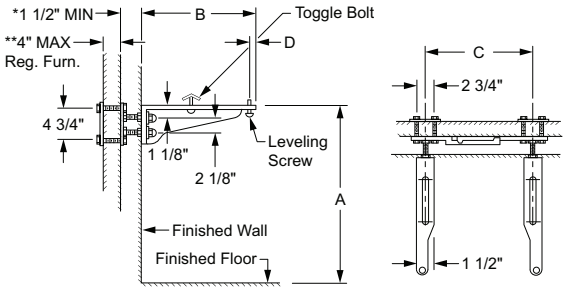

* This dimension can be increased when required (specify wall thickness).
** For greater wall thickness, longer support studs can be furnished (specify wall thickness).

Fig. 0770

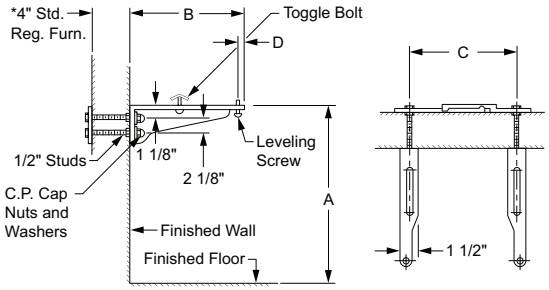

* This dimension can be increased when required (specify wall thickness).

Fig. 0780

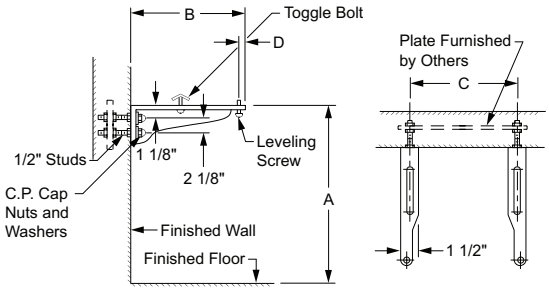

For lettered dimensions contact factory.

Fig. 0790

FIGURE NO.	DESCRIPTION	PRICE	APPROX. WT. LBS.
0770	Set on Masonry or Stud Wall	**1,257.00**	24
0780	Set on Glazed Block Wall	**1,257.00**	23
0790	To Attach to Backing Plate Secured in Wall	**816.00**	23

FIG. 0772, 0782, 0792 LAVATORY SUPPORTS WITH ARC EXPOSED ARMS FLOOR MOUNTED TYPE FOR HIGH BACK ENAMELED IRON LAVATORIES

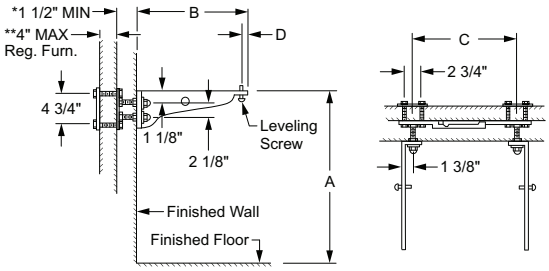

* This dimension can be increased when required (specify wall thickness).
** For greater wall thickness, longer support studs can be furnished (specify wall thickness).

Fig. 0772

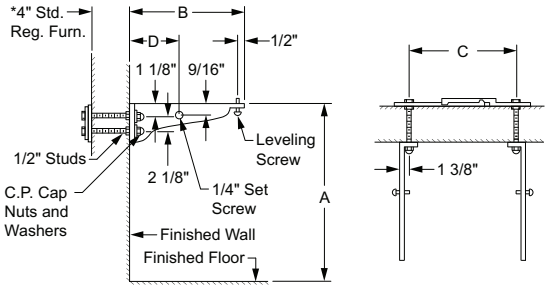

* This dimension can be increased when required (specify wall thickness).

Fig. 0782

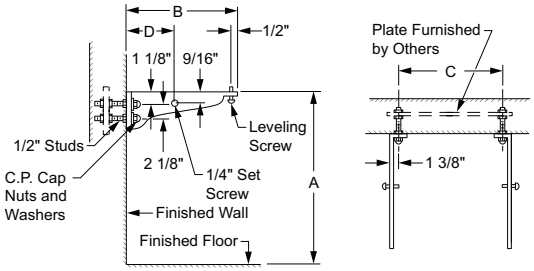

For lettered dimensions contact factory.

Fig. 0792

FIGURE NO.	DESCRIPTION	PRICE	APPROX. WT. LBS.
0772	Set on Masonry or Stud Wall	**1,257.00**	18
0782	Set on Glazed Block Wall	**1,257.00**	18
0792	To Attach to Backing Plate Secured in Wall	**816.00**	13

NOTE: Service weight regularly furnished on fittings above.
NOTE: Always specify fixture manufacturer's model name and number.

†REGULARLY FURNISHED

FIG. 0800, 0805 LAVATORY SUPPORTS FLOOR MOUNTED TYPE SUPPORTS WITH SUPPORTING PLATE & HARDWARE

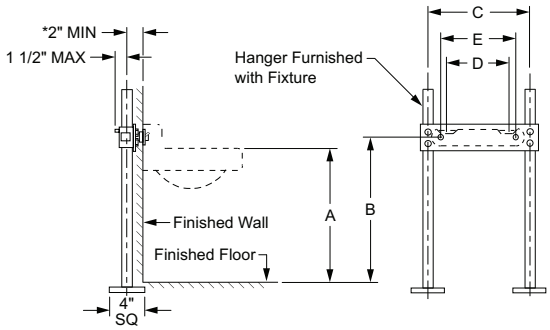

Fig. 0800

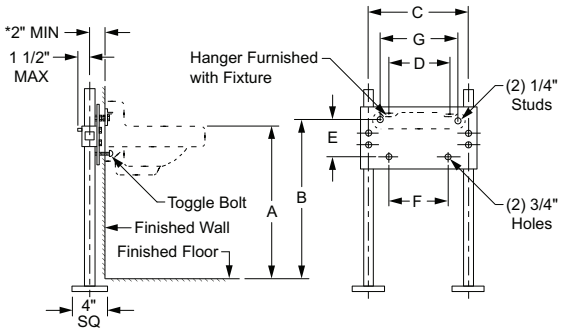

Fig. 0805

*This dimension can be increased when fixture support is to be installed behind the wall (specify when required and wall thickness).

NOTE: For metal stud wall construction, specify Suffix -M31 rectangular steel upright with welded base for greater strength.

For lettered dimensions contact factory.

FIGURE NO.	DESCRIPTION	PRICE	APPROX. WT. LBS.
0800	With Bar Hanger	**966.00**	26
0805	With Bar Hanger & Bottom Securing Lugs	**POA**	17

FOR INFORMATION ON POA ITEMS, PLEASE CONTACT YOUR LOCAL JAY R. SMITH REPRESENTATIVE

FIG. 0801, 0801D LABOR SAVER® LAVATORY SUPPORTS FLOOR MOUNTED TYPE SUPPORTS WITH SUPPORTING PLATE & HARDWARE

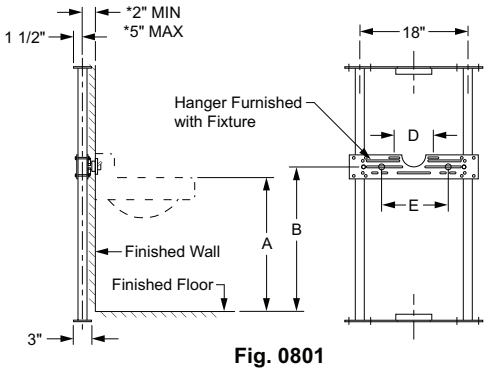

Fig. 0801

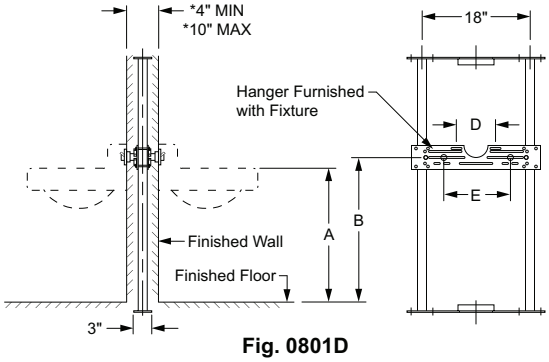

Fig. 0801D

*This dimension can be increased when fixture support is to be installed behind the wall (specify when required and wall thickness).

For lettered dimensions contact factory.

FIGURE NO.	DESCRIPTION	PRICE	APPROX. WT. LBS.
0801	Single–With Bar Hanger	**1,255.00**	26
0801D	Double–With Bar Hanger	**1,666.00**	35

NOTE: Service weight regularly furnished on fittings above.
NOTE: Always specify fixture manufacturer's model name and number.

†REGULARLY FURNISHED

FIXTURE SUPPORTS

FIG. 0823, 0824, 0830, 0834, 0844 LAVATORY & DRINKING FOUNTAIN SUPPORTS FLOOR MOUNTED TYPE WITH SUPPORTING PLATE AND STUDS

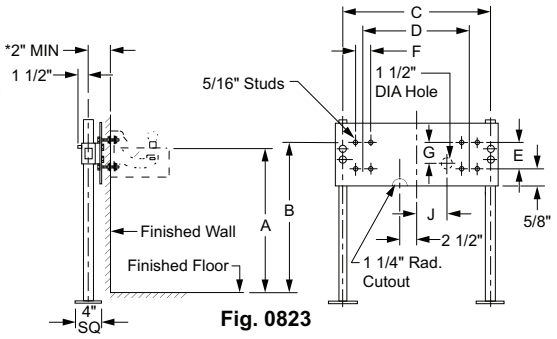

Fig. 0823

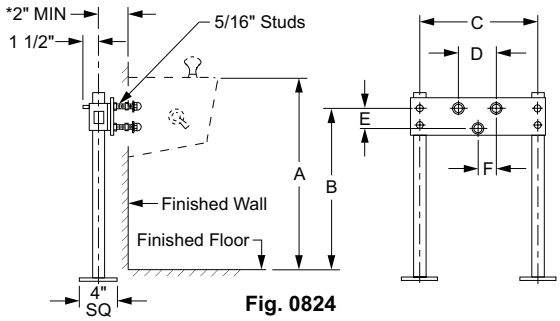

Fig. 0824

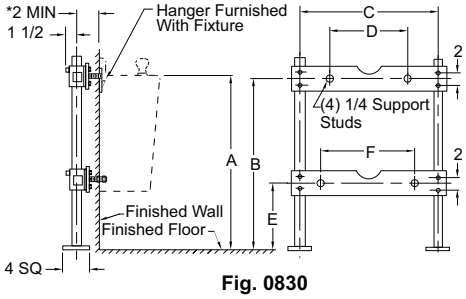

Fig. 0830

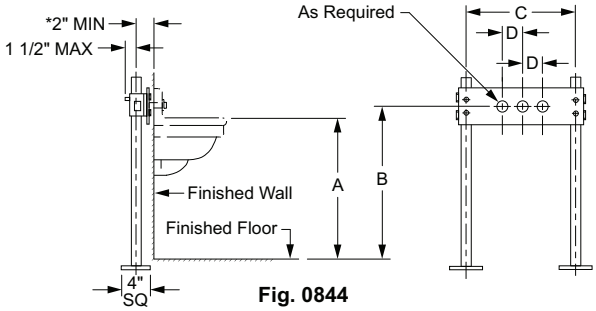

Fig. 0844

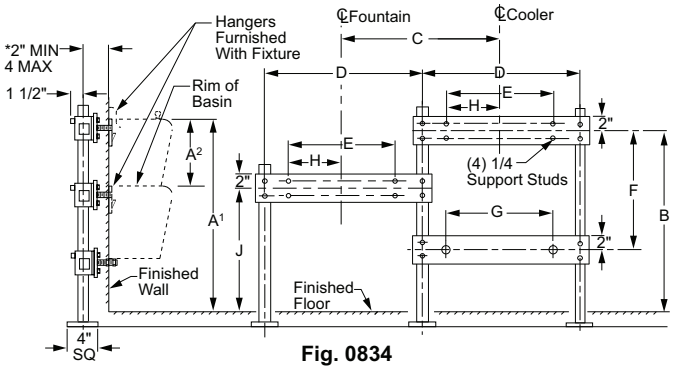

Fig. 0834

*This dimension can be increased when fixture support is to be installed behind the wall (specify when required and wall thickness).

NOTE: For metal stud wall construction, specify Suffix -M31 rectangular steel upright with welded base for greater strength. (0823, 0824, 0830 & 0844 only)

For lettered dimensions contact factory.

FIGURE NO.	DESCRIPTION	PRICE	APPROX. WT. LBS.
0823	For Multiple Drinking Fountains with Wall Brackets	**POA**	19
0824	For Small Drinking Fountains with Integral Hangers	**POA**	20
0830	For Electric Water Coolers	**1,078.00**	32
0834	For Electric Water Coolers	**POA**	32
0844	For High Back Institutional Type Lavatories	**973.00**	32

FIG. 0825, 0826, 0827, 0828 LAVATORY & DRINKING FOUNTAIN SUPPORTS WALL MOUNTED TYPE WITH SUPPORTING PLATE AND STUDS

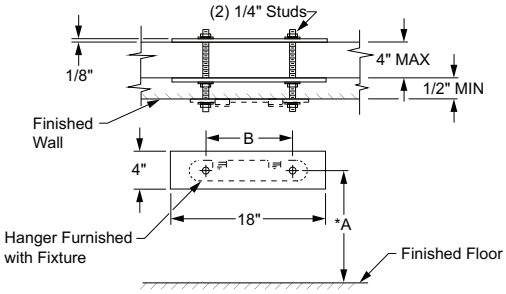

Fig. 0825

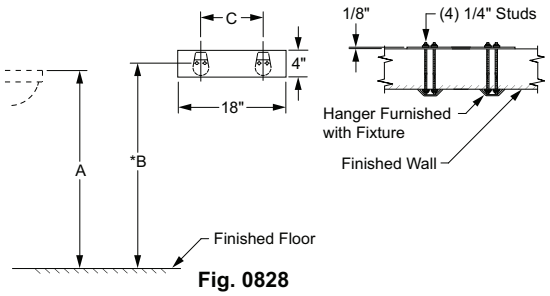

Fig. 0828

FIGURE NO.	DESCRIPTION	PRICE	APPROX. WT. LBS.
0825	For High Back Lavatories with Double Reinforced Plates	**325.00**	13
0826	For High Back Lavatories with Single Reinforced Plates	**267.00**	13
0827	For Washdown Urinals with Double Reinforced Plates	**301.00**	15
0828	For Washdown Urinals with Single Reinforced Plates	**267.00**	13

***NOTE:** This dimension is based on a rim to finish floor height of 31".

For lettered dimensions contact factory.

NOTE: Service weight regularly furnished on fittings above.
NOTE: Always specify fixture manufacturer's model name and number.

FOR INFORMATION ON POA ITEMS, PLEASE CONTACT YOUR LOCAL JAY R. SMITH REPRESENTATIVE

†REGULARLY FURNISHED

FIG. 0831 LABOR SAVER® LAVATORY AND SINK SUPPORTS WITH SUPPORTING PLATE AND STUDS

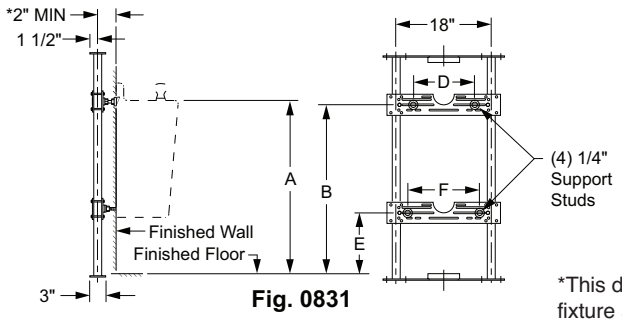

Fig. 0831

*This dimension can be increased when fixture support is to be installed behind the wall (specify when required and wall thickness).

For lettered dimensions contact factory.

FIGURE NO.	DESCRIPTION	PRICE	APPROX. WT. LBS.
0831	For Electric Water Coolers	**1,399.00**	32

FIG. 0870, 0870D HEAVY DUTY SINK SUPPORTS WITH ARC EXPOSED ARMS FLOOR MOUNTED TYPE

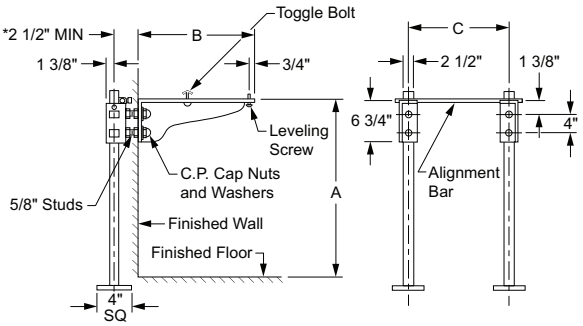

Fig. 0870

*This dimension can be increased when fixture support is to be installed behind the wall (specify when required and wall thickness).

NOTE: For metal stud wall construction, specify Suffix -M31 rectangular steel upright with welded base for greater strength.

For lettered dimensions contact factory.

FIGURE NO.	DESCRIPTION	PRICE	APPROX. WT. LBS.
0870	For Kitchen & Service Sinks-Single Support	**2,026.00**	42
0870D	For Kitchen & Service Sinks-Back to Back Support	**3,266.00**	70

FIG. 0871, 0871D, 0876 HEAVY DUTY SINK SUPPORTS WITH ARC EXPOSED ARMS FOR SINKS WITH CAST LUGS

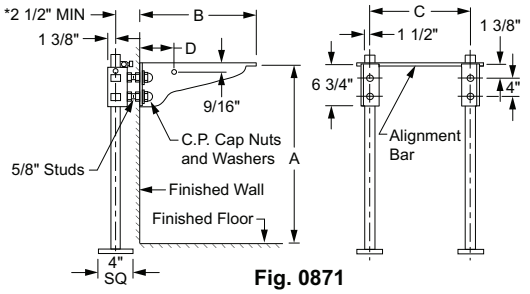

Fig. 0871

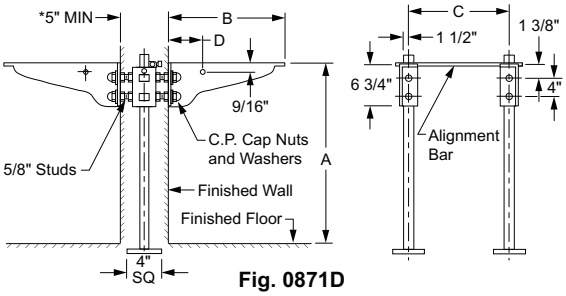

Fig. 0871D

*This dimension can be increased when fixture support is to be installed behind the wall (specify when required and wall thickness).

NOTE: For metal stud wall construction, specify Suffix -M31 rectangular steel upright with welded base for greater strength.

NOTE: For extra heavy duty support with 1 1/2" pipe uprights, add Suffix "X" to Fig. No.

For lettered dimensions contact factory.

FIGURE NO.	DESCRIPTION	PRICE	APPROX. WT. LBS.
0871	For Enamel Iron Service Sinks-Single Support	**2,026.00**	23
0871D	For Enamel Iron Service Sinks-Back to Back Support	**3,266.00**	30
0876	For Perineal Bath	**3,026.00**	62

†REGULARLY FURNISHED

FIXTURE SUPPORTS

FIG. 0913, 0914, 0915, SERIES HEAVY DUTY SUPPORTS FOR SURGICAL SCRUB-UP AND FLUSHING RIM SINKS FLOOR MOUNTED TYPE

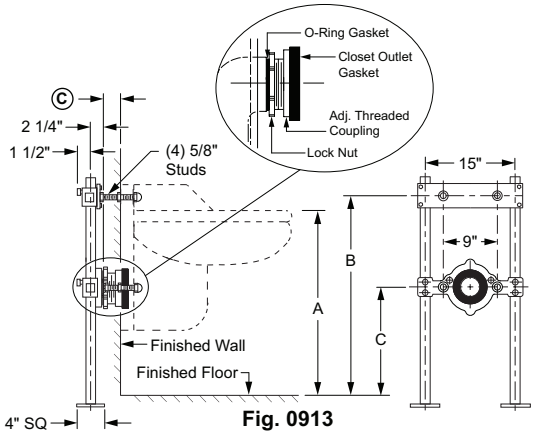

Fig. 0913
SIDE VIEW

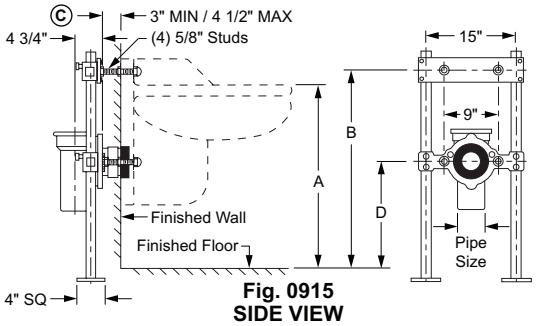

Fig. 0915
SIDE VIEW

© This dimension can be increased when fixture support is to be installed behind the wall (specify when required and wall thickness).

For lettered dimensions contact factory.

FIGURE NO.	DESCRIPTION	PRICE	APPROX. WT. LBS.
0913	With Supporting Studs & Adjustable Coupling for 3" Back Outlet	**1,537.00**	49
0914	With Supporting Studs & Adjustable Coupling for 4" Back Outlet	**1,537.00**	48
0915	4" Caulk Fitting with 4" Vent	**2,548.00**	60
0915-1	4" Caulk Fitting with 2" Vent	**2,548.00**	64
0915-Y2	3" No-Hub Fitting with 2" Vent	**2,186.00**	55
0915-Y3	3" No-Hub Fitting with 3" Vent	**2,186.00**	57
0915-Y4	4" No-Hub Fitting with 2" Vent	**2,548.00**	58
0915-Y5	4" No-Hub Fitting with 4" Vent	**2,548.00**	58

The water closet gasket regularly furnished is made of molded neoprene and designed to fit water closet outlet dimensions and configurations shown in ANSI Standard A112.19.2M, Figure 13B. If gasket is not found to be compatible to fixture due to nonconformance of said fixture to ANSI A112.19.2M, then fixture manufacturer shall be consulted for a suitable gasket recommendation. Jay R. Smith assumes no liability for connections to fixtures which do not conform to these standards.

FIG. 0923, 0924, 0925, SERIES LABOR SAVER® HEAVY DUTY SUPPORTS FOR SURGICAL SCRUB-UP AND FLUSHING RIM SINKS FLOOR MOUNTED TYPE

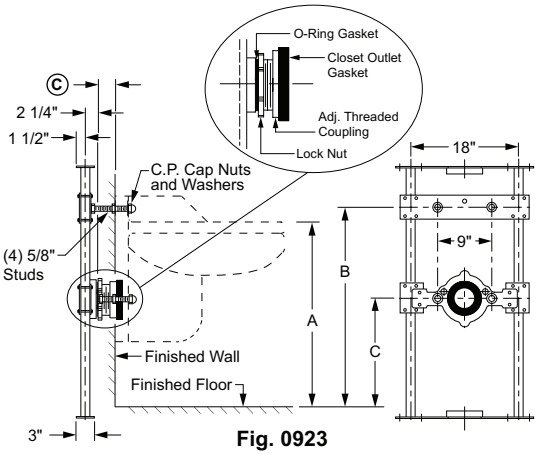

Fig. 0923
SIDE VIEW

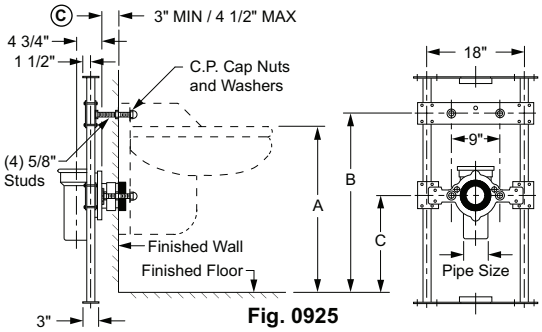

Fig. 0925
SIDE VIEW

© This dimension can be increased when fixture support is to be installed behind the wall (specify when required and wall thickness).

For lettered dimensions contact factory.

FIGURE NO.	DESCRIPTION	PRICE	APPROX. WT. LBS.
0923	With Supporting Studs & Adjustable Coupling for 3" Back Outlet	**2,003.00**	49
0924	With Supporting Studs & Adjustable Coupling for 4" Back Outlet	**2,003.00**	48
0925	4" Caulk Fitting with 4" Vent	**3,315.00**	60
0925-1	4" Caulk Fitting with 2" Vent	**3,315.00**	64
0925Y2	3" No-Hub Fitting with 2" Vent	**2,855.00**	55
0925Y3	3" No-Hub Fitting with 3" Vent	**2,855.00**	57
0925Y4	4" No-Hub Fitting with 2" Vent	**3,315.00**	58
0925Y5	4" No-Hub Fitting with 4" Vent	**3,315.00**	58

The water closet gasket regularly furnished is made of molded neoprene and designed to fit water closet outlet dimensions and configurations shown in ANSI Standard A112.19.2M, Figure 13B. If gasket is not found to be compatible to fixture due to nonconformance of said fixture to ANSI A112.19.2M, then fixture manufacturer shall be consulted for a suitable gasket recommendation. Jay R. Smith assumes no liability for connections to fixtures which do not conform to these standards.

NOTE: Service weight regularly furnished on fittings above.
NOTE: Always specify fixture manufacturer's model name and number.

†REGULARLY FURNISHED

VARIATIONS FOR LAVATORY AND SINK SUPPORTS

SUFFIX NO	TYPE OF VARIATION DESCRIPTION	Approx. Wt Lbs.	ADD FOR SINGLE	ADD FOR DOUBLE
-27	Extended Arms for Handicapped Lavatory	–	86.00	172.00
-E	2" Chrome Plated Bronze Escutcheons (For concealed arm supports only)	1	213.00	426.00
-E4	4" Chrome Plated Bronze Escutcheons (For concealed arm supports only)	1	383.00	766.00
-E6	6" Chrome Plated Escutcheons (For concealed arm supports only)	2	383.00	766.00
-KF	Support Bar for Fixture Mounted Knee Action Valve	1	193.00	386.00
-KW	Support Bar for Wall Mounted Knee Action Valve	1	193.00	386.00
-M11	Floor to Ceiling Uprights	–	POA	POA
-M24	Extension Adaptor For Back of Wall Installations, for each additional inch of **wall thickness** over 4"	–	POA	POA
-M30	Special Offset Exposed Arm Application	–	N/C	N/C
-M31	Heavy Duty 3 X 1" Rectangular Uprights	–	N/C	N/C
-U	Vandal Proof Trim	–	171.00	342.00
-Z	For Narrow Wall Installations	–	N/C	N/C

†REGULARLY FURNISHED

ROOF DRAINS

Fig. 1001

Fig. 1005

Fig. 1010

Fig. DX1010

Fig. 1011

Fig. 1015

Fig. 1017

Fig. 1018

Fig. 1019

Fig. 1020

Fig. 1070

Fig. 1080

Fig. 1083

Fig. 1085

Fig. DX1240

Fig. DX1250

Fig. 1310

Fig. 1320

Fig. 1330

Fig. 1340

Fig. 1409

Fig. 1410

Fig. 1419

Fig. 1420

Fig. 1450

Fig. 1460

Fig. 1470

Fig. 1480

Fig. 1520

Fig. 1530

Fig. 1560

Fig. 1580

Fig. 1605

Fig. 1610

Fig. 1650

Fig. 1690

Fig. 1710

Fig. 1720

Fig. 1730

Fig. 1740

Fig. 1748

Fig. 1750

Fig. 1760

Fig. 1770

Fig. 1771

Fig. 1775

Fig. 1785

Fig. 1787

Fig. 1800

Fig. 1830

Fig. 1850

Fig. 1900 Series

ORDERING GUIDELINES

1000 SERIES

After identifying the proper options required to meet the engineering specification, place order as shown below:

Examples:

1015C04 (-E04-CL-R-U)

Figure No.

Type of Outlet (Caulk)

Pipe Size (Inches)

Extension (4")

"L" Shaped Underdeck Clamp

Sump Receiver

Vandal Proof

*All variation suffixes are to be shown in parenthesis.

Drain Outlet Types:

C Caulk Outlet
T Threaded Outlet
Y NO-HUB Outlet
L Speedi-Set Service Weight (02, 03 & 04" sizes)
LXH Speedi-Set Extra Heavy (02, 03 & 04" sizes only)

Example: Pipe Size (Inches)
02 - 2"
03 - 3"
04 - 4"
etc.

Example: Extensions 3/4" and up
Order as follows:
3/4" -E075
1" -E01
1 1/2" -E015
etc.

Example: Exterior Water Dam
2 1/2" - WD025
3" - WD03
4" - WD04

ROOF DRAIN TECHNICAL DATA

DEFINITION - ORIGIN - USAGE

The modern roof drain is designed to drain off rain water in the most effective manner possible while maintaining an aesthetic appeal because in many instances it is placed in full view of the public.

Through the years, Smith has attempted to satisfy both the artistic eye of the architect and the calculating mind of the engineer, concluding the properly designed roof drain must have the following features:

- Pleasing dome shape with a low profile and adequate free drainage
- Corrosion-resisting dome material
- Effective debris protection
- Overflow drainage to allow drainage during debris build-up
- Gravel stop
- Positive Flashing Clamp
- Page control channels
- Sump designed to minimize air entrapment
- Flexibility to meet all construction requirements

Smith roof drains include all of these features.

TYPICAL SMITH ROOF DRAINS

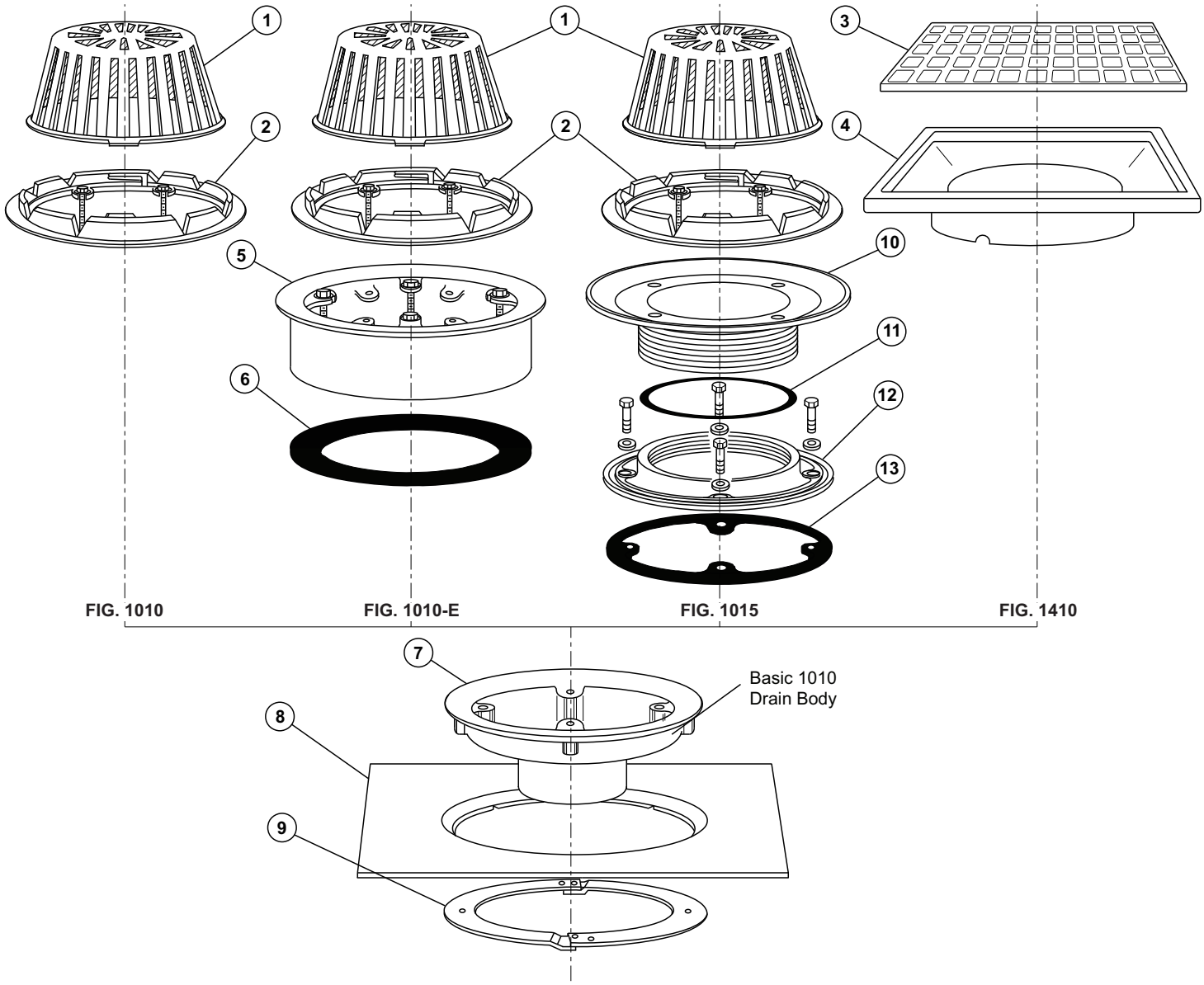

ROOF DRAIN PARTS LIST

NO.	DESCRIPTION	NO.	DESCRIPTION
1	High Density Polyethylene Dome	7	Drain Body
2	Combined Cast Iron Flashing Clamp and Gravel Stop	8	Sump Receiver
3	Secured Square Hole Grate	9	Underdeck Clamp
4	Flashing Clamp for Square Grate	10	Adjustable Extension Sleeve
5	Fixed Extension	11	O-Ring Gasket
6	Fixed Extension Gasket	12	Reversible Collar
		13	Neoprene Gasket

SELECTING A ROOF DRAIN

To select the proper roof drain, the following information must be determined by the designer/specifier.

- Type of roof construction
- Roof pitch
- Maximum volume of expected rainfall and storm design criteria (This information must be obtained from your local weather bureau and/or local code authority)
- Desired rate of drainage
- Safety overflow requirements (Emergency/secondary overflow roof drains are recommended. Local codes vary but it is recommended to provide a 1 to 1 ratio)
- Roof load (The maximum possible rainwater [build-up] load should be determined and provided to the structural engineer for inclusion in the roof structure design)
- Location of drains (Consult your local code requirements)
- Size
- Vandal-proofing
- **NOTE: ALWAYS CONSULT YOUR LOCAL CODE FOR SIZING AND DESIGN CRITERIA WHEN DESIGNING THE ROOF DRAIN SYSTEM. LOCAL CODE REQUIREMENTS TAKE PRECEDENCE OVER CATALOG INFORMATION.**
- **DATA SHOWN IN TABLES 1 AND 2 BELOW ARE TAKEN FROM THE UNIFORM PLUMBING CODE (UPC) - 2006 EDITION.**

SUGGESTED STEPS FOR SELECTING PROPER ROOF DRAIN LEADER SIZES AND NUMBER REQUIRED FOR A GIVEN ROOF

1. Calculate the total roof area.
2. Determine the maximum hourly rainfall in inches. (The figure can be acquired from your local weather bureau and/or local code authority.)
3. Select leader size.
4. From Table 1, determine the number of square feet that can be drained by one roof leader at the local maximum rainfall rate.
5. Divide the total roof area by the area that one leader will handle. The above result is the number of roof drains required for the building. If the result is a fraction less, use the next higher number.

Example: Using a 4" Vertical Leader

1. Total roof area - 500' by 200' = 100,000 sq. ft.
2. Determine rate of rainfall - for this example use 4".
3. After studying building plan and physical arrangement, assume that 4" leaders are required for this project.
4. From Table 1 - one 4" leader at 4" rate of rainfall will take care of 3,460 sq. ft. of roof area.
5. Number of roof leaders required is 29 (100,000 sq. ft. divided by 3,460 sq. ft.), Therefore 29 roof drains would be required.

Example: Using a 6" Vertical Leader

1. Total roof area - 500' by 200' = 100,000 sq. ft.
2. Determine rate of rainfall - for this example use 4".
3. After studying building plan and physical arrangement, assume that 6" leaders are required for this project.
4. From Table 1 - one 6" leader at 4" rate of rainfall will take care of 10,200 sq. ft. of roof area.
5. Number of roof leaders required is 10 (100,000 sq. ft. divided by 10,200 sq. ft.), Therefore 10 roof drains would be required.

TABLE 1
ROOF DRAIN VERTICAL LEADER REQUIREMENTS FOR HORIZONTAL ROOF AREAS AT VARIOUS RAINFALL RATES

Leaders [2] [4] Pipe Size Inches	Size Open Area SQ. In.	Maximum Allowable Horizontal Projected Roof Area Square Feet at Various Rainfall Rates [1]					
		1 IN./HR.	2 IN./HR.	3 IN./HR.	4 IN./HR.	5 IN./HR.	6 IN./HR.
02	3.14	2,176	1,088	725	544	435	363
03	7.06	6,440	3,220	2,147	1,610	1,288	1,073
04	12.56	13,840	6,920	4,613	3,460	2,768	2,307
05	19.60	25,120	12,560	8,373	6,280	5,024	4,187
06	28.30	40,800	20,400	13,600	10,200	8,160	6,800
08	50.25	88,000	44,000	29,333	22,000	17,600	14,667

TABLE 1 IS BASED ON TABLE 11-1 FROM THE UNIFORM PLUMBING CODE (UPC) - 2006 EDITION

[1] For rainfall rates other than those listed, determine the allowable roof area by dividing the area given in the 1 in./hr. column by the desired rainfall rate.

TABLE 2
ALLOWABLE FLOW FOR VERTICAL LEADERS AND HORIZONTAL STORM DRAINS
ALLOWABLE FLOW IN G.P.M. [2] [3]

PIPE SIZE	[2] [4] VERTICAL LEADER	HORIZONTAL STORM DRAIN SLOPE PER FOOT		
		1/8"[3]	1/4"[3]	1/2"[3]
02	23	10	15	20
03	67	34	48	68
04	144	78	110	156
05	261	139	196	278
06	424	222	314	445
08	913	478	677	956
10	—	860	1214	1721
12	—	1384	1953	2768
15	—	2473	3491	4946

TABLE 2 IS BASED ON TABLE 11-2 FROM THE UNIFORM PLUMBING CODE (UPC) - 2006 EDITION.

[2] The sizing data for vertical conductors, leaders, and drains are based on the pipes flowing 7/24 full. Head of water over drain will determine exact flow rates.

[3] The sizing for the horizontal piping is based on the pipes flowing full.

[4] To avoid severe hydraulic jump and/or backpressure, good engineering practice requires the vertical leader transition into a larger size horizontal storm drain per the GPM flow indicated in Table 2 for 1/8" and 1/4" sloped storm drains.

STEPS FOR CALCULATING DRAINAGE REQUIREMENTS FOR ABOVE EXAMPLE USING G.P.M.

1. Use the following formula to determine G.P.M.:
   G.P.M. = .0104 x R x A
   G.P.M. = Gallons per minute
   R = Rainfall intensity - inches/hour
   A = Roof area - square feet
   .0104 = Conversion factor - G.P.M./sq. ft. for 1" (one) inch/hr. rainfall

2. **Example:**
   A. 4" rainfall inches/hr.
   B. 100,000 sq. ft. roof area
   C. G.P.M. = .0104 x 4" x 100,000 sq. ft. = 4,160 G.P.M.

3. Refer to table 2: a 4" leader [2] will handle 144 G.P.M.
   4,160 G.P.M/ ÷ 144 = (28.8) 29 - 4" vertical leaders required.

   Refer to Table 2: a 6" leader [2] will handle 424 G.P.M.
   4, 160 G.P.M. ÷ 424 = (9.8) 10 - 6" vertical leaders required.

FIG. 1001 UNIVERSAL REPLACEMENT DOME AND COLLAR ASSEMBLY

FUNCTION: Universal cast iron membrane clamping collar and dome are designed for retrofit roof applications where the existing main roof drain body is to remain in place and continue to be operative. The bolting lugs of this collar match the bolt pattern of the majority of the common roof drain bodies and generally conform to the surface angles of the flange. This allows easy replacement along with adequate pressure on the membrane to insure water tightness. The collar is designed to accompany most 15" and 16" diameter roof drain bodies with bolt circles ranging 7 1/4" to 10 3/4" in diameter. It is recommended to extend roof membrane into the sump of existing roof drain body.

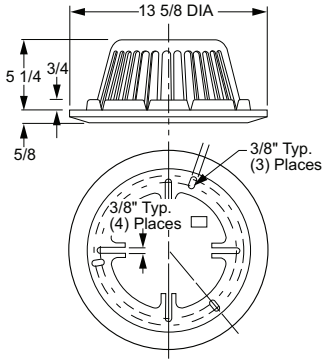

OPTIONS:		ADD
-AD	Aluminum Dome	POA
-CID	Cast Iron Dome	POA
-CID8	8" High Cast Iron Dome	POA
-CIDG	Galvanized Cast Iron Dome (add to -CID)	POA
-G	Galvanized Collar	POA
-LD	Less Dome	(Specify Fig. 1002)
	Perforated Stainless Steel Gravel Guard (Specify Height)	POA
-RBD	Rough Bronze Dome	POA
-SSM	Stainless Steel Mesh Covered Dome (Specify Dome)	POA
	Solid Water Dam Collar (Specify Height)	POA
-U	Vandal Proof	POA

COLLAR DIA.	FREE AREA SQ IN	†DUCO CI COLLAR POLY DOME	APPROX. WEIGHT LBS
13 5/8"	102.5	POA	14.72

REGULARLY FURNISHED: Polyethylene "Twist Lock" Dome and Duco Coated Universal Cast Iron Membrane Clamping Collar with Mounting Hardware.

FIG. 1005 SIPHONIC ROOF DRAIN 15 1/4" DIAMETER - LOW PROFILE DOME

FUNCTION: For use in engineered siphonic roof drainage system. May be used in flat roof of any construction. Large low profile dome provides sufficient free area for quick drainage of rain water and protects the drain sump, baffle and connected piping from the intrusion of debris. Internal air baffle creates siphonic drainage action producing more efficient drainage than traditional roof drains.

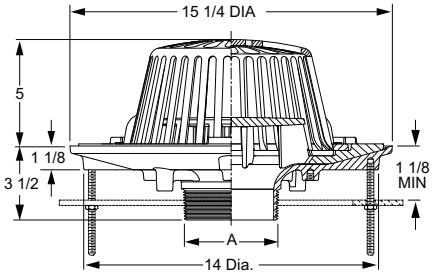

A OUTLET SIZE	FLANGE DIA.	FREE AREA SQ IN	†DUCO CI POLY DOME	APPROX. WEIGHT LBS
02, *0250"	15 1/4"	102.5	POA	39
03, 04"	15 1/4"	102.5	POA	39

REGULARLY FURNISHED: Duco Cast Iron Body, Flashing Clamp, Air Baffle and Polyethylene Dome.

OUTLET VARIATIONS (Specify type of outlet and pipe size in inches.)

Outlet Type	Outlet Designation Outlet Type/Pipe Size	Body HT. DIM.	ADD
Male Threaded Outlet	T02, *T0250, T03, T04	3 1/2"	POA
No-Hub	Y02, Y03, Y04	3 1/2"	POA

*2 1/2" pipe size only available with male threaded outlet

OPTIONS:		ADD
-AD	Aluminum Dome	POA
-C	Underdeck Clamp	POA
-C10	Underdeck Clamp for 10" Deck Opening	POA
-CID	CI Dome	POA
-CIDG	Galv. Cast Iron Dome (add to -CID)	POA
-CL	"L" Shaped Underdeck Clamp	POA
-G	Galvanized CI	POA
-R	Sump Receiver	POA
-RBD	Rough Bronze Dome	POA
-U	Vandal Proof Screws	POA

CONTACT SALES ENGINEERING FOR PROJECT EVALUATION PRIOR TO RECEIVING PRICING.

FIG. 1010DEK TOP MOUNT DRAIN ELEVATOR

FUNCTION: Used to elevate the Figure Numbers 1005, 1010, 1070 and 1080 type roof drains on top side of roof deck to compensate for insulation thickness.

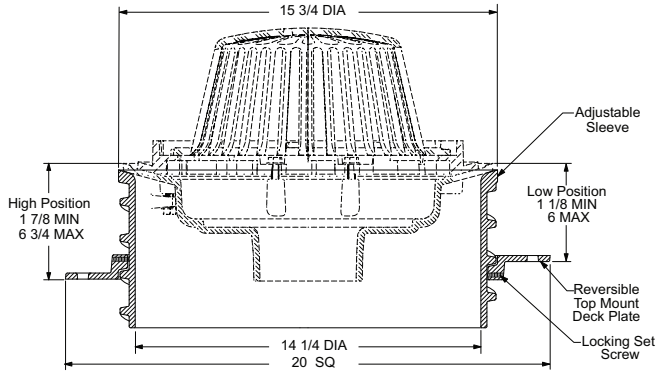

NOTE: 16 1/2 diameter deck opening recommended.

Product Features:
- Elevates Figure Numbers 1005, 1010, 1070 & 1080 type roof drains.
- Adjustable to compensate for insulation thickness.
- Top adjustment at deck for an easier and more secure installation.
- Overall adjustment height of 6 3/4".
- Drain Elevator is outside of the waterway, eliminating leaks.
- The cast thread design provides for a quick adjustment - up or down; full adjustment achieved with one full turn.
- Top mount reversible collar eliminates the need for a conventional extension, underdeck clamp and sump receiver.

OPTIONS:
-G Galvanized CI

REGULARLY FURNISHED: Duco Coated Cast Iron Adjustable Sleeve and Top Mount Reversible Deck Plate.

CONTACT SALES ENGINEERING FOR PROJECT EVALUATION PRIOR TO RECEIVING PRICING.

FIG. 1010 16" DIAMETER - LOW PROFILE DOME

FUNCTION: Used in flat roof of any construction. Large low profile dome provides sufficient free area for quick drainage of rain water and protects the drain sump and connected piping from the intrusion of debris. Wide clamping surface holds flashing and roofing materials without puncturing.

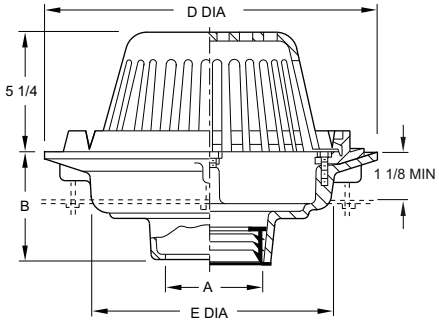

A OUTLET SIZE	D FLANGE DIA.	E DIA.	FREE AREA SQ IN	†DUCO CI POLY DOME	DUCO CI W/ ALUM DOME	APPROX. WEIGHT LBS
02, 03, 04"	15 1/4"	11"	102.5	**908.00**	**1,222.00**	28
05, 06"	15 1/4"	11"	102.5	**1,299.00**	**1,613.00**	28
08"	16"	12 1/2"	102.5	**1,688.00**	**2,002.00**	30

A OUTLET SIZE	D FLANGE DIA.	E DIA.	FREE AREA SQ IN	**†DUCO CI CI DOME	DUCO CI W/ ALUM DOME	APPROX. WEIGHT LBS
08"	20"	16"	228	**2,421.00**	**3,173.00**	60
10"	16"	12 1/2"	122.5	**2,668.00**	**3,358.00**	62
10"	20"	16"	228	**2,764.00**	**3,516.00**	63
12"	20"	16"	228	**2,857.00**	**3,609.00**	65

Add $458.00** to Galvanize the Cast Iron Dome.

REGULARLY FURNISHED: Duco Cast Iron Body with Combined Flashing Clamp and Gravel Stop with Dome.

OUTLET VARIATIONS (Specify type of outlet and pipe size in inches.)

Outlet Type	Outlet Designation Outlet Type/Pipe Size	"B" Body HT. DIM.	ADD
Inside Caulk	C02, C03, C04, C05, C06	5"	**N/C**
	C08, C10	*6"	**N/C**
Speedi-Set SW	L02, L03, L04	5"	**N/C**
Speedi-Set XH	LXH02, LXH03, LXH04	5"	**N/C**
Threaded	T02, T03, T04, T05, T06	3 3/4"	**99.00**
	T08, T10	*5"	**99.00**
No-Hub	Y02, Y03, Y04, Y05, Y06	5"	**N/C**
	Y08, Y10	*6"	**N/C**
	Y12	7 3/4"	**N/C**

*This dimension is for 16" dia. flange size body. For 20" flange size body dimension is 7 3/4".

OPTIONS:		ADD
-AA	Aluminum Body (2-6" only)	**POA**
-B	Bucket	**327.00**
-C	Aluminum Underdeck Clamp (15 & 16" Flange Bodies)	**310.00**
-C	Cast Iron Underdeck Clamp (20" Flange Bodies)	**616.00**
-C2	Secondary Flashing Clamp (Requires Extension)	**238.00**
-CID	CI Dome (when not reg. furn.)	**271.00**
-CIDG	Cast Iron Dome **with** Galvanizing	**730.00**
-CID8	8" High CI Dome	**589.00**
-CL	Angular Underdeck Clamp	**626.00**
-DE	Deck Elevator Extension (Deck Elevator Kit)	**1,325.00**
-DID	Drain Installation Device 2-6"	**458.00**
-E	Extension up to 4"	**849.00**
	per inch over 4"	**202.00**
-G	Galvanized CI	**1,229.00**
-GRT	CI Grate in lieu of Dome (16" Flange Bodies)	**886.00**
-PDSSM	SS Mesh on Poly Dome	**642.00**
-R	Sump Receiver (15 & 16" Flange Bodies)	**345.00**
-R	Sump Receiver (20" Flange Bodies)	**690.00**
-RBD	Rough Brz Dome	**1,063.00**
-RDP	Roof Deck Plate (15 & 16" Flange)	**556.00**
-RDP	Roof Deck Plate (20" Flange)	**994.00**
-SSM	SS Mesh on Metal Dome (Specify dome)	**642.00**
-U	Vandal Proof Dome	**158.00**

FIG. DX1010 WIDE FLANGE BODY - SECURED DOME

FUNCTION: For use in promenade roof deck and rooftop recreational areas where traffic bearing roof deck covering is to be applied. Drain body sump is protected from leaves, paper and other debris by large secured dome.

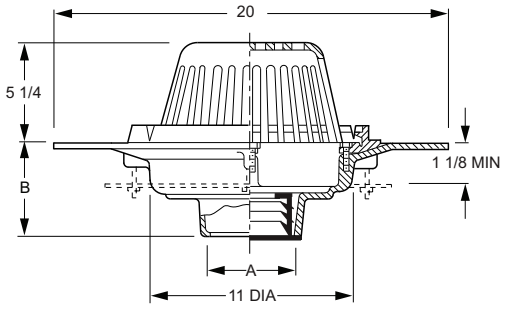

A OUTLET SIZE	FLANGE DIA.	FREE AREA SQ IN	†DUCO CI POLY DOME	APPROX. WEIGHT LBS
02, 03, 04"	20"	102.5	**2,604.00**	50
05, 06"	20"	102.5	**2,989.00**	50

REGULARLY FURNISHED: Duco Cast Iron Wide Flange Body with Combined Flashing Clamp and Gravel Stop with Polyethylene Dome.

OUTLET VARIATIONS (Specify type of outlet and pipe size in inches.)

Outlet Type	Outlet Designation Outlet Type/Pipe Size	"B" Body HT. DIM.	ADD
Inside Caulk	C02, C03, C04, C05, C06	5"	**N/C**
Speedi-Set SW	L02, L03, L04	5"	**N/C**
Speedi-Set XH	LXH02, LXH03, LXH04	5"	**N/C**
Threaded	T02, T03, T04, T05, T06	3 3/4"	**99.00**
No-Hub	Y02, Y03, Y04, Y05, Y06	5"	**N/C**

OPTIONS:		ADD
-AD	Aluminum Dome	**314.00**
-C	Aluminum Underdeck Clamp	**310.00**
-CID	CI Dome	**271.00**
-CIDG	Cast Iron Dome **with** Galvanizing	**730.00**
-CID8	8" High CI Dome	**589.00**
-CL	Angular Underdeck Clamp	**626.00**
-G	Galvanized CI	**1,603.00**
-PDSSM	SS Mesh on Poly Dome	**642.00**
-RBD	Rough Bronze Dome	**1,063.00**
-SH	Securing Holes	**156.00**
-SSM	SS Mesh on Metal Dome	**642.00**
-U	Vandal Proof Dome	**158.00**

†REGULARLY FURNISHED

FIG. 1011 IRMA ROOF APPLICATIONS

FUNCTION: Used in roof systems where the insulated membrane assembly method of waterproofing is provided. Fig. 1011 is used where built-up felt and asphalt waterproofing is installed. A 4" high perforated stainless steel gravel stop is supplied to retain the crushed gravel used in IRMA flat roof construction.

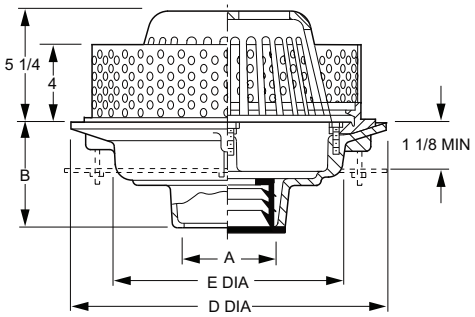

A OUTLET SIZE	D FLANGE DIA.	E DIA.	FREE AREA SQ IN	†DUCO CI POLY DOME	DUCO CI W/ ALUM DOME	APPROX. WEIGHT LBS
02, 03, 04"	15 1/4"	11"	102.5	**1,921.00**	**2,235.00**	28
05, 06"	15 1/4"	11"	102.5	**2,303.00**	**2,617.00**	28

A OUTLET SIZE	D FLANGE DIA.	E DIA.	FREE AREA SQ IN	**†DUCO CI CI DOME	DUCO CI W/ ALUM DOME	APPROX. WEIGHT LBS
08"	20"	16"	228	**3,428.00**	**4,180.00**	60
10"	20"	16"	228	**3,774.00**	**4,526.00**	60

Add $458.00** to Galvanize the Cast Iron Dome.

REGULARLY FURNISHED: Duco Cast Iron Body with Flashing Clamp, 1/16" Thick, 4" High Stainless Steel Perforated Gravel Stop with 3/8" Dia. Openings and Dome.

OUTLET VARIATIONS (Specify type of outlet and pipe size in inches.)

Outlet Type	Outlet Designation Outlet Type/Pipe Size	"B" Body HT. DIM.	ADD
Inside Caulk	C02, C03, C04, C05, C06	5"	N/C
	C08, C10	7 3/4"	N/C
Speedi-Set SW	L02, L03, L04	5"	N/C
Speedi-Set XH	LXH02, LXH03, LXH04	5"	N/C
Threaded	T02, T03, T04, T05, T06	3 3/4"	99.00
	T08, T10	7 3/4"	99.00
No-Hub	Y02, Y03, Y04, Y05, Y06	5"	N/C
	Y08, Y10	7 3/4"	N/C

OPTIONS:		ADD
-AA	Aluminum Body	POA
-C	Aluminum Underdeck Clamp (15 & 16" Flange Bodies)	310.00
-C	Cast Iron Underdeck Clamp (20" Flange Bodies)	616.00
-CID	CI Dome (when not reg. furn.)	271.00
-CIDG	Cast Iron Dome **with** Galvanizing	730.00
-CID8	8" High CI Dome	589.00
-CL	Angular Underdeck Clamp	626.00
-DE	Deck Elevation Extension (Deck Elevator Kit)	1,325.00
-G	Galvanized CI	1,229.00
-GG	Perf SS Gravel Stop over 4", per inch	98.00
-PDSSM	SS Mesh on Poly Dome	642.00
-R	Sump Receiver	345.00
-R	Sump Receiver (20" Flange Bodies)	690.00
-RBD	Rough Bronze Dome	1,063.00
-RDP	Roof Deck Plate (15 & 16" Flange Bodies)	556.00
-RDP	Roof Deck Plate (20" Flange Bodies)	994.00
-SSM	SS Mesh on Metal Dome	642.00
-U	Vandal Proof Dome	158.00

FIG. 1015 ROOF DRAIN WITH ADJUSTABLE EXTENSION

FUNCTION: Used in flat roofs of any construction. The adjustable extension sleeve permits adjustment from a minimum of 1 1/4" to a maximum of 4", easily accommodating up to 2 3/4" of varying insulation thicknesses. The positive threading allows smooth perimeter movement and circumferential support of the top at any adjusted elevation. Large low profile dome provides sufficient free area for quick drainage of rainwater and protection against debris.

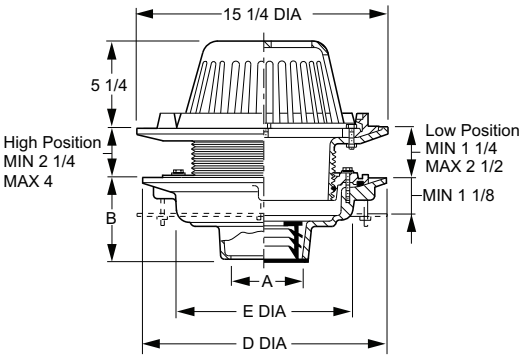

A OUTLET SIZE	D FLANGE DIA.	E DIA.	FREE AREA SQ IN	†DUCO CI POLY DOME	APPROX. WEIGHT LBS
02, 03, 04"	15 1/4"	11"	102.5	**1,814.00**	54
05, 06"	15 1/4"	11"	102.5	**2,205.00**	54
08"	16"	12 1/2"	102.5	**2,598.00**	58

REGULARLY FURNISHED: Duco Cast Iron Body with Adjustable Extension Sleeve, Reversible Collar, Combined Flashing Clamp and Gravel Stop, with Polyethylene Dome.

OUTLET VARIATIONS (Specify type of outlet and pipe size in inches.)

Outlet Type	Outlet Designation Outlet Type/Pipe Size	"B" Body HT. DIM.	ADD
Inside Caulk	C02, C03, C04, C05, C06	5"	N/C
	C08	6"	N/C
Speedi-Set SW	L02, L03, L04	5"	N/C
Speedi-Set XH	LXH02, LXH03, LXH04	5"	N/C
Threaded	T02, T03, T04, T05, T06	3 3/4"	99.00
	T08	5"	99.00
No-Hub	Y02, Y03, Y04, Y05, Y06	5"	N/C
	Y08	6"	N/C

OPTIONS:		ADD
-AA	Aluminum Body	POA
-AD	Aluminum Dome	314.00
-C	Aluminum Underdeck Clamp	310.00
-C2	Secondary Flashing Clamp	238.00
-CID	CI Dome	271.00
-CIDG	Cast Iron Dome **with** Galvanizing	730.00
-CID8	8" High CI Dome	589.00
-CL	Angular Underdeck Clamp	626.00
-DE	Deck Elevator Extension (Deck Elevator Kit)	1,325.00
-G	Galvanized CI	1,660.00
-PDSSM	SS Mesh on Poly Dome	642.00
-R	Sump Receiver	345.00
-RBD	Rough Bronze Dome	1,063.00
-RDP	Roof Deck Plate	556.00
-SSM	SS Mesh on Metal Dome	642.00
-U	Vandal Proof Dome	158.00

†REGULARLY FURNISHED

FIG. 1017 IRMA ROOF DRAIN APPLICATIONS

FUNCTION: Used in roof systems where the insulated membrane assembly method of waterproofing is provided. Used where built-up felt and asphalt waterproofing is installed. A stainless steel extension gravel stop at height specified is supplied to retain the crushed gravel used in IRMA flat roof construction.

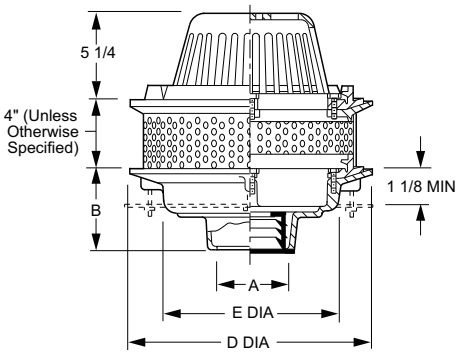

A OUTLET SIZE	D FLANGE DIA.	E DIA.	FREE AREA SQ IN	†DUCO CI POLY DOME	APPROX. WEIGHT LBS
02, 03, 04"	15 1/4"	11"	102.5	**1,921.00**	40
05, 06"	15 1/4"	11"	102.5	**2,303.00**	42
08"	16"	12 1/2"	102.5	**2,697.00**	45

REGULARLY FURNISHED: Duco Cast Iron Body with Flashing Clamp, Perforated Stainless Steel Extension, Gravel Stop and Polyethylene Dome.

OUTLET VARIATIONS (Specify type of outlet and pipe size in inches.)

Outlet Type	Outlet Designation Outlet Type/Pipe Size	"B" Body HT. DIM.	ADD
Inside Caulk	C02, C03, C04, C05, C06	5"	**N/C**
	C08	6"	**N/C**
Speedi-Set SW	L02, L03, L04	5"	**N/C**
Speedi-Set XH	LXH02, LXH03, LXH04	5"	**N/C**
Threaded	T02, T03, T04, T05, T06	3 3/4"	**99.00**
	T08	5"	**99.00**
No-Hub	Y02, Y03, Y04, Y05, Y06	5"	**N/C**
	Y08	6"	**N/C**

OPTIONS:		ADD
-AD	Aluminum Dome	**314.00**
-C	Aluminum Underdeck Clamp	**310.00**
-CID	CI Dome	**271.00**
-CIDG	Cast Iron Dome **with** Galvanizing	**730.00**
-CID8	8" High CI Dome	**589.00**
-CL	Angular Underdeck Clamp	**626.00**
-DE	Deck Elevator Extension (Deck Elevator Kit)	**1,325.00**
-G	Galvanized CI	**1,229.00**
-E	Perf SS Extension over 4", per inch	**98.00**
-R	Sump Receiver	**345.00**
-RBD	Rough Bronze Dome	**1,063.00**
-SSM	SS Mesh on Metal Dome	**642.00**
-U	Vandal Proof Dome	**158.00**

FIG. 1018 IRMA ROOF APPLICATIONS

FUNCTION: Used in roof systems where the insulated membrane assembly method of waterproofing is provided. Used where a liquid membrane waterproofing is installed. A stainless steel extension gravel stop at height specified is supplied to retain the crushed gravel used in IRMA flat roof construction.

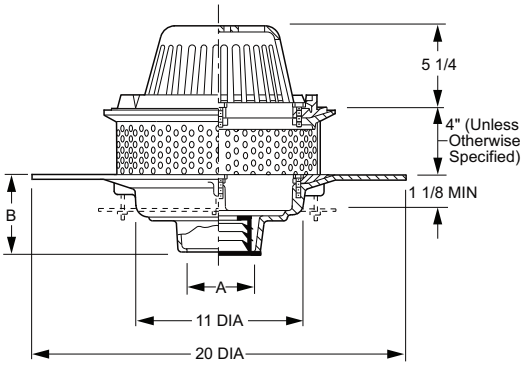

A OUTLET SIZE	FLANGE DIA.	FREE AREA SQ IN	†DUCO CI POLY DOME	APPROX. WEIGHT LBS
02, 03, 04"	20"	102.5	**3,612.00**	36
05, 06"	20"	102.5	**4,001.00**	47

REGULARLY FURNISHED: Duco Cast Iron Wide Flange Body with Flashing Clamp, Perforated Stainless Steel Extension, Gravel Stop and Polyethylene Dome.

OUTLET VARIATIONS (Specify type of outlet and pipe size in inches.)

Outlet Type	Outlet Designation Outlet Type/Pipe Size	"B" Body HT. DIM.	ADD
Inside Caulk	C02, C03, C04, C05, C06	5"	**N/C**
Speedi-Set SW	L02, L03, L04	5"	**N/C**
Speedi-Set XH	LXH02, LXH03, LXH04	5"	**N/C**
Threaded	T02, T03, T04, T05, T06	3 3/4"	**99.00**
No-Hub	Y02, Y03, Y04, Y05, Y06	5"	**N/C**

OPTIONS:		ADD
-AD	Aluminum Dome	**314.00**
-C	Aluminum Underdeck Clamp	**310.00**
-CID	CI Dome	**271.00**
-CIDG	Cast Iron Dome **with** Galvanizing	**730.00**
-CID8	8" High CI Dome	**589.00**
-CL	Angular Underdeck Clamp	**626.00**
-G	Galvanized CI	**1,603.00**
-E	Perf SS Extension over 4", per inch	**98.00**
-RBD	Rough Bronze Dome	**1,063.00**
-SSM	SS Mesh on Metal Dome	**642.00**
-U	Vandal Proof Dome	**158.00**

†REGULARLY FURNISHED

FIG. 1019 IRMA ROOF APPLICATIONS

FUNCTION: Used in roof systems where the insulated membrane assembly method of waterproofing is provided. Fig. 1019 is utilized with a liquid membrane waterproofing. A 4" high perforated stainless steel gravel stop is supplied to retain the crushed gravel used in IRMA flat roof construction.

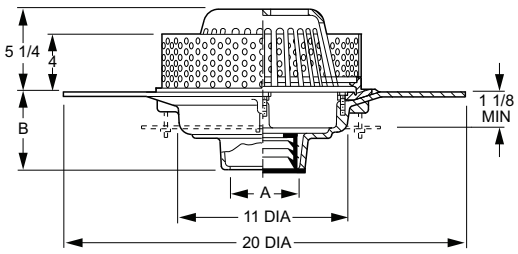

A OUTLET SIZE	FLANGE DIA.	FREE AREA SQ IN	†DUCO CI POLY DOME	APPROX. WEIGHT LBS
02, 03, 04"	20"	102.5	**3,612.00**	50
05, 06"	20"	102.5	**4,001.00**	50

REGULARLY FURNISHED: Duco Cast Iron Wide Flange Body with Flashing Clamp, 1/16" Thick, 4" High Stainless Steel Perforated Gravel Stop with 3/8" Dia. Openings and Polyethylene Dome.

OUTLET VARIATIONS (Specify type of outlet and pipe size in inches.)

Outlet Type	Outlet Designation Outlet Type/Pipe Size	"B" Body HT. DIM.	ADD
Inside Caulk	C02, C03, C04, C05, C06	5"	**N/C**
Speedi-Set SW	L02, L03, L04	5"	**N/C**
Speedi-Set XH	LXH02, LXH03, LXH04	5"	**N/C**
Threaded	T02, T03, T04, T05, T06	3 3/4"	**99.00**
No-Hub	Y02, Y03, Y04, Y05, Y06	5"	**N/C**

OPTIONS:		ADD
-AD	Aluminum Dome	**314.00**
-C	Aluminum Underdeck Clamp	**310.00**
-CID	CI Dome	**271.00**
-CIDG	Cast Iron Dome **with** Galvanizing	**730.00**
-CID8	8" High CI Dome	**589.00**
-CL	Angular Underdeck Clamp	**626.00**
-G	Galvanized CI	**1,603.00**
-GG	Perforated SS Gravel Stop over 4", per inch	**98.00**
-RBD	Rough Bronze Dome	**1,063.00**
-U	Vandal Proof Dome	**158.00**

FIG. 1020 16" DIAMETER - LOW PROFILE DOME

FUNCTION: Used in flat roof of any construction. Large low profile dome provides sufficient free area for quick drainage of rain water and protects the drain sump and connected piping from the intrusion of debris. Wide clamping surface holds flashing and roofing materials without puncturing.

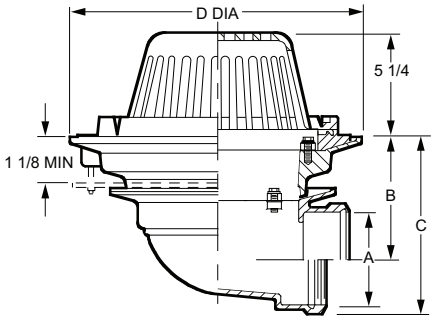

A OUTLET SIZE	B	D FLANGE DIA.	FREE AREA SQ IN	†DUCO CI POLY DOME	APPROX. WEIGHT LBS
02"	6 3/8"	15 1/4"	102.5	**1,387.00**	45
03"	6 3/8"	15 1/4"	102.5	**1,387.00**	45
04"	5 7/8"	15 1/4"	102.5	**1,387.00**	45
05"	5"	16"	102.5	**1,770.00**	55
06"	4 1/2"	16"	102.5	**1,770.00**	55

REGULARLY FURNISHED: Duco Cast Iron Body with Combined Flashing Clamp and Gravel Stop with Polyethylene Dome.

OUTLET VARIATIONS (Specify type of outlet and pipe size in inches.)

Outlet Type	Outlet Designation Outlet Type/Pipe Size	"C" Body HT. DIM.	ADD
Inside Caulk	C02	8 5/8"	**N/C**
	C03, C04	8 3/4"	**N/C**
	C05, C06	8 1/2"	**N/C**
Threaded Outlet	T02	8 5/8"	**N/C**
	T03, T04	8 3/4"	**N/C**
	T05, T06	8 1/2"	**N/C**
No-Hub	Y02	8 5/8"	**N/C**
	Y03, Y04	8 3/4"	**N/C**
	Y05, Y06	8 1/2"	**See Fig. 2646Y for list add to THREADED body**

OPTIONS:		ADD
-AD	Aluminum Dome	**314.00**
-C	Aluminum Underdeck Clamp	**310.00**
-C2	Secondary Flashing Clamp (Requires Extension)	**238.00**
-CID	CI Dome	**271.00**
-CIDG	Cast Iron Dome **with** Galvanizing	**730.00**
-CID8	CI Dome, 8" High	**589.00**
-CL	Angular Underdeck Clamp	**626.00**
-E	Extension up to 4"	**849.00**
	per inch over 4"	**202.00**
-G	Galvanized CI	**1,229.00**
-R	Sump Receiver	**345.00**
-RBD	Rough Bronze Dome	**1,063.00**
-SSM	SS Mesh on Metal Dome	**642.00**
-U	Vandal Proof Dome	**158.00**

†REGULARLY FURNISHED

FIG. 1070 - OVERFLOW DRAINS

FUNCTION: Used in flat roofs of any construction where a constant height of water is desired on the roof. It is also used on conventional roofs as a safety overflow, which receives water only when the build-up is greater than the setting of the standpipe. Standpipe type water dam can be cut to achieve various water depths on the roof.

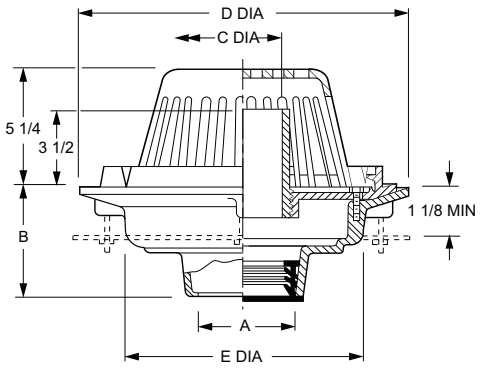

A OUTLET SIZE	C DIA.	D FLANGE DIA.	E DIA.	FREE AREA SQ IN	†DUCO CI POLY DOME	APPROX. WEIGHT LBS
02, 03, 04"	4"	15 1/4"	11"	102.5	**1,454.00**	65
05, 06"	6"	15 1/4"	11"	102.5	**1,840.00**	72
08"	8"	16"	12 1/2"	102.5	**2,230.00**	86

REGULARLY FURNISHED: Duco Cast Iron Body, Flashing Clamp and Gravel Stop with Polyethylene Dome and P.V.C. Standpipe.

OUTLET VARIATIONS (Specify type of outlet and pipe size in inches.)

Outlet Type	Outlet Designation Outlet Type/Pipe Size	"B" Body HT. DIM.	ADD
Inside Caulk	C02, C03, C04, C05, C06	5"	**N/C**
	C08	6"	**N/C**
Speedi-Set SW	L02, L03, L04	5"	**N/C**
Speedi-Set XH	LXH02, LXH03, LXH04	5"	**N/C**
Threaded	T02, T03, T04, T05, T06	3 3/4"	**99.00**
	T08	5"	**99.00**
No-Hub	Y02, Y03, Y04, Y05, Y06	5"	**N/C**
	Y08	6"	**N/C**

OPTIONS:		ADD
-AD	Aluminum Dome	**314.00**
-BZS	Bronze Standpipe	**409.00**
-C	Aluminum Underdeck Clamp	**310.00**
-C2	Secondary Flashing Clamp (Requires Extension)	**238.00**
-CID	CI Dome	**271.00**
-CIDG	Cast Iron Dome **with** Galvanizing	**730.00**
-CID8	8" High CI Dome	**589.00**
-CIS	Cast Iron Standpipe	**310.00**
-CL	Angular Underdeck Clamp	**626.00**
-DE	Deck Elevator Extension (Deck Elevator Kit)	**1,325.00**
-DX	Wide Flange	**1,696.00**
-E	Extension up to 4"	**849.00**
	per inch over 4"	**202.00**
-G	Galvanized Cast Iron	**1,229.00**
-R	Sump Receiver	**345.00**
-RBD	Rough Bronze Dome	**1,063.00**
-RDP	Roof Deck Plate	**556.00**
-SSM	SS Mesh on Metal Dome	**642.00**
-U	Vandal Proof Dome	**158.00**

FIG. 1074 - ADJUSTABLE TOP WITH STANDPIPE

FUNCTION: Used in flat roofs of any construction where a constant height of water is desired on the roof. It is also used on conventional roofs as a safety overflow, which receives water only when the build-up is greater than the setting of the cut standpipe. Standpipe type water dam can be cut to achieve various water depths on the roof. Wide clamping surface holds flashing and roofing materials without puncturing. Large low profile dome provides sufficient free area for quick drainage of rain water and protects the drain sump and connected piping from the intrusion of debris.

1074 Same as 1070 with Adjustable Extension

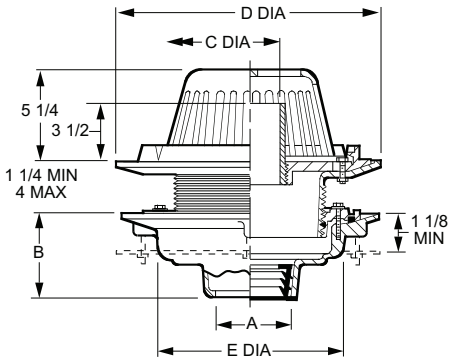

A OUTLET SIZE	C DIA.	D FLANGE DIA.	E DIA.	FREE AREA SQ IN	†DUCO CI POLY DOME	APPROX. WEIGHT LBS
02, 03, 04"	4"	15 1/4"	11"	102.5	**2,361.00**	65
05, 06"	6"	15 1/4"	11"	102.5	**2,744.00**	72
08"	8"	16"	12 1/2"	102.5	**3,140.00**	86

REGULARLY FURNISHED: Duco Cast Iron Body with Adjustable Extension Sleeve, Reversible Collar, P.V.C. Standpipe, Polyethylene Dome and Combined Flashing Clamp and Gravel Stop.

OUTLET VARIATIONS (Specify type of outlet and pipe size in inches.)

Outlet Type	Outlet Designation Outlet Type/Pipe Size	"B" Body HT. DIM.	ADD
Inside Caulk	C02, C03, C04, C05, C06	5"	**N/C**
	C08	6"	**N/C**
Speedi-Set SW	L02, L03, L04	5"	**N/C**
Speedi-Set XH	LXH02, LXH03, LXH04	5"	**N/C**
Threaded	T02, T03, T04, T05, T06	3 3/4"	**99.00**
	T08	5"	**99.00**
No-Hub	Y02, Y03, Y04, Y05, Y06	5"	**N/C**
	Y08	6"	**N/C**

OPTIONS:		ADD
-AD	Aluminum Dome	**314.00**
-BZS	Bronze Standpipe	**409.00**
-C	Underdeck Clamp	**310.00**
-C2	Secondary Flashing Clamp (Requires Extension)	**238.00**
-CID	CI Dome	**271.00**
-CIDG	Cast Iron Dome **with** Galvanizing	**730.00**
-CID8	8" High CI Dome	**589.00**
-CL	Angular Underdeck Clamp	**626.00**
-CIS	Cast Iron Standpipe	**310.00**
-DE	Deck Elevator Extension (Deck Elevator Kit)	**1,325.00**
-DX	Wide Flange	**1,696.00**
-G	Galvanized Cast Iron	**1,660.00**
-R	Sump Receiver	**345.00**
-RBD	Rough Bronze Dome	**1,063.00**
-RDP	Roof Deck Plate	**556.00**
-SSM	SS Mesh on Metal Dome	**642.00**
-U	Vandal Proof Dome	**158.00**

†REGULARLY FURNISHED

FIG. 1080 SPECIAL PURPOSE ROOF DRAINS WATER DAM TYPE

FUNCTION: Used in flat roofs of any construction where a constant height of water is desired on the roof. It may also be used as an emergency overflow for conventional roofs, draining rain water when the depth of the water on the roof reaches the water dam height.

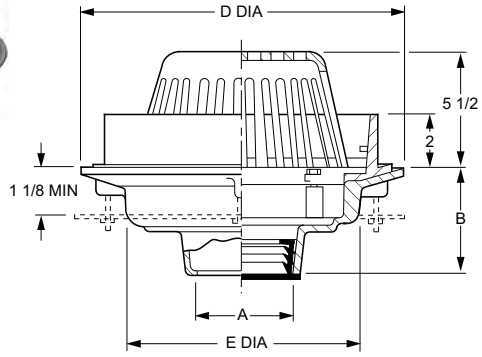

A OUTLET SIZE	D FLANGE DIA.	E DIA.	FREE AREA SQ IN	†DUCO CI POLY DOME	DUCO CI W/ ALUM DOME	APPROX. WEIGHT LBS
02, 03, 04"	15 1/4"	11"	102.5	**1,204.00**	**1,518.00**	62
05, 06"	15 1/4"	11"	102.5	**1,592.00**	**1,906.00**	79
08"	16"	12 1/2"	102.5	**1,982.00**	**2,296.00**	112

A OUTLET SIZE	D FLANGE DIA.	E DIA.	FREE AREA SQ IN	**†DUCO CI CI DOME	DUCO CI W/ ALUM DOME	APPROX. WEIGHT LBS
08"	20"	16"	228	**3,282.00**	**4,034.00**	118
10"	20"	16"	228	**3,531.00**	**4,283.00**	118
12"	20"	16"	228	**3,731.00**	**4,483.00**	118

Add $458.00** to Galvanize the Cast Iron Dome.

REGULARLY FURNISHED: Duco Cast Iron Body, Flashing Clamp and Gravel Stop with Dome and Cast Iron Water Dam.

OUTLET VARIATIONS (Specify type of outlet and pipe size in inches.)

Outlet Type	Outlet Designation Outlet Type/Pipe Size	"B" Body HT. DIM.	ADD
Inside Caulk	C02, C03, C04, C05, C06	5"	N/C
	C08	*6"	N/C
	C10	7 3/4"	N/C
Speedi-Set SW	L02, L03, L04	5"	N/C
Speedi-Set XH	LXH02, LXH03, LXH04	5"	N/C
Threaded	T02, T03, T04, T05, T06	3 3/4"	99.00
	T08	*5"	99.00
	T10	7 3/4"	99.00
No-Hub	Y02, Y03, Y04, Y05, Y06	5"	N/C
	Y08	*6"	N/C
	Y10, Y12	7 3/4"	N/C

*This dimension is for 16" dia. flange size body. For 20" flange size body dimension is 7 3/4"

OPTIONS:		ADD
-AE	Adjustable Extension	905.00
-C	Aluminum Underdeck Clamp (15 & 16" Flange Bodies)	310.00
-C	Aluminum Underdeck Clamp (20" Flange Bodies)	616.00
-C2	Secondary Flashing Clamp (Requires Extension)	238.00
-CID	CI Dome (when not reg. furn.)	271.00
-CIDG	Cast Iron Dome **with** Galvanizing	730.00
-CL	Angular Underdeck Clamp	626.00
-DE	Deck Elevator Extension (Deck Elevator Kit)	1,325.00
-DX	Wide Flange	1,696.00
-E	Extension up to 4"	849.00
	per inch over 4"	202.00
-G	Galvanized Cast Iron	1,229.00
-PDSSM	SS Mesh on Poly Dome	642.00
-R	Sump Receiver (15 & 16" Flange Bodies)	345.00
-R	Sump Receiver (20" Flange Bodies)	690.00
-RBD	Rough Bronze Dome	1,063.00
-RDP	Roof Deck Plate (15 & 16" Flange Bodies)	556.00
-RDP	Roof Deck Plate (20" Flange Bodies)	994.00
-SSM	SS Mesh on Metal Dome	642.00
-U	Vandal Proof Dome	158.00
-WD	Water Dam, 2 1/2, 3, 4"	481.00

FIG. 1083 RAINTROL® ROOF DRAINS

FUNCTION: Used to control the flow of rain water off a roof. Trapezoidal weirs limit the flow to the leader. Adjustable to provide various flow rates as required.

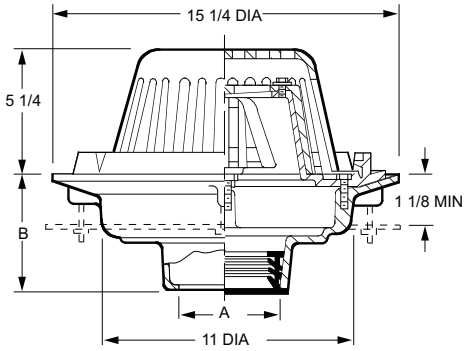

A OUTLET SIZE	FLANGE DIA.	FREE AREA SQ IN	†DUCO CI POLY DOME	APPROX. WEIGHT LBS
02, 03, 04"	15 1/4"	102.5	**2,420.00**	64
05, 06"	15 1/4"	102.5	**2,806.00**	68

REGULARLY FURNISHED: Duco Cast Iron Body with Combined Flashing Clamp and Gravel Stop with Adjustable "Flow Rate Control" Assembly and Polyethylene Dome.

OUTLET VARIATIONS (Specify type of outlet and pipe size in inches.)

Outlet Type	Outlet Designation Outlet Type/Pipe Size	"B" Body HT. DIM.	ADD
Inside Caulk	C02, C03, C04, C05, C06	5"	N/C
Speedi-Set SW	L02, L03, L04	5"	N/C
Speedi-Set XH	LXH02, LXH03, LXH04	5"	N/C
Threaded	T02, T03, T04, T05, T06	3 3/4"	99.00
No-Hub	Y02, Y03, Y04, Y05, Y06	5"	N/C

OPTIONS:		ADD
-AD	Aluminum Dome	314.00
-C	Aluminum Underdeck Clamp	310.00
-C2	Secondary Flashing Clamp (Requires Extension)	238.00
-CID	CI Dome	271.00
-CIDG	Cast Iron Dome **with** Galvanizing)	730.00
-CID8	8" High CI Dome	589.00
-CL	Angular Underdeck Clamp	626.00
-DE	Deck Elevator Extension (Deck Elevator Kit)	1,325.00
-E	Extension up to 4"	849.00
	per inch over 4"	202.00
-G	Galvanized Cast Iron	1,229.00
-PDSSM	SS Mesh on Poly Dome	642.00
-R	Sump Receiver	345.00
-RBD	Rough Bronze Dome	1,063.00
-RDP	Roof Deck Plate	556.00
-U	Vandal Proof Dome	158.00
-WR	Multiple Weir Openings**	N/C

**Specify Number of Weir Openings

†REGULARLY FURNISHED

FIG. 1085 RAINTROL® ROOF DRAINS

FUNCTION: Used to control the flow of rain water off a roof. Trapezoidal weirs limit the flow to the leader. Adjustable to provide various flow rates as required.

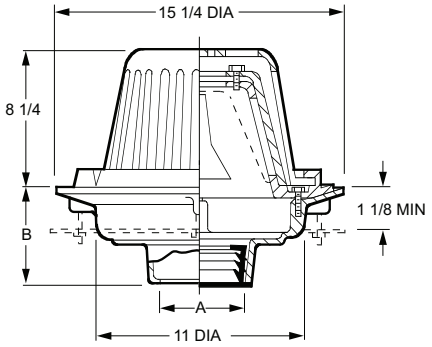

A OUTLET SIZE	FLANGE DIA	FREE AREA SQ IN	†DUCO CI CI DOME	APPROX. WEIGHT LBS
02, 03, 04"	15 1/4"	122	**2,686.00**	66
05, 06"	15 1/4"	122	**3,072.00**	72

REGULARLY FURNISHED: Duco Cast Iron Body with Combined Flashing Clamp and Gravel Stop with Adjustable "Flow Rate Control" Assembly and Cast Iron Dome.

OUTLET VARIATIONS (Specify type of outlet and pipe size in inches.)

Outlet Type	Outlet Designation Outlet Type/Pipe Size	"B" Body HT. DIM.	ADD
Inside Caulk	C02, C03, C04, C05, C06	5"	**N/C**
Speedi-Set SW	L02, L03, L04	5"	**N/C**
Speedi-Set XH	LXH02, LXH03, LXH04	5"	**N/C**
Threaded	T02, T03, T04, T05, T06	3 3/4"	**99.00**
No-Hub	Y02, Y03, Y04, Y05, Y06	5"	**N/C**

OPTIONS:		ADD
-AD	Aluminum Dome	**639.00**
-C	Aluminum Underdeck Clamp	**310.00**
-C2	Secondary Flashing Clamp (Requires Extension)	**238.00**
-CIDG	Galvanized Cast Iron Dome	**458.00**
-CL	Angular Underdeck Clamp	**626.00**
-DE	Deck Elevator Extension (Deck Elevator Kit)	**1,325.00**
-E	Extension up to 4"	**849.00**
	per inch over 4"	**202.00**
-G	Galvanized Cast Iron	**1,229.00**
-R	Sump Receiver	**345.00**
-RDP	Roof Deck Plate	**556.00**
-U	Vandal Proof Dome	**158.00**
-WR	Multiple Weir Openings**	**N/C**

**Specify Number of Weir Openings

FIG. 1088 RAINTROL® ROOF DRAINS

FUNCTION: Used to control the flow of rain water off a roof. Trapezoidal weirs limit the flow to the leader. Adjustable to provide various flow rates as required.

1088 Same as 1083 with Side Outlet

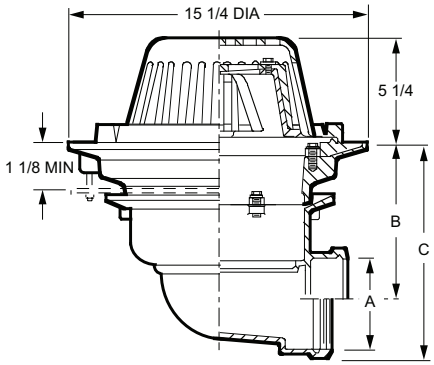

A OUTLET SIZE	FLANGE DIA.	B	FREE AREA SQ IN	†DUCO CI POLY DOME	APPROX. WEIGHT LBS
02"	15 1/4"	6 7/8"	102.5	**2,895.00**	81
03"	15 1/4"	6 3/8"	102.5	**2,895.00**	81
04"	15 1/4"	5 7/8"	102.5	**2,895.00**	81
05"	15 1/4"	5"	102.5	**3,282.00**	81
06"	15 1/4"	4 1/2"	102.5	**3,282.00**	81

REGULARLY FURNISHED: Duco Cast Iron Body with Combined Flashing Clamp and Gravel Stop with Adjustable "Flow Rate Control" Assembly and Polyethylene Dome.

OUTLET VARIATIONS (Specify type of outlet and pipe size in inches.)

Outlet Type	Outlet Designation Outlet Type/Pipe Size	"C" Body HT. DIM.	ADD
Inside Caulk	C02	8 5/8"	**N/C**
	C03, C04, C05, C06	8 3/4"	**N/C**
Threaded Outlet	T02	8 5/8"	**N/C**
	T03, T04, T05, T06	8 3/4"	**N/C**
No-Hub	Y02	8 5/8"	**N/C**
	Y03, Y04	8 3/4"	**N/C**

OPTIONS:		ADD
-AD	Aluminum Dome	**314.00**
-C	Aluminum Underdeck Clamp	**310.00**
-C2	Secondary Flashing Clamp (Requires Extension)	**238.00**
-CID	Cast Iron Dome	**271.00**
-CIDG	Cast Iron Dome **with** Galvanizing	**730.00**
-CID8	8" High Cast Iron Dome	**589.00**
-CL	Angular Underdeck Clamp	**626.00**
-E	4" High Extension,	**849.00**
	per inch over 4"	**202.00**
-G	Galvanized Cast Iron Body	**1,229.00**
-R	Sump Receiver	**345.00**
-RBD	Rough Bronze Dome	**1,063.00**
-U	Vandal Proof Dome	**158.00**
-WR	Multiple Weir Openings**	**N/C**

**Specify Number of Weir Openings

†REGULARLY FURNISHED

FIG. 1089 RAINTROL® ROOF DRAINS

FUNCTION: Used to control the flow of rain water off a roof. Trapezoidal weirs limit the flow to the leader. Adjustable to provide various flow rates as required.

1089 Same as 1085 with Side Outlet

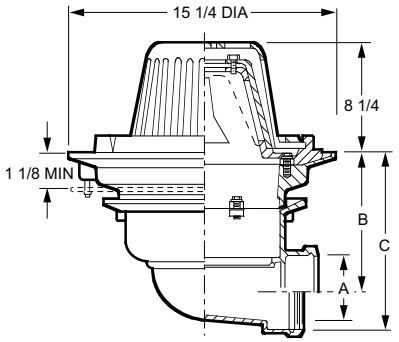

A OUTLET SIZE	FLANGE DIA.	B	FREE AREA SQ IN	†DUCO CI CI DOME	APPROX. WEIGHT LBS
02"	15 1/4"	6 7/8"	122	**3,164.00**	90
03"	15 1/4"	6 7/8"	122	**3,164.00**	90
04"	15 1/4"	5 7/8"	122	**3,164.00**	90

REGULARLY FURNISHED: Duco Cast Iron Body with Combined Flashing Clamp and Gravel Stop with Adjustable "Flow Rate Control" Assembly and Cast Iron Dome.

OUTLET VARIATIONS (Specify type of outlet and pipe size in inches.)

Outlet Type	Outlet Designation Outlet Type/Pipe Size	"C" Body HT. DIM.	ADD
Inside Caulk	C02	8 5/8"	**N/C**
	C03, C04	8 3/4"	**N/C**
Threaded	T02	8 5/8"	**N/C**
	T03, T04	8 3/4"	**N/C**
No-Hub	Y02,	8 5/8"	**N/C**
	Y03, Y04	8 3/4"	**N/C**

OPTIONS:		ADD
-C	Aluminum Underdeck Clamp	**310.00**
-C2	Secondary Flashing Clamp (Requires Extension)	**238.00**
-CIDG	Galvanized Cast Iron Dome	**458.00**
-CL	Angular Underdeck Clamp	**626.00**
-E	4" High Extension	**849.00**
	per inch over 4"	**202.00**
-G	Galvanized Cast Iron Body	**1,229.00**
-R	Sump Receiver	**345.00**
-U	Vandal Proof Dome	**158.00**
-WR	Multiple Weir Openings**	**N/C**

**Specify Number of Weir Openings

FIG. DX1240 MEDIUM WIDE FLANGE BODY WITH "SAFE-SET" BUCKET

FUNCTION: Used in promenade roof decks where waterproof traffic bearing covering is to be applied. Sediment bucket prevents debris from entering the waste system.

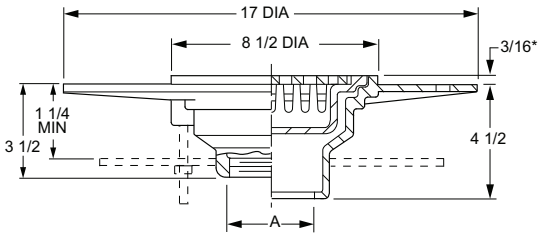

A OUTLET SIZE	FLANGE DIA.	TOP SIZE	FREE AREA SQ IN	†DUCO CI CI TOP	DUCO CI PB TOP	DUCO CI NB TOP	APPROX. WEIGHT LBS
02, 03, 04"	17"	8 1/2"	9.25	**1,110.00**	**1,673.00**	**1,803.00**	27

REGULARLY FURNISHED: Duco Cast Iron Wide Flange Body with Grate and "Safe-Set" Sediment Bucket.

OUTLET VARIATIONS (Specify type of outlet and pipe size in inches.)

Outlet Type	Outlet Designation Outlet Type/Pipe Size	Body HT. DIM.	ADD
Inside Caulk	C02, C03, C04	4 1/2"	**N/C**
Threaded	T02, T03, T04	3 1/2"	**99.00**
No-Hub	Y02, Y03, Y04	**See Fig. 2646Y for list add to THREADED body price**	

OPTIONS:		ADD
-C	Underdeck Clamp	**293.00**
-G	Galvanized Cast Iron	**876.00**
-SH	Securing Holes	**156.00**
-U	Vandal Proof Grate	**188.00**

*Add 3/16" when bronze top is specified.

Use only where light rainfall is prevalent or in covered roof areas. When heavy rainfall is anticipated use DX1010 or DX2566.

†REGULARLY FURNISHED

FIG. DX1250 SQUARE WIDE FLANGE BODY WITH NICKEL BRONZE TRACTOR GRATE

FUNCTION: Used in either wood or concrete deck installation where waterproof finished decks are installed. Large flange provides ample surface to receive the waterproofing membranes and the finished topping coat.

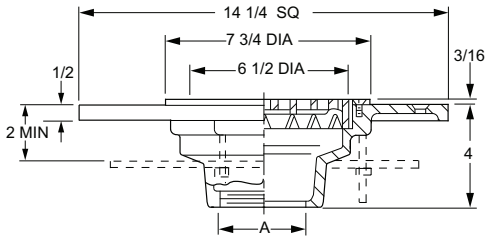

OUTLET VARIATIONS (Specify type of outlet and pipe size in inches.)

Outlet Type	Outlet Designation Outlet Type/Pipe Size	Body HT. DIM.	ADD
Inside Caulk	C02, C03, C04	4"	**N/C**
Threaded	T02, T03, T04	4"	**99.00**
No-Hub	Y02, Y03, Y04	**See Fig. 2646Y for list add to THREADED body price**	

OPTIONS:		ADD
-B	Sediment Bucket	**158.00**
-C	Underdeck Clamp	**191.00**
-G	Galvanized Cast Iron	**572.00**
-SH	Securing Holes	**156.00**
-U	Vandal Proof Grate	**188.00**

Use only where light rainfall is prevalent or in covered roof areas. When heavy rainfall is anticipated use DX1010 or DX2566.

A OUTLET SIZE	FLANGE SQ.	TOP SIZE	FREE AREA SQ IN	DUCO CI PB TOP	†DUCO CI NB TOP	APPROX. WEIGHT LBS
02, 03, 04"	14 1/4"	7 3/4"	12.5	**1,679.00**	**1,810.00**	38

REGULARLY FURNISHED: Duco Cast Iron Wide Flange Body with Nickel Bronze Tractor Grate and Rim.

FIG. 1310 12" DIAMETER LOW PROFILE DOME

FUNCTION: Used in flat roofs of any construction where a medium sized drain is required. Flashing clamp holds flashing and roofing material without puncturing. Low profile dome protects sump and intercepts debris.

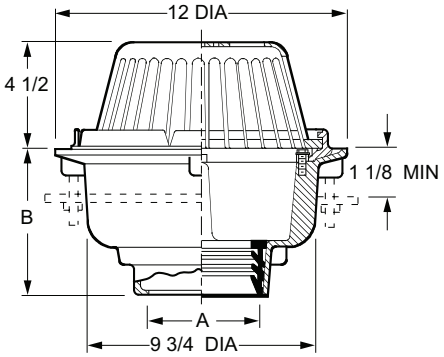

OUTLET VARIATIONS (Specify type of outlet and pipe size in inches.)

Outlet Type	Outlet Designation Outlet Type/Pipe Size	"B" Body HT. DIM.	ADD
Inside Caulk	C02, C03, C04, C05, C06	6"	**N/C**
Speedi-Set SW	L02, L03, L04	6"	**N/C**
Speedi-Set XH	LXH02, LXH03, LXH04	6"	**N/C**
Threaded	T02, T03, T04, T05, T06	4 3/4"	**99.00**
No-Hub	Y02, Y03, Y04, Y05, Y06	6"	**N/C**

OPTIONS:		ADD
-AD	Aluminum Dome	**230.00**
-C	Underdeck Clamp	**191.00**
-C2	Secondary Flashing Clamp (Requires Extension)	**238.00**
-CID	Cast Iron Dome	**202.00**
-CIDG	Cast Iron Dome **with** Galvanizing	**667.00**
-CIDSSM	Cast Iron Dome w/SS Mesh	**794.00**
-CL	Angular Underdeck Clamp	**626.00**
-E	Ext Per Inch, CI	**108.00**
-C2E04P	Sec. Flashing Clamp w/4" Perf SS Extension	**1,049.00**
-R	Sump Receiver	**327.00**
-G	Galvanized Cast Iron	**507.00**
-RBD	Rough Bronze Dome	**524.00**
-RDP	Roof Deck Plate	**435.00**
-U	Vandal Proof Dome	**147.00**
-WD02	2" Solid Water Dam	**246.00**

A OUTLET SIZE	FLANGE DIA.	FREE AREA SQ IN	†DUCO CI POLY DOME	APPROX. WEIGHT LBS
02, 03, 04"	12"	71.5	**811.00**	27
05, 06"	12"	71.5	**811.00**	27

REGULARLY FURNISHED: Duco Cast Iron Body with Combined Flashing Clamp and Gravel Stop with Polyethylene Dome.

†REGULARLY FURNISHED

FIG. 1320 12" DIAMETER LOW PROFILE DOME

FUNCTION: Used in flat roofs of any construction where a medium sized drain is required. Flashing clamp holds flashing and roofing material without puncturing. Low profile dome protects sump and intercepts debris.

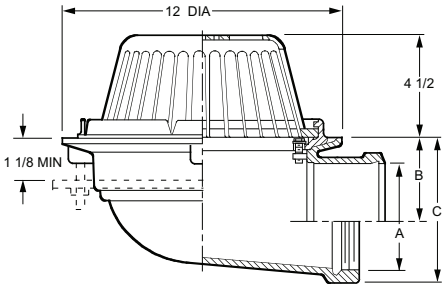

OUTLET VARIATIONS (Specify type of outlet and pipe size in inches.)

Outlet Type	Outlet Designation Outlet Type/Pipe Size	"C" Body HT. DIM.	ADD
Inside Caulk	C02, C03, C04	6 5/8"	**N/C**
Threaded	T02, T03, T04	6 5/8"	**N/C**
No-Hub	Y02, Y03, Y04	6 5/8"	**N/C**

OPTIONS:		ADD
-AD	Aluminum Dome	**230.00**
-C	Underdeck Clamp	**191.00**
-C2	Secondary Flashing Clamp (Requires Extension)	**238.00**
-CID	Cast Iron Dome	**202.00**
-CIDG	Cast Iron Dome **with** Galvanizing	**667.00**
-CIDSSM	Cast Iron Dome w/SS Mesh	**794.00**
-CL	Angular Underdeck Clamp	**626.00**
-E	Ext Per Inch, CI	**108.00**
-C2E04P	Sec. Flashing Clamp w/4" Perf SS Extension	**1,049.00**
-G	Galvanized Cast Iron	**507.00**
-R	Sump Receiver	**327.00**
-RBD	Rough Bronze Dome	**524.00**
-U	Vandal Proof Dome	**147.00**
-WD02	2" Solid Water Dam	**246.00**

A OUTLET SIZE	FLANGE DIA.	B	FREE AREA SQ IN	†DUCO CI POLY DOME	APPROX. WEIGHT LBS
02"	12"	4 1/2"	71.5	**1,036.00**	30
03"	12"	4"	71.5	**1,036.00**	30
04"	12"	3 1/2"	71.5	**1,036.00**	30

REGULARLY FURNISHED: Duco Cast Iron Body with Combined Flashing Clamp and Gravel Stop with Polyethylene Dome.

FIG. 1330 8 1/2" DIAMETER LOW PROFILE DOME

FUNCTION: Used in flat roofs, gutters or valleys of any construction. Small diameter pan is particularly adaptable to gutters and valleys where limited space is available. Flashing clamp holds flashing and roofing materials without puncturing. Low profile dome provides sufficient free area for quick drainage of rain water and protects the drain sump and connected piping from the intrusion of debris.

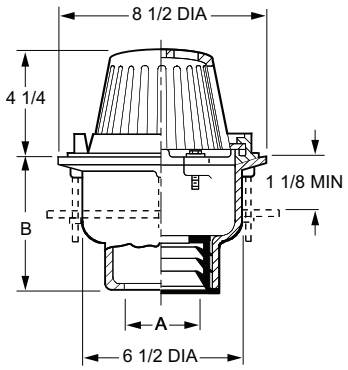

OUTLET VARIATIONS (Specify type of outlet and pipe size in inches.)

Outlet Type	Outlet Designation Outlet Type/Pipe Size	"B" Body HT. DIM.	ADD
Inside Caulk	C02, C03, C04	5 1/2"	**N/C**
Speedi-Set SW	L02, L03, L04	5 1/2"	**N/C**
Speedi-Set XH	LXH02, LXH03, LXH04	5 1/2"	**N/C**
Threaded	T02, T03, T04	4 1/4"	**99.00**
No-Hub	Y02, Y03, Y04	5 1/2"	**N/C**

OPTIONS:		ADD
-AD	Aluminum Dome	**230.00**
-C	Underdeck Clamp	**191.00**
-C2	Secondary Flashing Clamp (Requires Extension)	**238.00**
-CID	Cast Iron Dome	**122.00**
-CIDG	Cast Iron Dome **with** Galvanizing	**307.00**
-CIDSSM	Cast Iron Dome w/SS Mesh	**570.00**
-CL	Angular Underdeck Clamp	**626.00**
-E	Ext Per Inch, CI	**108.00**
-C2E04P	Sec. Flashing Clamp w/4" Perf SS Extension	**831.00**
-G	Galvanized Cast Iron	**252.00**
-R	Sump Receiver	**327.00**
-RBD	Rough Bronze Dome	**435.00**
-RDP	Roof Deck Plate	**435.00**
-U	Vandal Proof Dome	**147.00**
-WD02	2" Solid Water Dam	**246.00**

A OUTLET SIZE	FLANGE DIA.	FREE AREA SQ IN	†DUCO CI POLY DOME	APPROX. WEIGHT LBS
02, 03, 04"	8 1/2"	41.5	**683.00**	30

REGULARLY FURNISHED: Duco Cast Iron Body with Combined Flashing Clamp and Gravel Stop with Polyethylene Dome.

†REGULARLY FURNISHED

FIG. 1340 8 1/2" DIAMETER LOW PROFILE DOME

FUNCTION: Used in flat roofs, gutters or valleys of any construction. Small diameter pan is particularly adaptable to gutters and valleys where limited space is available. Flashing clamp holds flashing and roofing materials without puncturing. Low profile dome provides sufficient free area or quick drainage of rain water and protects the drain sump and connected piping from the intrusion of debris.

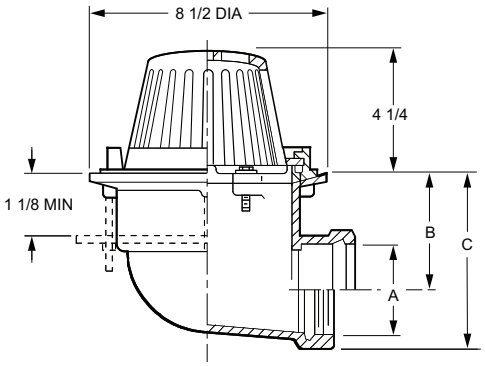

A OUTLET SIZE	FLANGE DIA.	B	FREE AREA SQ IN	†DUCO CI POLY DOME	DUCO CI CI DOME	APPROX. WEIGHT LBS
02"	8 1/2"	4 1/2"	41.5	**914.00**	**1,036.00**	30
03"	8 1/2"	4"	41.5	**914.00**	**1,036.00**	30
04"	8 1/2"	3 1/2"	41.5	**914.00**	**1,036.00**	30

REGULARLY FURNISHED: Duco Cast Iron Body with Combined Flashing Clamp and Gravel Stop with Polyethylene Dome.

OUTLET VARIATIONS (Specify type of outlet and pipe size in inches.)

Outlet Type	Outlet Designation Outlet Type/Pipe Size	"C" Body HT. DIM.	ADD
Inside Caulk	C02, C03, C04	6 1/4"	**N/C**
Threaded	T02, T03, T04	6 1/4"	**N/C**
No-Hub	Y02, Y03, Y04	**See Fig. 2646Y for list add to THREADED body**	

OPTIONS:		ADD
-AD	Aluminum Dome	**230.00**
-C	Underdeck Clamp	**191.00**
-C2	Secondary Flashing Clamp (Requires Extension)	**238.00**
-CIDG	Cast Iron Dome **w/Galvanizing**	**307.00**
-CIDSSM	SS Mesh on Metal Dome	**570.00**
-CL	Angular Underdeck Clamp	**626.00**
-E	Ext Per Inch, CI	**108.00**
-C2E04P	Sec. Flashing Clamp w/4" Perf SS Extension	**831.00**
-G	Galvanized Cast Iron	**252.00**
-R	Sump Receiver	**327.00**
-RBD	Rough Bronze Dome	**435.00**
-U	Vandal Proof Dome	**147.00**
-WD02	2" Solid Water Dam	**246.00**

FIG. 1409 PROMENADE DECK DRAIN

FUNCTION: Used in roof deck systems where the insulated membrane assembly method of waterproofing is provided. Used where built-up felt and asphalt waterproofing is installed on a flat roof construction which is designed for parking decks or promenades for recreational purposes.

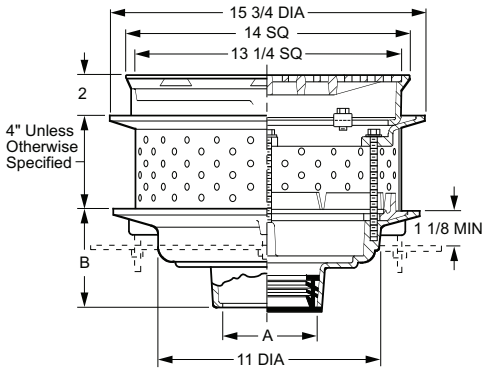

A OUTLET SIZE	TOP SIZE	FREE AREA SQ IN	†DUCO CI	DUCO CI PB TOP	DUCO CI NB TOP	APPROX. WEIGHT LBS
02, 03, 04"	14"	50.25	**2,562.00**	**3,612.00**	**3,859.00**	65
05, 06"	14"	50.25	**2,947.00**	**3,997.00**	**4,244.00**	72

REGULARLY FURNISHED: Duco Cast Iron Body, Perforated Stainless Steel Extension with Secondary Flashing Clamp, Cast Iron Top Frame and Heavy Duty Secured Grate.

OUTLET VARIATIONS (Specify type of outlet and pipe size in inches.)

Outlet Type	Outlet Designation Outlet Type/Pipe Size	"B" Body HT. DIM.	ADD
Inside Caulk	C02, C03, C04, C05, C06,	5"	**N/C**
Speedi-Set SW	L02, L03, L04	5"	**N/C**
Speedi-Set XH	LXH02, LXH03, LXH04	5"	**N/C**
Threaded	T02, T03, T04, T05, T06,	3 3/4"	**99.00**
No-Hub	Y02, Y03, Y04, Y05, Y06	5"	**N/C**

OPTIONS:		ADD
-B	Sediment Bucket	**327.00**
-C	Aluminum Underdeck Clamp	**310.00**
-CL	Angular Underdeck Clamp	**626.00**
-E	Perf. Extension, to 4"	**N/C**
	Over 4", per inch	**98.00**
-G	Galvanized Cast Iron	**1,140.00**
-HP	Heelproof Grate	**N/C**
-M	Ductile Iron Grate	**788.00**
-R	Sump Receiver	**345.00**
-U	Vandal Proof Grate	**188.00**
-W	3/8" Weep Holes in Collar (When "Loose-Set" pavers are required)	**246.00**

†REGULARLY FURNISHED

FIG. 1410 LARGE - 14" DECK DRAINS

FUNCTION: Used in flat roofs and decks which are designed as parking decks or promenades for recreational purposes. Body and accessories are compatible for installation in all types of roof construction.Large square top blends in with "block" patterns and has sufficient open free area for proper drainage.

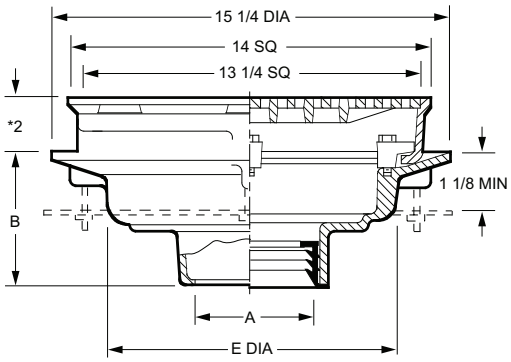

A OUTLET SIZE	TOP SIZE	E DIA	FREE AREA SQ IN	†DUCO CI	DUCO CI PB TOP	DUCO CI NB TOP	APPROX. WEIGHT LBS
02, 03, 04"	14"	11"	50.25	**1,549.00**	**2,599.00**	**2,846.00**	47
05, 06"	14"	11"	50.25	**1,933.00**	**2,983.00**	**3,230.00**	48
08"	14"	12 1/2"	50.25	**2,328.00**	**3,378.00**	**3,625.00**	65

REGULARLY FURNISHED: Duco Cast Iron Body and Flashing Clamp with Seepage Openings and Secured Square Hole Heavy Duty Grate.

NOTE: Floor drains or area drains used to drain areas subject to rainfall should have an open area equal to twice the cross sectional area of the connecting pipe.

OUTLET VARIATIONS (Specify type of outlet and pipe size in inches.)

Outlet Type	Outlet Designation Outlet Type/Pipe Size	"B" Body HT. DIM.	ADD
Inside Caulk	C02, C03, C04, C05, C06	5"	**N/C**
	C08	6"	**N/C**
Speedi-Set SW	L02, L03, L04	5"	**N/C**
Speedi-Set XH	LXH02, LXH03, LXH04	5"	**N/C**
Threaded	T02, T03, T04, T05, T06	3 3/4"	**99.00**
	T08	5"	**99.00**
No-Hub	Y02, Y03, Y04, Y05, Y06	5"	**N/C**
	Y08	6"	**N/C**

OPTIONS:		ADD
-B	Sediment Bucket	**327.00**
-C	Aluminum Underdeck Clamp	**310.00**
-C2	Secondary Flashing Clamp (Requires Extension)	**238.00**
-CL	Angular Underdeck Clamp	**626.00**
-DE	Deck Elevator Extension	**1,325.00**
-DX	Wide Flange	**1,696.00**
-E	Extension, Up to 4"	**849.00**
	per inch over 4"	**202.00**
-G	Galvanized Cast Iron	**1,140.00**
-HP	Heelproof Grate	**N/C**
-M	Ductile Iron Grate	**788.00**
-NBM	DI Undergrate with NB Top, add to CI	**2,082.00**
-PBM	DI Undergrate with PB Top, add to CI	**1,839.00**
-R	Sump Receiver	**345.00**
-RDP	Roof Deck Plate	**556.00**
-U	Vandal Proof Grate	**188.00**
-W	3/8" Weep Holes in Collar (When "Loose-Set" pavers are required)	**246.00**

*Add 1/8" when bronze top is specified.

FIG. 1415 ADJUSTABLE ROOF DRAIN

FUNCTION: Used in roof systems where the insulated membrane assembly of waterproofing is provided. Used where built-up felt and asphalt waterproofing is installed on a flat roof construction which is designed for parking decks or promenades for recreational purposes. Adjustable extension sleeve permits top adjustment.

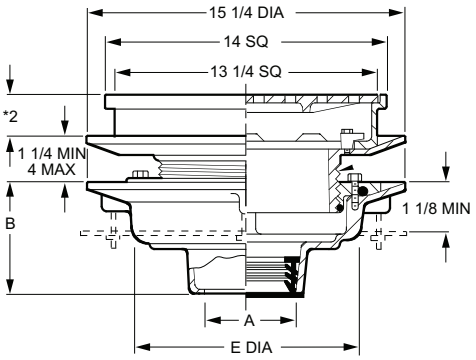

A OUTLET SIZE	TOP SIZE	E DIA.	FREE AREA SQ IN	†DUCO CI	DUCO CI PB TOP	DUCO CI NB TOP	APPROX. WEIGHT LBS
02, 03, 04"	14"	11"	50.25	**2,459.00**	**3,509.00**	**3,756.00**	65
05, 06"	14"	11"	50.25	**2,844.00**	**3,894.00**	**4,141.00**	72
08"	14"	12 1/2"	50.25	**3,231.00**	**4,281.00**	**4,528.00**	89

REGULARLY FURNISHED: Duco Cast Iron Body with Adjustable Extension Sleeve, Reversible Collar, Combined Flashing Collar and Clamp and Secured Square Hole Grate.

NOTE: Floor drains or area drains used to drain areas subject to rainfall should have an open area equal to twice the cross sectional area of the connecting pipe.

OUTLET VARIATIONS (Specify type of outlet and pipe size in inches.)

Outlet Type	Outlet Designation Outlet Type/Pipe Size	"B" Body HT. DIM.	ADD
Inside Caulk	C02, C03, C04, C05, C06	5"	**N/C**
	C08	6"	**N/C**
Speedi-Set SW	L02, L03, L04	5"	**N/C**
Speedi-Set XH	LXH02, LXH03, LXH04	5"	**N/C**
Threaded	T02, T03, T04, T05, T06	3 3/4"	**99.00**
	T08	5"	**99.00**
No-Hub	Y02, Y03, Y04, Y05, Y06	5"	**N/C**
	Y08	6"	**N/C**

OPTIONS:		ADD
-C	Aluminum Underdeck Clamp	**310.00**
-C2	Secondary Flashing Clamp (Requires Extension)	**238.00**
-CL	Angular Underdeck Clamp	**626.00**
-G	Galvanized Cast Iron	**1,140.00**
-HP	Heelproof Grate	**N/C**
-M	Ductile Iron Grate	**788.00**
-NBM	DI Undergrate with NB Top, add to CI	**2,082.00**
-PBM	DI Undergrate with PB Top add to CI	**1,839.00**
-R	Sump Receiver	**345.00**
-U	Vandal Proof Grate	**188.00**
-W	3/8" Weep Holes in Collar (When "Loose-Set" pavers are required)	**246.00**

*Add 1/8" when bronze top is specified.

†REGULARLY FURNISHED

FIG. 1416 HEAVY DUTY ROOF DRAIN

FUNCTION: Used in heavy traffic areas, such as parking decks, where waste water contains no sediment or debris and construction requires a shallow body. Large top area permits use where high flow is anticipated.

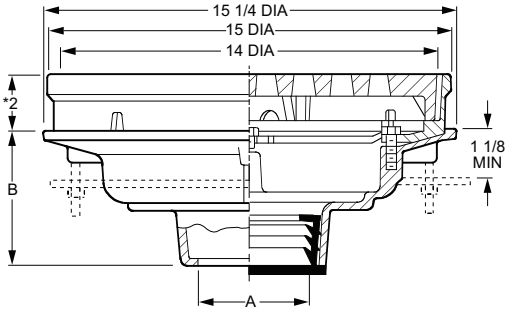

A OUTLET SIZE	TOP SIZE	FREE AREA SQ IN	†DUCO CI	DUCO CI PB TOP	DUCO CI NB TOP	APPROX. WEIGHT LBS
02, 03, 04"	15"	45	**2,012.00**	**4,973.00**	**5,316.00**	47
05, 06"	15"	45	**2,395.00**	**5,356.00**	**5,699.00**	48
08"	15"	45	**2,787.00**	**5,748.00**	**6,091.00**	65
10"	15"	45	**3,765.00**	**6,726.00**	**7,069.00**	65

REGULARLY FURNISHED: Duco Cast Iron Body, Flashing Collar and Heavy Duty Loose Set ADA Tractor Grate.

OUTLET VARIATIONS (Specify type of outlet and pipe size in inches.)

Outlet Type	Outlet Designation Outlet Type/Pipe Size	"B" Body HT. DIM.	ADD
Inside Caulk	C02, C03, C04, C05, C06	5"	**N/C**
	C08, C10	6"	**N/C**
Speedi-Set SW	L02, L03, L04	5"	**N/C**
Speedi-Set XH	LXH02, LXH03, LXH04	5"	**N/C**
Threaded	T02, T03, T04, T05, T06	3 3/4"	**99.00**
	T08, T10	6"	**99.00**
No-Hub	Y02, Y03, Y04, Y05, Y06	5"	**N/C**
	Y08, Y10	6"	**N/C**

OPTIONS:		ADD
-B	Sediment Bucket	**327.00**
-C	Aluminum Underdeck Clamp	**310.00**
-CL	Angular Underdeck Clamp	**626.00**
-D	Dome Grate, CI	**516.00**
-DNB	Dome Grate, add to CI	**4,455.00**
-DPB	Dome Grate, add to CI	**4,035.00**
-G	Galvanized Cast Iron	**1,409.00**
-M	Ductile Iron Grate	**847.00**
-R	Sump Receiver	**345.00**
-S	Square Top, CI	**607.00**
-SNB	Square Top, add to CI	**4,155.00**
-SPB	Square Top, add to CI	**3,764.00**
-U	Vandal Proof Grate	**188.00**

NOTE: Floor drains or area drains used to drain areas subject to rainfall should have an open area equal to twice the cross sectional area of the connecting pipe.

*Add 1/4" when bronze top is specified.

FIG. 1419 PROMENADE DECK DRAIN FOR SPECIAL APPLICATIONS

FUNCTION: Used in roof deck systems where the insulated membrane assembly method of waterproofing is provided. Used where a liquid membrane waterproofing is installed on a flat roof construction which is designed for parking decks or promenades for recreational purposes.

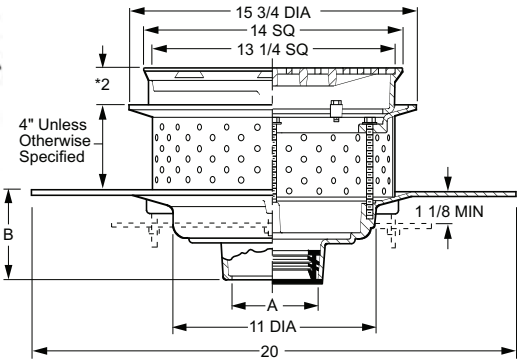

A OUTLET SIZE	TOP SIZE	FREE AREA SQ IN	†DUCO CI	DUCO CI PB TOP	DUCO CI NB TOP	APPROX. WEIGHT LBS
02, 03, 04"	14"	50.25	**4,254.00**	**5,304.00**	**5,551.00**	47
05, 06"	14"	50.25	**4,640.00**	**5,690.00**	**5,937.00**	48

REGULARLY FURNISHED: Duco Cast Iron Body, Perforated Stainless Steel Extension, Cast Iron Top Frame and Heavy Duty Secured Grate.

OUTLET VARIATIONS (Specify type of outlet and pipe size in inches.)

Outlet Type	Outlet Designation Outlet Type/Pipe Size	"B" Body HT. DIM.	ADD
Inside Caulk	C02, C03, C04, C05, C06	5"	**N/C**
Speedi-Set SW	L02, L03, L04	5"	**N/C**
Speedi-Set XH	LXH02, LXH03, LXH04	5"	**N/C**
Threaded	T02, T03, T04, T05, T06	3 3/4"	**99.00**
No-Hub	Y02, Y03, Y04, Y05, Y06	5"	**N/C**

OPTIONS:		ADD
-C	Aluminum Underdeck Clamp	**310.00**
-CL	Angular Underdeck Clamp	**626.00**
-E	Perf Extension, to 4"	**N/C**
	Over 4", per inch	**98.00**
-G	Galvanized Cast Iron	**1,603.00**
-HP	Heelproof Grate	**N/C**
-M	Ductile Iron Grate	**788.00**
-U	Vandal Proof Grate	**188.00**
-W	3/8" Weep Holes (When "Loose-Set" pavers are required)	**246.00**

NOTE: Floor drains or area drains used to drain areas subject to rainfall should have an open area equal to twice the cross sectional area of the connecting pipe.

*Add 1/8" when bronze top is specified.

†REGULARLY FURNISHED

FIG. 1420 LARGE - 14" DECK DRAIN

FUNCTION: Used in flat roofs and decks which are designed as parking decks or promenades for recreational purposes. Body and accessories are compatible for installation in all types of roof construction.Large square top blends in with "block" patterns and has sufficient open free area for proper drainage.

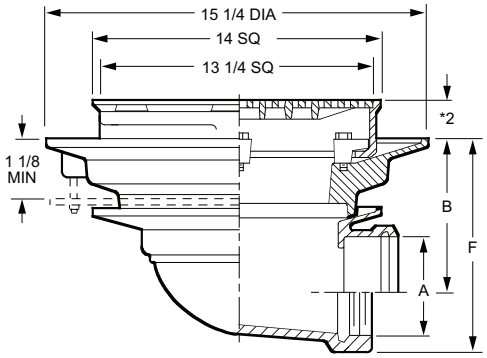

A OUTLET SIZE	TOP SIZE	B	FREE AREA SQ IN	†DUCO CI	DUCO CI PB TOP	DUCO CI NB TOP	APPROX. WEIGHT LBS
02"	14"	6 7/8"	50.25	**2,025.00**	**3,075.00**	**3,322.00**	47
03"	14"	6 3/8"	50.25	**2,025.00**	**3,075.00**	**3,322.00**	47
04"	14"	5 7/8"	50.25	**2,025.00**	**3,075.00**	**3,322.00**	47
05"	14"	5"	50.25	**2,414.00**	**3,464.00**	**3,711.00**	48
06"	14"	4 1/2"	50.25	**2,414.00**	**3,464.00**	**3,711.00**	48

REGULARLY FURNISHED: Duco Cast Iron Body and Flashing Clamp with Seepage Openings and Secured Square Hole Heavy Duty Grate.

OUTLET VARIATIONS (Specify type of outlet and pipe size in inches.)

Outlet Type	Outlet Designation Outlet Type/Pipe Size	"F" Body HT. DIM.	ADD
Inside Caulk	C02,	8 5/8"	**N/C**
	C03, C04	8 3/4"	**N/C**
	C05, C06	8 1/2"	**N/C**
Threaded	T02	8 5/8"	**N/C**
	T03, T04	8 3/4"	**N/C**
	T05, T06	8 1/2"	**N/C**
No-Hub	Y02	8 5/8"	**N/C**
	Y03, Y04	8 3/4"	**N/C**
	Y05, Y06	**See Fig. 2646Y for list add to THREADED body**	

OPTIONS:		ADD
-B	Sediment Bucket	**327.00**
-C	Aluminum Underdeck Clamp	**310.00**
-C2	Secondary Flashing Clamp (Requires Extension)	**238.00**
-CL	Angular Underdeck Clamp	**626.00**
-E	Extension, Up to 4"	**849.00**
	per inch over 4"	**202.00**
-G	Galvanized Cast Iron	**1,140.00**
-HP	Heelproof Grate	**N/C**
-M	Ductile Iron Grate	**788.00**
-NBM	DI Undergrate with NB Top, add to CI	**2,082.00**
-PBM	DI Undergrate with PB Top, add to CI	**1,839.00**
-R	Sump Receiver	**345.00**
-U	Vandal Proof Grate	**188.00**
-W	3/8" Weep Holes in Collar (When "Loose-Set" pavers are required)	**246.00**

NOTE: Floor drains or area drains used to drain areas subject to rainfall should have an open area equal to twice the cross sectional area of the connecting pipe.

*Add 1/8" when bronze top is specified.

FIG. 1450 MEDIUM - 11" SQUARE DECK DRAIN

FUNCTION: For use in small roof areas which are designed for promenade or recreational purposes. Square top design is compatible with "block" patterns. This drain should be used for small roof areas only and where light rainfall is expected.

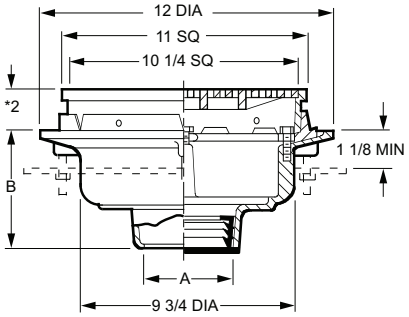

A OUTLET SIZE	TOP SIZE	FREE AREA SQ IN	†DUCO CI	DUCO CI PB TOP	DUCO CI NB TOP	APPROX. WEIGHT LBS
02, 03, 04"	11"	31	**1,391.00**	**2,216.00**	**2,344.00**	48
05, 06"	11"	31	**1,391.00**	**2,216.00**	**2,344.00**	48

REGULARLY FURNISHED: Duco Cast Iron Body and Flashing Clamp with Seepage Openings and Secured Square Hole Light Duty Grate.

OUTLET VARIATIONS (Specify type of outlet and pipe size in inches.)

Outlet Type	Outlet Designation Outlet Type/Pipe Size	B Body HT. DIM.	ADD
Inside Caulk	C02, C03, C04, C05, C06	6"	**N/C**
Speedi-Set SW	L02, L03, L04	6"	**N/C**
Speedi-Set XH	LXH02, LXH03, LXH04	6"	**N/C**
Threaded	T02, T03, T04, T05, T06	4 3/4"	**99.00**
No-Hub	Y02, Y03, Y04, Y05, Y06	6"	**N/C**

OPTIONS:		ADD
-B	Sediment Bucket	**327.00**
-C	Underdeck Clamp	**191.00**
-C2	Secondary Flashing Clamp (Requires Extension)	**238.00**
-CL	Angular Underdeck Clamp	**626.00**
-E	Extension per inch to 4"	**108.00**
-C2E04P	Sec. Flashing Clamp w/4" Perf SS Extension	**1,049.00**
-G	Galvanized Cast Iron	**640.00**
-HP	Heelproof Grate	**N/C**
-M	Ductile Iron Grate	**694.00**
-R	Sump Receiver	**327.00**
-U	Vandal Proof Grate	**188.00**

NOTE: Floor drains or area drains used to drain areas subject to rainfall should have an open area equal to twice the cross sectional area of the connecting pipe.

*Add 3/16" when bronze top is specified.

†REGULARLY FURNISHED

FIG. 1460 MEDIUM - 11" SQUARE PROMENADE DECK DRAIN

FUNCTION: Medium size deck drain for use in flat roof decks. Body and accessories are compatible for installation in all types of roof construction. Square medium size top fits in with "block" patterns. This drain should only be used in areas of moderate flow requirements.

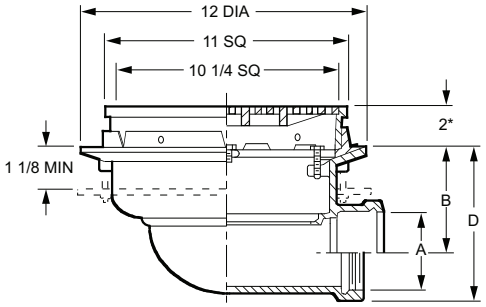

A OUTLET SIZE	TOP SIZE	B	FREE AREA SQ IN	†DUCO CI	DUCO CI PB TOP	DUCO CI NB TOP	APPROX. WEIGHT LBS
02"	11"	4 1/2"	31	**1,618.00**	**2,443.00**	**2,571.00**	51
03"	11"	4"	31	**1,618.00**	**2,443.00**	**2,571.00**	51
04"	11"	3 1/2"	31	**1,618.00**	**2,443.00**	**2,571.00**	51

REGULARLY FURNISHED: Duco Cast Iron Body and Flashing Clamp with Seepage Openings and Secured Square Hole Light Duty Grate.

OUTLET VARIATIONS (Specify type of outlet and pipe size in inches.)

Outlet Type	Outlet Designation Outlet Type/Pipe Size	D Body HT. DIM.	ADD
Inside Caulk	C02	6 1/2"	**N/C**
	C03, C04	6 5/8"	**N/C**
Threaded	T02,	6 1/2"	**N/C**
	T03, T04	6 5/8"	**N/C**
No-Hub	Y02	6 1/2"	**N/C**
	Y03, Y04	6 5/8"	**N/C**

OPTIONS:		ADD
-C	Underdeck Clamp	**191.00**
-C2	Secondary Flashing Clamp (Requires Extension)	**238.00**
-C2E04P	Sec. Flashing Clamp w/4" Perf SS Extension	**1,049.00**
-E	Extension, per inch to 4"	**108.00**
-G	Galvanized Cast Iron	**640.00**
-HP	Heelproof Grate	**N/C**
-M	Ductile Iron Grate	**694.00**
-R	Sump Receiver	**327.00**
-U	Vandal Proof Grate	**188.00**

NOTE: Floor drains or area drains used to drain areas subject to rainfall should have an open area equal to twice the cross sectional area of the connecting pipe.

*Add 3/16" when bronze top is specified.

FIG. 1470 SMALL - 8" SQUARE PROMENADE DECK DRAIN

FUNCTION: For use in small roof areas which are designed for promenade or recreational purposes. Square top design is compatible with "block" patterns. This drain should be used for small roof areas only and where light rainfall is expected.

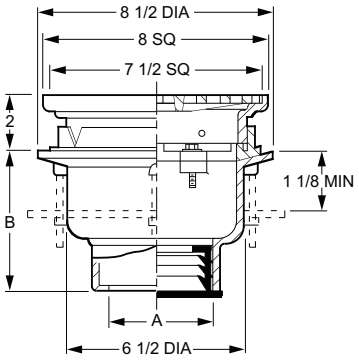

A OUTLET SIZE	TOP SIZE	FREE AREA SQ IN	†DUCO CI	DUCO CI PB TOP	DUCO CI NB TOP	APPROX. WEIGHT LBS
02, 03, 04"	8"	19	**1,054.00**	**1,540.00**	**1,606.00**	21

REGULARLY FURNISHED: Duco Cast Iron Body and Flashing Clamp with Seepage Openings and Secured Square Hole Light Duty Grate.

OUTLET VARIATIONS (Specify type of outlet and pipe size in inches.)

Outlet Type	Outlet Designation Outlet Type/Pipe Size	"B" Body HT. DIM.	ADD
Inside Caulk	C02, C03, C04	5 1/2"	**N/C**
Speedi-Set SW	L02, L03, L04	5 1/2"	**N/C**
Speedi-Set XH	LXH02, LXH03, LXH04	5 1/2"	**N/C**
Threaded	T02, T03, T04	4 1/4"	**99.00**
No-Hub	Y02, Y03, Y04	5 1/2"	**N/C**

OPTIONS:		ADD
-B	Sediment Bucket	**271.00**
-C	Underdeck Clamp	**191.00**
-C2	Secondary Flashing Clamp (Requires Extension)	**238.00**
-C2E04P	Secondary Flashing Clamp w/4" Perf SS Extension	**1,049.00**
-E	Extension, per inch to 4"	**108.00**
-G	Galvanized Cast Iron	**345.00**
-HP	Heelproof Grate	**N/C**
-M	Ductile Iron Grate	**611.00**
-R	Sump Receiver	**327.00**
-U	Vandal Proof Grate	**188.00**

NOTE: Floor drains or area drains used to drain areas subject to rainfall should have an open area equal to twice the cross sectional area of the connecting pipe.

†REGULARLY FURNISHED

FIG. 1480 SMALL - 8" SQUARE PROMENADE DECK DRAIN

FUNCTION: Medium size deck drain for use in flat roof decks. Body and accessories are compatible for installation in all types of roof construction. Square medium size top fits in with "block" patterns. This drain should only be used in areas of moderate flow requirements.

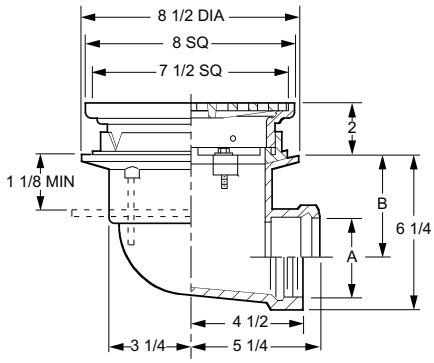

OUTLET VARIATIONS (Specify type of outlet and pipe size in inches.)

Outlet Type	Outlet Designation Outlet Type/Pipe Size	Body HT. DIM.	ADD
Inside Caulk	C02, C03, C04	6 1/4"	**N/C**
Threaded	T02, T03, T04	6 1/4"	**N/C**
No-Hub	Y02, Y03, Y04	**See Fig. 2646Y for list add to THREADED body**	

OPTIONS:

		ADD
-B	Sediment Bucket	**271.00**
-C	Underdeck Clamp	**191.00**
-C2	Secondary Flashing Clamp (Requires Extension)	**238.00**
-C2E04P	Secondary Flashing Clamp w/4" Perf SS Extension	**1,049.00**
-E	Extension, per inch to 4"	**108.00**
-G	Galvanized Cast Iron	**345.00**
-HP	Heelproof Grate	**N/C**
-M	Ductile Iron Grate	**611.00**
-R	Sump Receiver	**327.00**
-U	Vandal Proof Grate	**188.00**

A OUTLET SIZE	TOP SIZE	B	FREE AREA SQ IN	†DUCO CI	DUCO CI PB TOP	DUCO CI NB TOP	APPROX. WEIGHT LBS
02"	8"	4 1/2"	19	**1,292.00**	**1,778.00**	**1,844.00**	30
03"	8"	4"	19	**1,292.00**	**1,778.00**	**1,844.00**	30
04"	8"	3 1/2"	19	**1,292.00**	**1,778.00**	**1,844.00**	30

REGULARLY FURNISHED: Duco Cast Iron Body and Flashing Clamp with Seepage Openings and Secured Square Hole Light Duty Grate.

FIG. 1510 SCUPPER DRAIN - ANGLE GRATE

FUNCTION: Used at junction of roof and parapet. Side outlet 90° drains may be connected to outside downspout by using drain in conjunction with Fig. 1550 downspout adaptor. The angle grate prevents debris from blocking drainage.

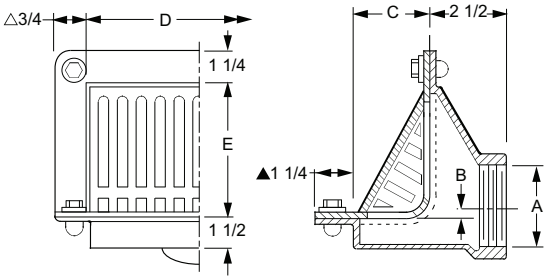

OUTLET VARIATIONS (Specify type of outlet and pipe size in inches.)

Outlet Type	Outlet Designation Outlet Type/Pipe Size	ADD
Threaded	T02, T03, T04	**N/C**
	T05, T06	**N/C**

OPTIONS:

		ADD
-G	Galvanized Cast Iron	
	02, 03, 04"	**308.00**
	05, 06"	**617.00**
-SEC	Secured Grate	**70.00**
-U	Vandal Proof Grate	**70.00**

A OUTLET SIZE	B	C	D	E	FREE AREA SQ IN	†DUCO CI	DUCO CI RB FACE	DUCO CI PB FACE	DUCO CI NB FACE	APPROX. WEIGHT LBS
02"	*	3 1/4"	8 3/4"	5	17.75	**794.00**	**1,346.00**	**1,762.00**	**2,093.00**	16
03"	1/4"	3 1/4"	8 3/4"	5	17.75	**794.00**	**1,346.00**	**1,762.00**	**2,093.00**	16
04"	1"	3 1/4"	8 3/4"	5	17.75	**794.00**	**1,346.00**	**1,762.00**	**2,093.00**	16
05"	1 3/4"	4 1/4"	10 1/2"	6 1/2"	35	**1,541.00**	**2,442.00**	**2,859.00**	**3,187.00**	23
06"	1 3/4"	4 1/4"	10 1/2"	6 1/2"	35	**1,541.00**	**2,442.00**	**2,859.00**	**3,187.00**	23

* 02" Size "B" Dimension is 1/4" below flange, not above as shown.
△For 05 & 06" size, add 1/2".
▲For 05 & 06" size, reduce by 3/16".

REGULARLY FURNISHED:
Duco Cast Iron Body, Flashing Clamp and Loose Set Grate.

†REGULARLY FURNISHED

FIG. 1520 SCUPPER DRAIN - FLUSH GRATE

FUNCTION: Used at junction of roof and parapet. Side outlet 90° drains may be connected to outside downspout by using drain in conjunction with Fig. 1550 downspout adaptor. The flush grate prevents obstruction to traffic.

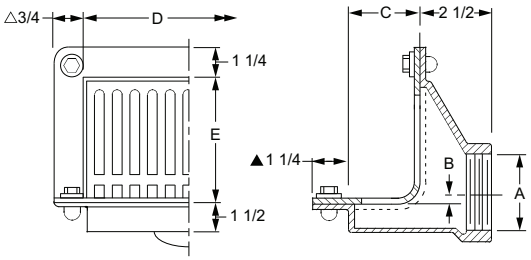

OUTLET VARIATIONS (Specify type of outlet and pipe size in inches.)

Outlet Type	Outlet Designation Outlet Type/Pipe Size	ADD
Threaded	T02, T03, T04	N/C
	T05, T06	N/C

OPTIONS:		ADD
-G	Galvanized Cast Iron	
	02, 03, 04"	308.00
	05, 06"	617.00
-SEC	Secured Grate	70.00
-U	Vandal Proof Grate	70.00

* 02" Size "B" Dimension is 1/4" below flange, not above as shown.
△For 05 & 06" size, add 1/2".
▲For 05 & 06" size, reduce by 3/16".

A OUTLET SIZE	B	C	D	E	FREE AREA SQ IN	†DUCO CI	DUCO CI RB FACE	DUCO CI PB FACE	DUCO CI NB FACE	APPROX. WEIGHT LBS
02"	*	3 1/4"	8 3/4"	5"	20	**860.00**	**1,412.00**	**1,828.00**	**2,159.00**	16
03"	1/4"	3 1/4"	8 3/4"	5"	20	**860.00**	**1,412.00**	**1,828.00**	**2,159.00**	16
04"	1"	3 1/4"	8 3/4"	5"	20	**860.00**	**1,412.00**	**1,828.00**	**2,159.00**	16
05"	1 3/4"	4 1/4"	10 1/2"	6 1/2"	40	**1,617.00**	**2,518.00**	**2,935.00**	**3,741.00**	23
06"	1 3/4"	4 1/4"	10 1/2"	6 1/2"	40	**1,617.00**	**2,518.00**	**2,935.00**	**3,741.00**	23

REGULARLY FURNISHED: Duco Cast Iron Body, Flashing Clamp and Loose Set Grate.

FIG. 1530 SCUPPER DRAIN - ANGLE GRATE

FUNCTION: Used at junction of roof and parapet. When connecting to an inside leader, the 45° outlet drains may be easily offset into the wall. The angle grate prevents debris from blocking drainage.

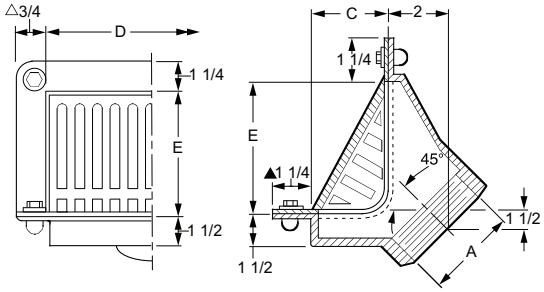

OUTLET VARIATIONS (Specify type of outlet and pipe size in inches.)

Outlet Type	Outlet Designation Outlet Type/Pipe Size	ADD
Threaded	T02, T03, T04	N/C
	T05, T06	N/C

OPTIONS:		ADD
-G	Galvanized Cast Iron	
	02, 03, 04"	308.00
	05, 06"	617.00
-SEC	Secured Grate	70.00
-U	Vandal Proof Grate	70.00

△For 05 & 06" size, add 1/2".
▲For 05 & 06" size, reduce by 3/16".

A OUTLET SIZE	C	D	E	FREE AREA SQ IN	†DUCO CI	DUCO CI RB FACE	DUCO CI PB FACE	DUCO CI NB FACE	APPROX. WEIGHT LBS
02"	3 1/4"	8 3/4"	5"	17.75	**794.00**	**1,346.00**	**1,762.00**	**2,093.00**	16
03"	3 1/4"	8 3/4"	5"	17.75	**794.00**	**1,346.00**	**1,762.00**	**2,093.00**	16
04"	3 1/4"	8 3/4"	5"	17.75	**794.00**	**1,346.00**	**1,762.00**	**2,093.00**	16
05"	4 1/4"	10 1/2"	6 1/2"	35	**1,541.00**	**2,442.00**	**2,859.00**	**3,187.00**	23
06"	4 1/4"	10 1/2"	6 1/2"	35	**1,541.00**	**2,442.00**	**2,859.00**	**3,187.00**	23

REGULARLY FURNISHED: Duco Cast Iron Body, Flashing Clamp and Loose Set Grate.

†REGULARLY FURNISHED

FIG. 1540 SCUPPER DRAIN - FLUSH GRATE

FUNCTION: Used at junction of roof and parapet. When connecting to an inside leader, the 45° outlet drains may be easily offset into the wall. The flush grate prevents obstruction to traffic.

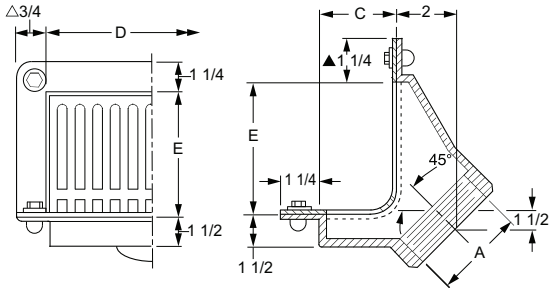

OUTLET VARIATIONS (Specify type of outlet and pipe size in inches.)

Outlet Type	Outlet Designation Outlet Type/Pipe Size	ADD
Threaded	T02, T03, T04	N/C
	T05, T06	N/C

OPTIONS:		ADD
-Galvanized CI		
	02, 03, 04"	308.00
	05, 06"	617.00
-SEC	Secured Grate	70.00
-U	Vandal Proof Grate	70.00

A OUTLET SIZE	C	D	E	FREE AREA SQ IN	†DUCO CI	DUCO CI RB FACE	DUCO CI PB FACE	DUCO CI NB FACE	APPROX. WEIGHT LBS
02"	3 1/4"	8 3/4"	5"	20	**860.00**	**1,412.00**	**1,828.00**	**2,159.00**	16
03"	3 1/4"	8 3/4"	5"	20	**860.00**	**1,412.00**	**1,828.00**	**2,159.00**	16
04"	3 1/4"	8 3/4"	5"	20	**860.00**	**1,412.00**	**1,828.00**	**2,159.00**	16
05"	4 1/4"	10 1/2"	6 1/2"	40	**1,617.00**	**2,518.00**	**2,935.00**	**3,741.00**	23
06"	4 1/4"	10 1/2"	6 1/2"	40	**1,617.00**	**2,518.00**	**2,935.00**	**3,741.00**	23

△For 05 & 06" size, add 1/2".
▲For 05 & 06" size, reduce by 3/16".

REGULARLY FURNISHED: Duco Cast Iron Body, Flashing Clamp and Loose Set Grate.

FIG. 1550 - DOWNSPOUT ADAPTOR

FUNCTION: Used in conjunction with scupper drains. Downspout adaptor is used to connect outside downspout to side outlet 90° drains.

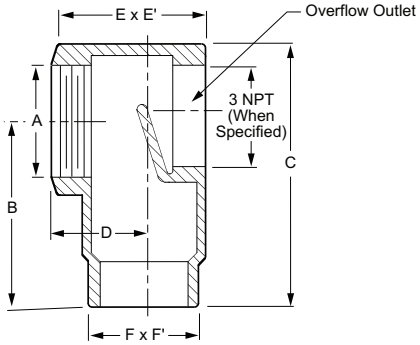

OPTIONS:		ADD
-N3	3" NPT Tapping	99.00

A OUTLET SIZE	B	C	D	E x E' TOP SIZE	F x F'	†DUCO CI	GALV CI	APPROX. WEIGHT LBS
02, 03, 04"	4 3/4"	7 1/4"	2 3/4"	4 1/4" x 5 3/8"	3" x 5"	**440.00**	**653.00**	16

REGULARLY FURNISHED: Duco Cast Iron.

FIG. 1560 SCUPPER DRAIN - 90° OUTLET

FUNCTION: Used at junction of roof and parapet or in metal lined gutters. Gasket and metal lining are secured with grate, insuring a watertight arrangement.

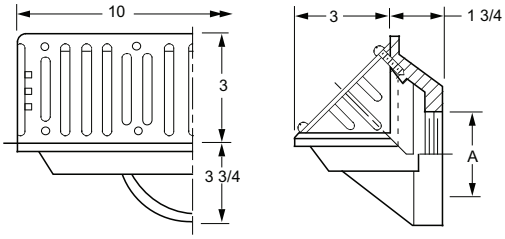

OUTLET VARIATIONS (Specify type of outlet and pipe size in inches.)

Outlet Type	Outlet Designation Outlet Type/Pipe Size	ADD
Threaded	T02, T03	N/C

A OUTLET SIZE	FLANGE SIZE	FREE AREA SQ IN	†ALL RB	RB BODY PB TOP(PB)	RB BODY NB TOP(NB)	APPROX. WEIGHT LBS
02, 03"	3 x 10"	14.5	**1,447.00**	**1,858.00**	**2,294.00**	21

REGULARLY FURNISHED: Cast Bronze Body with Combined Rough Bronze Grate, Flashing Clamp and Gasket.

†REGULARLY FURNISHED

FIG. 1570 SCUPPER DRAIN - 45° OUTLET

FUNCTION: Used at junction of roof and parapet or in metal lined gutters. Gasket and metal lining are secured with grate, insuring a watertight arrangement.

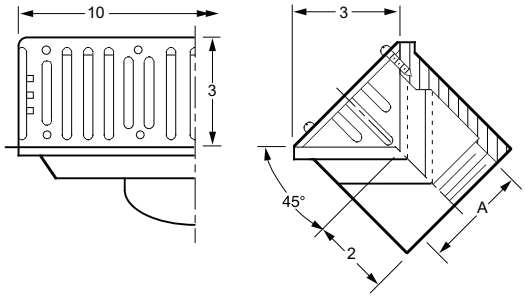

OUTLET VARIATIONS (Specify type of outlet and pipe size in inches.)

Outlet Type	Outlet Designation Outlet Type/Pipe Size	ADD
Threaded	T02, T03	N/C

A OUTLET SIZE	FLANGE SIZE	FREE AREA SQ IN	†ALL RB	RB BODY PB TOP(PB)	RB BODY NB TOP(NB)	APPROX. WEIGHT LBS
02, 03"	3 x 10"	14.5	**1,447.00**	**1,858.00**	**2,294.00**	21

REGULARLY FURNISHED: Cast Bronze Body with Combined Rough Bronze Grate, Flashing Clamp and Gasket.

FIG. 1580 SCUPPER DRAIN - CONVEX GRATE

FUNCTION: Used at specific angles of junction of roof and parapet with connection to outside conductor. Convex grate allows ample drainage area if sides become clogged with debris. Clamping arrangement insures watertight assembly.

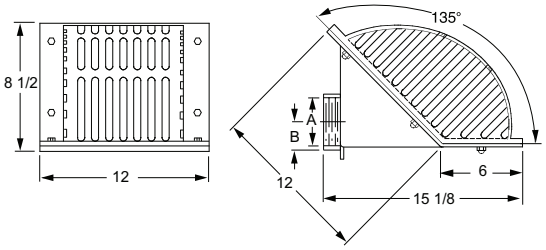

OUTLET VARIATIONS (Specify type of outlet and pipe size in inches.)

Outlet Type	Outlet Designation Outlet Type/Pipe Size	ADD
Threaded	T02, T03, T04	N/C
	T05, T06	N/C

A OUTLET SIZE	B	FLANGE SIZE	FREE AREA SQ IN	†GALV. STL RB TOP	GALV w/ PB TOP	GALV w/ NB TOP	APPROX. WEIGHT LBS
02"	1 3/4"	12" Wd	111	**4,825.00**	**5,515.00**	**5,808.00**	52
03"	2 1/4"	12" Wd	111	**4,825.00**	**5,515.00**	**5,808.00**	52
04"	2 3/4"	12" Wd	111	**4,825.00**	**5,515.00**	**5,808.00**	52
05"	3 1/4"	12" Wd	111	**4,825.00**	**5,515.00**	**5,808.00**	52
06"	4"	12" Wd	111	**4,825.00**	**5,515.00**	**5,808.00**	52

REGULARLY FURNISHED: Cold Galvanized Steel Body with Rough Bronze Grate and Flashing Clamp.

FIG. 1605 6" DIAMETER LOW PROFILE SIPHONIC GUTTER DRAIN

FUNCTION: For use in engineered siphonic roof drainage systems for gutters, parapets, small balconies, sills, cornices, marquees and other small overhanging areas where drainage of rainwater is required. Air baffle creates siphonic drainage action producing more efficient drainage than traditional gutter drains.

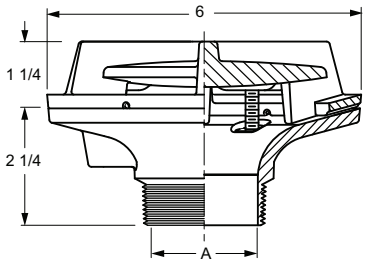

OUTLET VARIATIONS (Specify type of outlet and pipe size in inches.)

Outlet Type	Outlet Designation Outlet Type/Pipe Size	ADD
Male Threaded	T02	POA
No-Hub	Y02	POA

OPTIONS:		ADD
-G	Galvanized CI	POA
-U	Vandal Proof	POA

A OUTLET SIZE	FLANGE DIA.	FREE AREA SQ IN	†DUCO CI	APPROX. WEIGHT LBS
02"	6"	5.42	**POA**	16

REGULARLY FURNISHED: Duco Cast Iron Body with Combination Flashing Clamp and Air Baffle.

CONTACT SALES ENGINEERING FOR PROJECT EVALUATION PRIOR TO RECEIVING PRICING.

FIG. 1610 FLAT STRAINER - BOTTOM OUTLET GUTTER DRAIN

FUNCTION: Used in gutters where a drain is required for connecting to the downspout leader. Flashing arrangement design permits removal of dome or flat strainer without disturbing flashing clamp and gutter liner. Does not obstruct traffic.

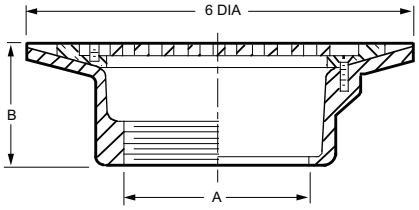

A OUTLET SIZE	B BODY HT.	FLANGE DIA	FREE AREA SQ IN	†DUCO CI RB TOP	ALL ROUGH BRZ (-BB)	APPROX. WEIGHT LBS
02, 03"	2"	6"	7	**536.00**	**889.00**	4
03"	*4"	6"	7	**1,017.00**	**1,368.00**	5
04"	4"	6"	7	**1,425.00**	**2,535.00**	6

REGULARLY FURNISHED: Duco Cast Iron Body with Bronze Flashing Clamp and Bronze Top Secured with Brass Screws.

OUTLET VARIATIONS (Specify type of outlet and pipe size in inches.)

Outlet Type	Outlet Designation Outlet Type/Pipe Size	ADD
Inside Caulk	C02	**N/C**
Threaded	T02, T03	**N/C**
Threaded	T04 (Available in 4" Deep Body Only)	**N/C**

OPTIONS:		ADD
-CP	Chrome Plated Grate	**293.00**
-G	Galvanized Cast Iron	**213.00**
-NB	Nickel Bronze Grate	**264.00**
-PB	Polished Bronze Grate	**156.00**
-SSM	SS Mesh on Grate	**150.00**
-U	Vandal Proof Grate	**70.00**
-WD02	2" High Water Dam on Collar	**481.00**

***For 4" deep body, specify B4 option when ordering.**

FIG. 1620 LOW DOME - BOTTOM OUTLET GUTTER DRAIN

FUNCTION: Used in gutters where a drain is required for connecting to the downspout leader. Flashing arrangement design permits removal of dome or flat strainer without disturbing flashing clamp and gutter liner. Intercepts debris and allows adequate drainage in gutters and valleys.

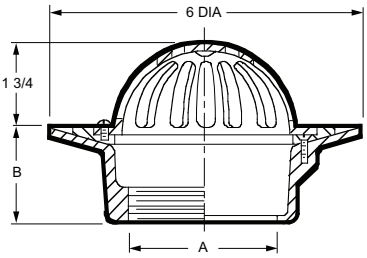

A OUTLET SIZE	B BODY HT.	FLANGE DIA	FREE AREA SQ IN	†DUCO CI RB TOP	ALL ROUGH BRZ (-BB)	APPROX. WEIGHT LBS
02, 03"	2"	6"	8	**536.00**	**889.00**	4
02, 03"	*4"	6"	8	**1,017.00**	**1,368.00**	5
04"	4"	6"	8	**1,425.00**	**2,535.00**	6

REGULARLY FURNISHED: Duco Cast Iron Body with Bronze Flashing Clamp and Bronze Top Secured with Brass Screws.

OUTLET VARIATIONS (Specify type of outlet and pipe size in inches.)

Outlet Type	Outlet Designation Outlet Type/Pipe Size	ADD
Inside Caulk	C02	**N/C**
Threaded	T02, T03	**N/C**
Threaded	T04 (Available in 4" Deep Body Only)	**N/C**

OPTIONS:		ADD
-CP	Chrome Plated Dome	**293.00**
-G	Galvanized Cast Iron	**213.00**
-NB	Nickel Bronze Dome	**264.00**
-PB	Polished Bronze Dome	**156.00**
-SSM	SS Mesh on Dome	**301.00**
-U	Vandal Proof Dome	**70.00**
-WD02	2" High Water Dam on Collar	**481.00**

***For 4" deep body, specify B4 option when ordering.**

FIG. 1630 HIGH DOME - BOTTOM OUTLET GUTTER DRAIN

FUNCTION: Used in gutters where a drain is required for connecting to the downspout leader. Flashing arrangement design permits removal of dome or flat strainer without disturbing flashing clamp and gutter liner. Used where an abnormal amount of debris is anticipated.

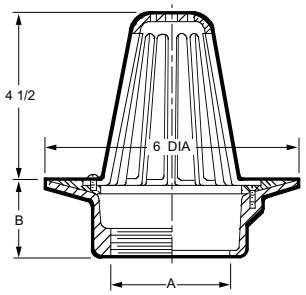

A OUTLET SIZE	B BODY HT.	FLANGE DIA	FREE AREA SQ IN	†DUCO CI RB TOP	ALL ROUGH BRZ (-BB)	APPROX. WEIGHT LBS
02, 03"	2"	6"	24.5	**640.00**	**993.00**	5
02, 03"	*4"	6"	24.5	**1,121.00**	**1,474.00**	6
04"	4"	6"	24.5	**1,531.00**	**2,641.00**	6

REGULARLY FURNISHED: Duco Cast Iron Body with Bronze Flashing Clamp and Bronze Top Secured with Brass Screws.

OUTLET VARIATIONS (Specify type of outlet and pipe size in inches.)

Outlet Type	Outlet Designation Outlet Type/Pipe Size	ADD
Inside Caulk	C02	**N/C**
Threaded	T02, T03	**N/C**
Threaded	T04 (Available in 4" Deep Body Only)	**N/C**

OPTIONS:		ADD
-CP	Chrome Plated Dome	**442.00**
-G	Galvanized Cast Iron	**213.00**
-NB	Nickel Bronze Dome	**409.00**
-PB	Polished Bronze Dome	**274.00**
-SSM	SS Mesh on Dome	**552.00**
-U	Vandal Proof Dome	**70.00**
-WD02	2" High Water Dam on Collar	**481.00**

***For 4" deep body, specify B4 option when ordering.**

†REGULARLY FURNISHED

FIG. 1640 FLAT STRAINER - 45° OUTLET GUTTER DRAIN

FUNCTION: Used in gutters where a drain is required for connecting to the downspout leader. Flashing arrangement design permits removal of dome or flat strainer without disturbing flashing clamp and gutter liner. Does not obstruct traffic.

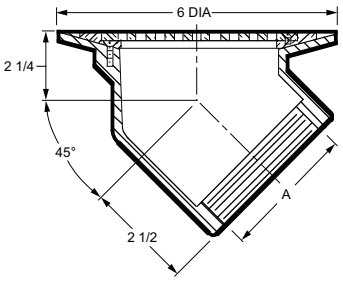

A OUTLET SIZE	FLANGE DIA	FREE AREA SQ IN	†DUCO CI RB TOP	ALL ROUGH BRZ (-BB)	APPROX. WEIGHT LBS
02"	6"	7	**683.00**	**1,118.00**	7
03"	6"	7	**924.00**	**1,669.00**	10
04"	6"	7	**924.00**	**1,669.00**	10

REGULARLY FURNISHED: Duco Cast Iron Body with Bronze Flashing Clamp and Bronze Top Secured with Brass Screws.

OUTLET VARIATIONS (Specify type of outlet and pipe size in inches.)

Outlet Type	Outlet Designation Outlet Type/Pipe Size	ADD
Threaded	T02, T03, T04	**N/C**

OPTIONS:		ADD
-CP	Chrome Plated Grate	**293.00**
-G	Galvanized Cast Iron	**213.00**
-NB	Nickel Bronze Grate	**264.00**
-PB	Polished Bronze Grate	**156.00**
-SSM	SS Mesh on Grate	**150.00**
-U	Vandal Proof Grate	**70.00**
-WD02	2" High Water Dam on Collar	**481.00**

FIG. 1650 LOW DOME - 45° OUTLET GUTTER DRAIN

FUNCTION: Used in gutters where a drain is required for connecting to the downspout leader. Flashing arrangement design permits removal of dome or flat strainer without disturbing flashing clamp and gutter liner. Intercepts debris and allows adequate drainage in gutters and valleys.

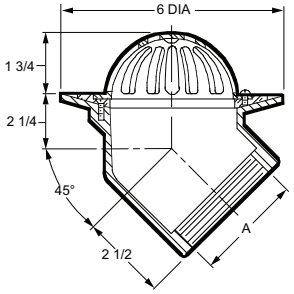

A OUTLET SIZE	FLANGE DIA	FREE AREA SQ IN	†DUCO CI RB TOP	ALL ROUGH BRZ (-BB)	APPROX. WEIGHT LBS
02"	6"	8	**683.00**	**1,118.00**	7
03"	6"	8	**924.00**	**1,669.00**	10
04"	6"	8	**924.00**	**1,669.00**	12

REGULARLY FURNISHED: Duco Cast Iron Body with Bronze Flashing Clamp and Bronze Top Secured with Brass Screws.

OUTLET VARIATIONS (Specify type of outlet and pipe size in inches.)

Outlet Type	Outlet Designation Outlet Type/Pipe Size	ADD
Threaded	T02, T03, T04	**N/C**

OPTIONS:		ADD
-CP	Chrome Plated Dome	**293.00**
-G	Galvanized Cast Iron	**213.00**
-NB	Nickel Bronze Dome	**264.00**
-PB	Polished Bronze Dome	**156.00**
-SSM	SS Mesh on Dome	**301.00**
-U	Vandal Proof Dome	**70.00**
-WD02	2" High Water Dam on Collar	**481.00**

FIG. 1660 HIGH DOME - 45° OUTLET GUTTER DRAIN

FUNCTION: Used in gutters where a drain is required for connecting to the downspout leader. Flashing arrangement design permits removal of dome or flat strainer without disturbing flashing clamp and gutter liner. Used where an abnormal amount of debris is anticipated.

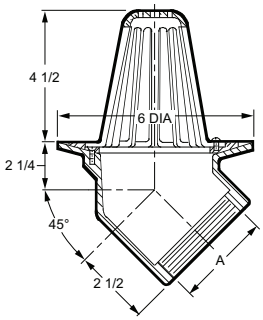

A OUTLET SIZE	FLANGE DIA	FREE AREA SQ IN	†DUCO CI RB TOP	ALL ROUGH BRZ (-BB)	APPROX. WEIGHT LBS
02"	6"	24.5	**783.00**	**1,218.00**	7
03"	6"	24.5	**1,142.00**	**1,887.00**	10
04"	6"	24.5	**1,142.00**	**1,887.00**	12

REGULARLY FURNISHED: Duco Cast Iron Body with Bronze Flashing Clamp and Bronze Top Secured with Brass Screws.

OUTLET VARIATIONS (Specify type of outlet and pipe size in inches.)

Outlet Type	Outlet Designation Outlet Type/Pipe Size	ADD
Threaded	T02, T03, T04	**N/C**

OPTIONS:		ADD
-CP	Chrome Plated Dome	**442.00**
-G	Galvanized Cast Iron	**213.00**
-NB	Nickel Bronze Dome	**409.00**
-PB	Polished Bronze Dome	**274.00**
-SSM	SS Mesh on Dome	**552.00**
-U	Vandal Proof Dome	**70.00**
-WD02	2" High Water Dam on Collar	**481.00**

†REGULARLY FURNISHED

FIG. 1670 FLAT STRAINER - SIDE OUTLET GUTTER DRAIN

FUNCTION: Used in gutters where a drain is required for connecting to the downspout leader. Flashing arrangement design permits removal of dome or flat strainer without disturbing flashing clamp and gutter liner. Does not obstruct traffic.

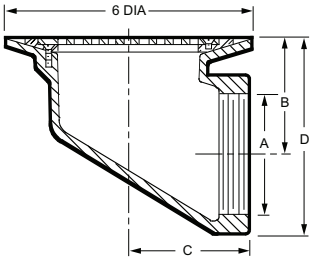

OUTLET VARIATIONS (Specify type of outlet and pipe size in inches.)

Outlet Type	Outlet Designation Outlet Type/Pipe Size	ADD
Threaded	T02, T03, T04	N/C

A OUTLET SIZE	B	C	D	FLANGE DIA	FREE AREA SQ IN	†DUCO CI RB TOP	ALL ROUGH BRZ (-BB)	APPROX. WEIGHT LBS
02"	2 1/2"	2 1/2"	4"	6"	7	**683.00**	**1,118.00**	7
03"	3"	3"	5"	6"	7	**924.00**	**1,669.00**	10
04"	3 1/2"	4"	6 1/4"	6"	7	**924.00**	**1,669.00**	12

OPTIONS:

		ADD
-CP	Chrome Plated Grate	**293.00**
-G	Galvanized Cast Iron	**213.00**
-NB	Nickel Bronze Grate	**264.00**
-PB	Polished Bronze Grate	**156.00**
-SSM	SS Mesh on Grate	**150.00**
-U	Vandal Proof Grate	**70.00**
-WD02	2" High Water Dam on Collar	**481.00**

REGULARLY FURNISHED: Duco Cast Iron Body with Bronze Flashing Clamp and Bronze Top Secured with Brass Screws.

FIG. 1680 LOW DOME - SIDE OUTLET GUTTER DRAIN

FUNCTION: Used in gutters where a drain is required for connecting to the downspout leader. Flashing arrangement design permits removal of dome or flat strainer without disturbing flashing clamp and gutter liner. Intercepts debris and allows adequate drainage in gutters and valleys.

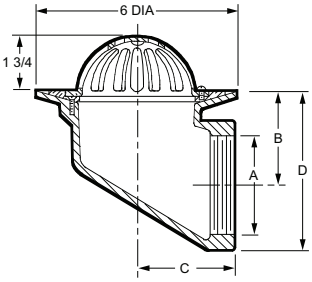

OUTLET VARIATIONS (Specify type of outlet and pipe size in inches.)

Outlet Type	Outlet Designation Outlet Type/Pipe Size	ADD
Threaded	T02, T03, T04	N/C

A OUTLET SIZE	B	C	D	FLANGE DIA	FREE AREA SQ IN	†DUCO CI RB TOP	ALL ROUGH BRZ (-BB)	APPROX. WEIGHT LBS
02"	2 1/2"	2 1/2"	4"	6"	8	**683.00**	**1,118.00**	7
03"	3"	3"	5"	6"	8	**924.00**	**1,669.00**	10
04"	3 1/2"	4"	6 1/4"	6"	8	**924.00**	**1,669.00**	12

OPTIONS:

		ADD
-CP	Chrome Plated Dome	**293.00**
-G	Galvanized Cast Iron	**213.00**
-NB	Nickel Bronze Dome	**264.00**
-PB	Polished Bronze Dome	**156.00**
-SSM	SS Mesh on Dome	**301.00**
-U	Vandal Proof Dome	**70.00**
-WD02	2" High Water Dam on Collar	**481.00**

REGULARLY FURNISHED:
Duco Cast Iron Body with Bronze Flashing Clamp and Bronze Top Secured with Brass Screws.

FIG. 1690 HIGH DOME - SIDE OUTLET GUTTER DRAIN

FUNCTION: Used in gutters where a drain is required for connecting to the downspout leader. Flashing arrangement design permits removal of dome or flat strainer without disturbing flashing clamp and gutter liner. Used where an abnormal amount of debris is anticipated.

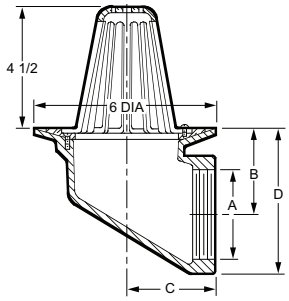

OUTLET VARIATIONS (Specify type of outlet and pipe size in inches.)

Outlet Type	Outlet Designation Outlet Type/Pipe Size	ADD
Threaded	T02, T03, T04	N/C

A OUTLET SIZE	B	C	D	FLANGE DIA	FREE AREA SQ IN	†DUCO CI RB TOP	ALL ROUGH BRZ (-BB)	APPROX. WEIGHT LBS
02"	2 1/2"	2 1/2"	4"	6"	24.5	**783.00**	**1,218.00**	7
03"	3"	3"	5"	6"	24.5	**1,142.00**	**1,887.00**	10
04"	3 1/2"	4"	6 1/4"	6"	24.5	**1,142.00**	**1,887.00**	10

OPTIONS:

		ADD
-CP	Chrome Plated Dome	**442.00**
-G	Galvanized Cast Iron	**213.00**
-NB	Nickel Bronze Dome	**409.00**
-PB	Polished Bronze Dome	**274.00**
-SSM	SS Mesh on Dome	**552.00**
-U	Vandal Proof Dome	**70.00**
-WD02	2" High Water Dam on Collar	**481.00**

REGULARLY FURNISHED: Duco Cast Iron Body with Bronze Flashing Clamp and Bronze Top Secured with Brass Screws.

†REGULARLY FURNISHED

FIG. 1710 ROOF ACCESSORY - EXPANSION JOINT

FUNCTION: Used with all types of **vertical** drainage conductors, leaders, stacks, vent or soil lines, where contraction and expansion movements must be compensated for to prevent rupturing of lines and damage to the building construction.

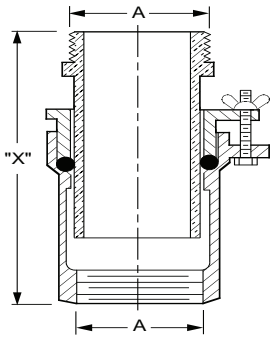

OUTLET VARIATIONS (Specify type of outlet and pipe size in inches.)

Outlet Type	Outlet Designation Outlet Type/Pipe Size	ADD
Spigot	S02, S03, S04, S05	**See Fig. 2646S**
	S06, S08	**See Fig. 2646S**
Threaded	T02, T03, T04, T05	**N/C**
	T06, T08	**N/C**
No-Hub	Y02, Y03, Y04, Y05	**See Fig. 2646Y for list add**
	Y06, Y08	**See Fig. 2646Y for list add**

REGULARLY FURNISHED: Duco Cast Iron Body with Adjustable Bronze Expansion Sleeve and Bronze Bolts and Wing Nuts.

*02" not available. [For 2" leaders, a 03" - 1710 will be provided with a 02" threaded connection in outlet of cast iron body.This requires using a 3" drain body.]

Must be installed in vertical installation only, in an accessible location preferably under the roof drain. Should be installed in an open space where the expansion sleeve can move freely. Never install encased in a slab, in soil or a similar substrate.

A OUTLET SIZE	"X" MIN	"X" MAX	†DUCO CI	GALV CI	APPROX. WEIGHT LBS
*02"	7 5/16"	9 3/4"	**849.00**	**1,078.00**	9
03"	7 11/16"	9 3/4"	**908.00**	**1,137.00**	10
04"	7 11/16"	9 3/4"	**1,029.00**	**1,258.00**	12
05"	8 3/4"	10 5/16"	**1,489.00**	**1,718.00**	18
06"	8 3/8"	10 1/4"	**1,711.00**	**1,940.00**	21
08"	8 5/8"	11 1/16"	**3,014.00**	**3,243.00**	40

FIG. 1720 ROOF ACCESSORY - STACK OR WALL SLEEVE

FUNCTION: Used as a watertight sleeve for piping which passes through concrete floors and walls. Sleeve has integral cast flashing flange for use in waterproof floors. After riser is passed through sleeve, a waterproof caulked joint is made at the top hub. This prevents any water leakage along the riser from one floor to another.

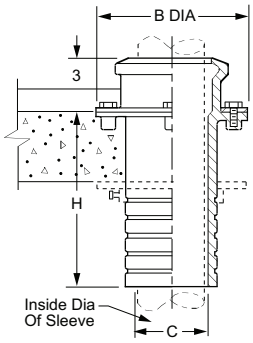

H= -5, -10 or -14"
(Specify Height)

OPTIONS: **ADD**

-C Underdeck Clamp
- 050 thru 06" **180.00**
- 08 thru 12" **339.00**

-G Galvanized Cast Iron **338.00**

PIPE SIZE	B DIA	C INSIDE DIA	†DUCO CI 5" HEIGHT	DUCO CI 10" HEIGHT	DUCO CI 14" HEIGHT	APPROX. WEIGHT LBS
050,075,01"	5	1 1/2	**415.00**	**905.00**	**1,192.00**	10
0125,0150,02"	6 3/4	2 3/4	**415.00**	**905.00**	**1,192.00**	10
0250,03"	7 1/2	3 3/4	**683.00**	**1,228.00**	**2,195.00**	12
04"	8 1/2	4 3/4	**683.00**	**1,228.00**	**2,195.00**	16
05"	9 1/2	5 3/4	**1,244.00**	**2,107.00**	**5,627.00**	24
06"	10 1/2	6 3/4	**1,244.00**	**2,107.00**	**5,627.00**	24
08"	13 1/2	9	**1,454.00**	**2,849.00**	**6,761.00**	29
10"	15 1/2	11 1/4	**1,514.00**	**4,015.00**	**8,344.00**	31
12"	19	13 1/4	**2,421.00**	**5,197.00**	**8,758.00**	40

REGULARLY FURNISHED: Duco Cast Iron Body with Flashing Clamp.

FIG. 1730 ROOF ACCESSORY - PARAPET SLEEVE

FUNCTION: Serves as scupper drain allowing drainage through parapet wall. Sleeve may be flashed at parapet wall and is held firmly in place by the adjustable wall flange.

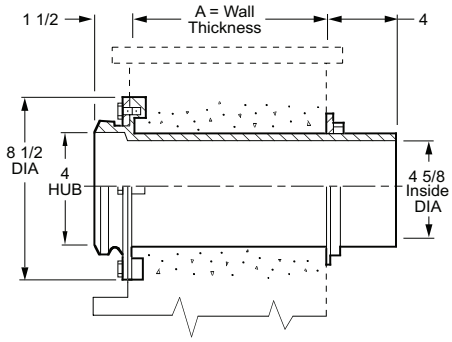

A WALL THICKNESS	HUB SIZE	†DUCO CI	GALV CI (-G)	APPROX. WEIGHT LBS
8 1/2" (0850)	04"	**1,204.00**	**1,505.00**	20
9 1/2" (0950)	04"	**1,204.00**	**1,505.00**	26
13 1/2" (1350)	04"	**1,369.00**	**1,670.00**	32
17 1/2" (1750)	04"	**1,688.00**	**1,989.00**	38
22 1/2" (2250)	04"	**1,807.00**	**2,108.00**	45

REGULARLY FURNISHED: Duco Cast Iron Body with Flashing Clamp and Adjustable Wall Flange.

†REGULARLY FURNISHED

FIG. 1740 ROOF ACCESSORY - CAULKING TYPE ROOF COUPLING

FUNCTION: Used as a counterflashing sleeve where roofing membranes are terminated at the stack, which protrudes through the roof. Caulk joint is made between upper hub of sleeve and stack, effectively waterproofing the entire assembly.

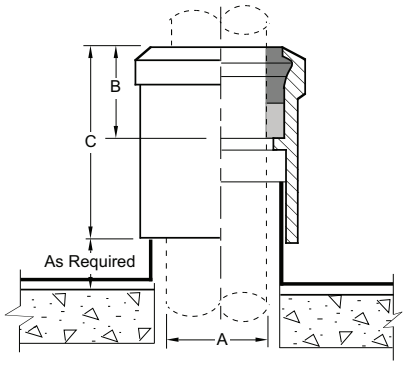

A SIZE	B	C	†DUCO CI	GALV CI (-G)	APPROX. WEIGHT LBS
02"	1 3/4"	3 1/2"	**76.00**	**176.00**	2
03"	1 3/4"	3 3/4"	**139.00**	**239.00**	4
04"	1 3/4"	3 3/4"	**158.00**	**258.00**	5
05"	1 3/4"	3 3/4"	**206.00**	**306.00**	6
06"	1 3/4"	3 3/4"	**409.00**	**509.00**	7
08"	2 1/4"	4 1/4"	**847.00**	**947.00**	9

REGULARLY FURNISHED: Duco Cast Iron.

FIG. 1748 ROOF ACCESSORY - VENT CAP

FUNCTION: Recommended for all plumbing vents which terminate above the roof level. Unique vandal proof design eliminates the possibility of sticks or other materials being either carelessly or maliciously placed in the vent openings, thus causing stoppage of the drainage system.

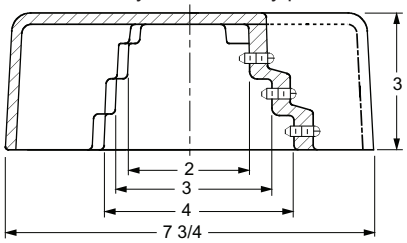

Pipe Size = 0150, 02, 03 & 04

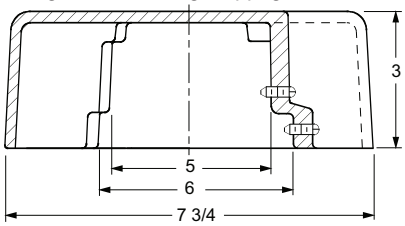

Pipe Size = 05 & 06

REGULARLY FURNISHED: Duco Cast Iron Dome Secured with Recessed Allen Socket Set Screws.

PIPE SIZE	†DUCO CI	GALV CI (-G)	APPROX. WEIGHT LBS
0150, 02"	**536.00**	**751.00**	15
03"	**607.00**	**822.00**	15
04"	**675.00**	**890.00**	15
05"	**794.00**	**1,009.00**	22
06"	**863.00**	**1,078.00**	22

FIG. 1750 ROOF ACCESSORY - THREADED TYPE ROOF COUPLING

FUNCTION: Used as a counterflashing sleeve where the roofing membranes are terminated at the stack which passes through the roof. Sleeve is threaded so that stack may be extended to the desired height.

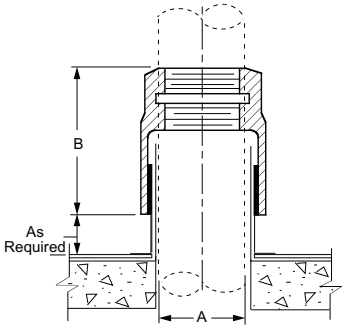

REGULARLY FURNISHED: Duco Cast Iron.

A SIZE	B	†DUCO CI	GALV CI (-G)	APPROX. WEIGHT LBS
0125"	5"	**246.00**	**483.00**	5
0150"	4"	**POA**	**POA**	5
02"	4"	**246.00**	**483.00**	5
0250"	4 3/4"	**POA**	**POA**	7
03"	4 1/2"	**282.00**	**519.00**	7
04"	4 1/2"	**365.00**	**602.00**	8
05"	5 1/2"	**524.00**	**761.00**	11
06"	5 1/2"	**524.00**	**761.00**	11
08"	6 1/2"	**1,302.00**	**1,624.00**	20
10"	6 1/2"	**2,252.00**	**2,855.00**	38

FIG. 1760 ROOF ACCESSORY - RISER SLEEVE ADAPTOR

FUNCTION: Used as an adaptor type riser sleeve. Length of sleeve may be extended by inserting pipe nipples in either end of sleeve. Integral flashing flange is provided for use in waterproofed floors.

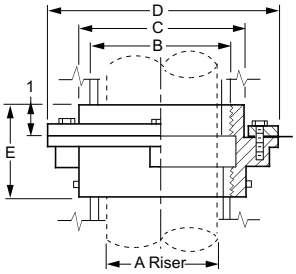

A RISER	B SIZE	C DIA	D DIA	E	†DUCO CI	GALV CI (-G)	APPROX. WEIGHT LBS
0150"	2 1/2"	4"	6 1/2"	3"	**540.00**	**863.00**	12
02"	3"	4"	6 1/2"	3"	**566.00**	**889.00**	14
0250, 03"	4"	5"	7 1/4"	3"	**566.00**	**889.00**	16
04"	5"	6 1/2"	9 1/4"	3 1/2"	**788.00**	**1,111.00**	18
05"	6"	7 1/2"	10 1/4"	3 3/4"	**811.00**	**1,134.00**	21
06"	8"	10"	13 1/4"	4"	**1,142.00**	**1,465.00**	31

REGULARLY FURNISHED: Duco Cast Iron Body with Flashing Clamp.

FIG. 1770 ROOF ACCESSORY - DOWNSPOUT NOZZLE

FUNCTION: Used as a parapet overflow or at the base of a wall where a concealed leader discharges rainwater to ground. Nozzle design diverts water away from building, eliminating wall stains. Wall flange covers rough opening and serves as anchor.

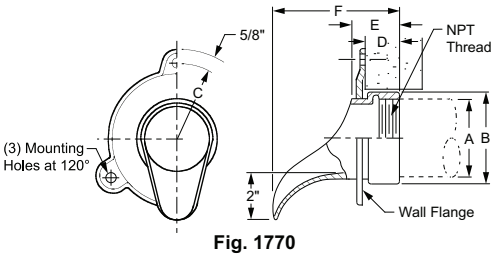

Fig. 1770

OPTIONS: **ADD**
-BS Bird Screen **705.00**

REGULARLY FURNISHED: Cast Bronze Nozzle and Flange.

A SIZE	B SIZE	C RAD	D	E	F	†ROUGH BRONZE	NB	PB	CP	APPROX. WEIGHT LBS
02"(Thrd)	2 3/4"	2 3/4"	1 3/8"	2 1/16"	5 5/8"	**808.00**	**1,392.00**	**1,254.00**	**1,532.00**	9
02"(No-Hub)	2 3/4"	2 3/4"	1 3/8"	2 1/16"	5 5/8"	**808.00**	**-**	**1,254.00**	**1,532.00**	9
03"(Thrd)	4"	3 1/2"	1 3/8"	2 1/16"	5 5/8"	**808.00**	**1,392.00**	**1,254.00**	**1,532.00**	9
03"(No-Hub)	4"	3 1/2"	1 3/8"	2 1/16"	5 5/8"	**808.00**	**-**	**1,254.00**	**1,532.00**	9
04"(Thrd)	5"	3 7/8"	1 3/8"	2 1/16"	5 5/8"	**808.00**	**1,392.00**	**1,254.00**	**1,532.00**	9
04"(No-Hub)	5"	3 7/8"	1 3/8"	2 1/16"	5 5/8"	**808.00**	**-**	**1,254.00**	**1,532.00**	9
05"(Thrd)	6"	4 3/8"	1 3/8"	2 1/16"	5 5/8"	**1,914.00**	**2,496.00**	**2,249.00**	**2,753.00**	16
06"(Thrd)	7 1/4"	5"	1 3/8"	2 1/16"	5 5/8"	**1,914.00**	**2,496.00**	**2,249.00**	**2,753.00**	16
06"(No-Hub)	7 1/4"	5"	1 3/16"	2 1/2"	6 1/4"	**1,914.00**	**-**	**2,249.00**	**2,753.00**	16
08"(Thrd)	9 1/4"	5 7/8"	1 5/8"	2 3/8"	5 15/16"	**2,907.00**	**3,415.00**	**3,293.00**	**3,763.00**	23
10"(Thrd)	11 1/8"	7 1/4"	1 3/4"	2 3/4"	5 3/8"	**3,776.00**	**4,456.00**	**4,272.00**	**4,910.00**	28
12"(Thrd)	13 1/4"	8"	2	2 15/16"	7 9/16"	**4,750.00**	**5,517.00**	**5,290.00**	**6,079.00**	33

A SIZE	B SIZE	C RAD	D	E	F	†ROUGH BRONZE	NB	PB	CP	APPROX. WEIGHT LBS
**02"(No-Hub)	2 3/4"	2 3/4"	1 3/8"	2 1/16"	5 5/8"	-	**1,516.00**	-	-	9
**03"(No-Hub)	4"	3 1/2"	1 3/8"	2 1/16"	5 5/8"	-	**1,569.00**	-	-	9
**04"(No-Hub)	5"	3 7/8"	1 3/8"	2 1/16"	5 5/8"	-	**1,674.00**	-	-	9
**05"(No-Hub)	6"	4 3/8"	1 3/8"	2 1/16"	5 5/8"	**2,601.00**	**3,183.00**	**2,936.00**	**3,440.00**	16
**06"(No-Hub)	7 1/4"	5"	1 3/16"	2 1/2"	6 1/4"	-	**3,349.00**	-	-	16
**08"(No-Hub)	9 1/4"	5 7/8"	1 5/8"	2 3/8"	5 15/16"	**3,863.00**	**4,371.00**	**4,249.00**	**4,719.00**	23
**10"(No-Hub)	11 1/8"	7 1/4"	1 3/4"	2 3/4"	5 3/8"	**4,916.00**	**5,596.00**	**5,412.00**	**6,050.00**	28
**12"(No-Hub)	13 1/4"	8"	2	2 15/16"	7 9/16"	**6,173.00**	**6,940.00**	**6,713.00**	**7,502.00**	33

** A 2646Y adaptor is regularly furnished.

FIG. 1771 ROOF ACCESSORY - DOWNSPOUT NOZZLE

FUNCTION: Used as a parapet overflow or at the base of a wall where a concealed leader discharges rainwater to ground. Nozzle design diverts water away from building, eliminating wall stains. Wall flange covers rough opening and serves as anchor.

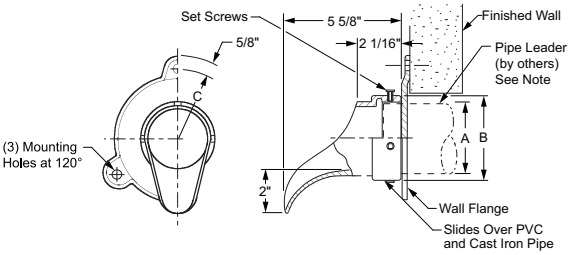

OPTIONS: **ADD**
-BS Bird Screen **705.00**

NOTE: Pipe (Leader) must extend past the face of the finished wall in order to install the wall flange and attach the downspout nozzle. Dimension shall be field determined by installer.

REGULARLY FURNISHED: Cast Bronze Nozzle and Flange, Machined Nozzle Slides Over PVC and Cast Iron Pipe.

A PIPE SIZE	B SIZE	C RAD	†ROUGH BRONZE	NB	PB	APPROX. WEIGHT LBS
02"	2 3/4"	2 3/4"	**808.00**	**1,392.00**	**1,254.00**	9
03"	4"	3 1/2"	**808.00**	**1,392.00**	**1,254.00**	9
04"	5"	3 7/8"	**808.00**	**1,392.00**	**1,254.00**	9
05"	6"	4 3/8"	**1,914.00**	**2,496.00**	**2,249.00**	16
06	7 1/4"	5"	**1,914.00**	**2,496.00**	**2,249.00**	16
08"	9 1/4"	5 7/8"	**2,907.00**	**3,415.00**	**3,293.00**	23
10"	11 1/8"	7 1/4"	**3,776.00**	**4,456.00**	**4,272.00**	28
12"	13 1/4"	8"	**4,750.00**	**5,517.00**	**5,290.00**	33

†REGULARLY FURNISHED

FIG. 1775 SPECIAL PURPOSE DOWNSPOUT COVER W/HINGED PERFORATED COVER

FUNCTION: Used as a downspout cover on a wall where an overflow roof drain concealed leader discharges rainwater to the ground.

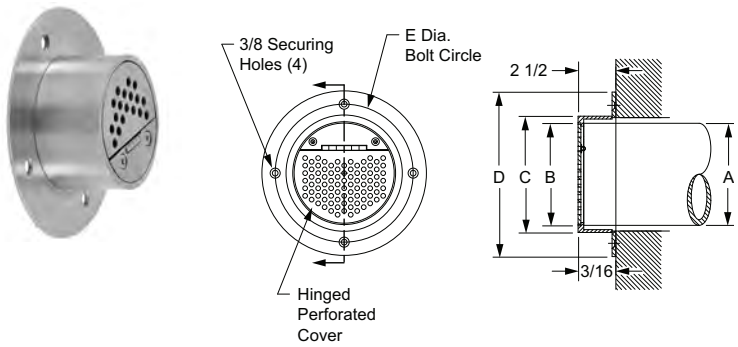

Fig. 1775

OPTIONS: **ADD**

-U Vandal Proof **195.00**
-H5 5" Long Downspout Frame ..... **N/C**

A PIPE SIZE	B DIA	C DIA	D DIA	E DIA	†SS	CP	PB
0150	3 1/2"	4 1/2"	7 11/16"	6"	**3,743.00**	**4,405.00**	**4,119.00**
02	3 1/2"	4 1/2"	7 11/16"	6"	**3,743.00**	**4,405.00**	**4,119.00**
03	3 1/2"	4 1/2"	7 11/16"	6"	**3,743.00**	**4,405.00**	**4,119.00**
04	4 9/16"	5 9/16"	8 3/4"	7 1/8"	**3,743.00**	**4,405.00**	**4,119.00**
05	5 5/8"	6 5/8"	9 13/16"	8 1/4"	**3,951.00**	**4,613.00**	**4,345.00**
06	6 11/16"	7 11/16"	10 7/8"	9"	**3,951.00**	**4,613.00**	**4,345.00**
08	8 11/16"	9 11/16"	12 7/8"	11 1/4"	**4,141.00**	**4,803.00**	**4,555.00**
10	10 13/16"	11 13/16"	15"	13 1/2"	**4,380.00**	**5,042.00**	**4,820.00**
12	12 13/16"	13 13/16"	17"	15 1/2"	**4,649.00**	**5,311.00**	**5,114.00**
15	16"	16 15/16"	20 1/8"	18 1/2"	**4,912.00**	**5,574.00**	**5,403.00**
16	16"	16 15/16"	20 1/8"	18 1/2"	**5,041.00**	**5,703.00**	**5,546.00**

REGULARLY FURNISHED: Fabricated Type 304 Stainless Steel Downspout Cover with Hinged Perforated Cover.

FIG. 1785, 1786, 1787 ROOF ACCESSORY - DOWNSPOUT BOOTS

FUNCTION: Used as a transition piece for connecting sheet metal exposed downspout to underground cast iron soil piping. Sturdy cast iron construction provides the necessary protection of the lower part of the exposed downspout from damage.

Fig. 1785

Fig. 1787

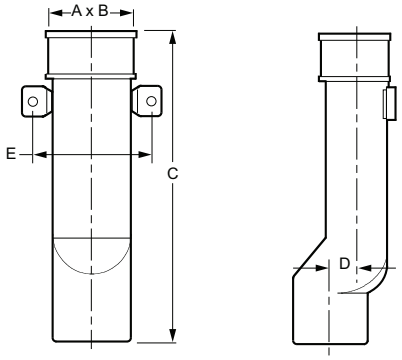

OPTIONS: **ADD**

-G Galvanized Cast Iron 1785 ..... **675.00**
-G Galvanized Cast Iron 1786, 1787 ..... **1,248.00**

FIG. NO.	A X B SIZE	C LENGTH	D	E	CAST IRON	APPROX. WEIGHT LBS
1785-12	04 X 03" RECT.	12"	1 1/2"	6 5/8"	**811.00**	16
*1785-12CA	04 X 03" RECT.	12"	1 1/2"	6 5/8"	**1,709.00**	16
1785-18	04 X 03" RECT.	18"	1 1/2"	6 5/8"	**1,059.00**	22
*1785-18CA	04 X 03" RECT.	18"	1 1/2"	6 5/8"	**1,956.00**	22
1785-24	04 X 03" RECT.	24"	1 1/2"	6 5/8"	**1,891.00**	28
*1785-24CA	04 X 03" RECT.	24"	1 1/2"	6 5/8"	**2,787.00**	28
1786-24	05 X 04" RECT.	24"	1"	7 5/8"	**1,689.00**	37
*1786-24CA	05 X 04" RECT.	24"	1"	7 5/8"	**2,590.00**	37
1786-36	05 X 04" RECT.	36"	1"	7 5/8"	**2,625.00**	37
1787-18	04" ROUND	18"	1"	6 1/8"	**1,171.00**	26
*1787-18CA	04" ROUND	18"	1"	6 1/8"	**2,068.00**	26

*With cleanout access.

REGULARLY FURNISHED: Cast Iron Body and Strap with 5/16" Dia. Cast Holes for Flat Head Bolts, Typical. All Shapes Unpainted.

†REGULARLY FURNISHED

FIG. 1800 ROOF DRAIN AND OVERFLOW DRAIN WITH DECK TOP MOUNTING PLATE

FUNCTION: Used on flat roofs of any construction (other than poured in place) where an emergency overflow drain can be used in combination with a standard roof drain. Large sump drain bodies with low profile domes provide sufficient free area for quick drainage of rainwater while protecting the drain sump and connected piping from the intrusion of debris. Internal standpipe type overflow drain receives water only when the build-up is greater than the setting of the standpipe. Water dam standpipe can be cut to achieve various water depths on the roof. Attached wide dual drain deck plate with securing holes enables both drains to be secured to the roof deck from the top surface of the roof reducing installation time, reducing the number of roof penetrations and eliminating the need for an underdeck clamp. The wide dual deck plate also recesses the drains slightly to prevent water build-up at the base of the drains.

OUTLET VARIATIONS (Specify type of outlet and pipe size in inches.)

Outlet Type	Outlet Designation Outlet Type/Pipe Size	"B" Body HT. DIM.	ADD
Inside Caulk	C02, C03, C04, C05, C06	5"	**N/C**
Speedi-Set SW	L02, L03, L04	5"	**N/C**
Speedi-Set XH	LXH02, LXH03, LXH04	5"	**N/C**
Threaded	T02, T03, T04, T05, T06	3 3/4"	**199.00**
No-Hub	Y02, Y03, Y04, Y05, Y06	5"	**N/C**

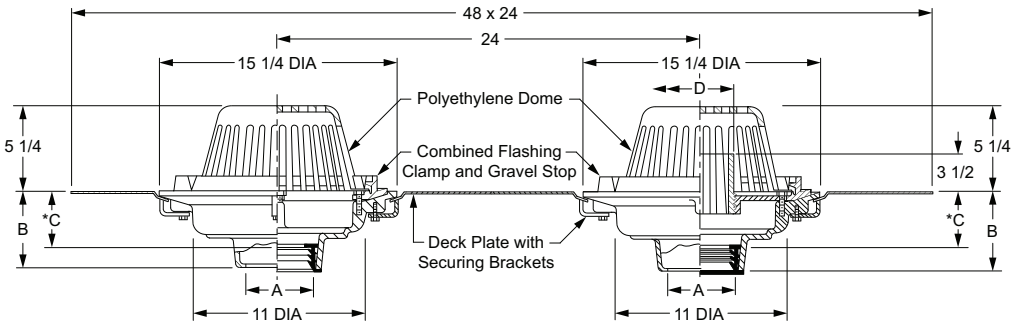

*Note: This dimension to internal stop of Speedi-Set gasket

A OUTLET SIZE	*C DIA.	D STANDPIPE SIZE	FREE AREA SQ. IN.	†DUCO CI POLY DOME
02, 03, 04"	3 3/4"	4"	102.5	**3,195.00**
05, 06"	3 3/4"	6"	102.5	**3,966.00**

REGULARLY FURNISHED: Duco cast iron bodies with combined flashing clamp and gravel stop for roof drain and combined flashing clamp for gravel stop with 3 1/2" high internal water dam standpipe for overflow drain. Deck plate with securing holes provided to receive both drains. Both drains provided with polyethylene domes.

OPTIONS:		ADD
-AD	Aluminum Dome	**628.00**
-AE	Adjustable Extension	**1,810.00**
-C2	Secondary Flashing Clamp (Requires Extension)	**476.00**
-CID	Cast Iron Domes	**542.00**
-CIDG	Cast Iron Domes **with** Galvanizing	**1,460.00**
-CID8	8" High Cast Iron Dome	**1,178.00**
-E	Extension up to 4"	**1,698.00**
	per inch over 4"	**404.00**
-G	Galvanized Cast Iron Body	**2,458.00**
-PDSSM	SS Mesh on Poly Dome	**1,284.00**
-RBD	Rough Bronze Dome	**2,126.00**
-RBDSSM	Rough Bronze Dome w/SS Mesh	**3,410.00**
-SSM	SS Mesh on Metal Domes	**1,284.00**
-U	Vandal Proof Dome	**316.00**
-WD02	External Water Dam in Lieu of Internal	**N/C**

†REGULARLY FURNISHED

FIG. 1830 ROOF DRAIN AND OVERFLOW DRAIN W/DECK TOP MOUNTING PLATE

FUNCTION: Used on flat roofs of any construction other than poured in place where an emergency overflow drain can be used in combination with a primary roof drain. The small diameter drain bodies with low profile domes provide sufficient free area for quick drainage of rainwater while protecting the drain sump and connecting pipe from the intrusion of debris. The external water dam collar on the overflow drain receives water only when the build-up is greater than the collar. The attached dual drain roof deck plate with securing holes enables both drains to be secured to the roof deck from the top of roof reducing the installation time, the number of penetrations and eliminating the need for an underdeck clamp.

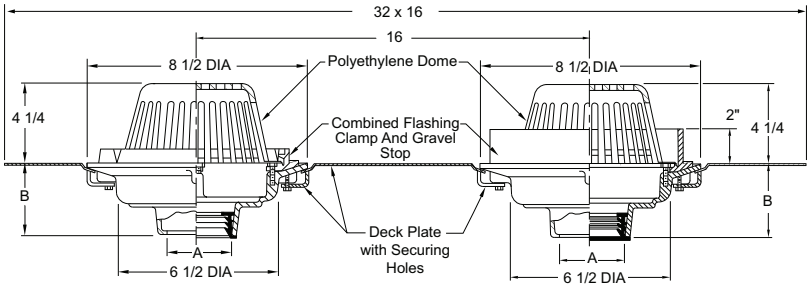

OUTLET VARIATIONS (Specify type of outlet and pipe size in inches.)

Outlet Type	Outlet Designation Outlet Type/Pipe Size	"B" Body HT. DIM.	ADD
Inside Caulk	C02, C03, C04	5 1/2"	**N/C**
Speedi-Set SW	L02, L03, L04	5 1/2"	**N/C**
Speedi-Set XH	LXH02, LXH03, LXH04	5 1/2"	**N/C**
Threaded	T02, T03, T04	4 1/4"	**199.00**
No-Hub	Y02, Y03, Y04	5 1/2"	**N/C**

OPTIONS:		ADD
-AD	Aluminum Dome	**460.00**
-C2	Secondary Flashing Clamp (Requires Extension)	**476.00**
-C2E04P	Sec. Flashing Clamp w/4" Perf SS Extension	**1,662.00**
-CID	Cast Iron Domes	**244.00**
-CIDG	Cast Iron Domes **w/Galvanizing**	**614.00**
-E	Ext, to 4" Per Inch, CI	**216.00**
-G	Galvanized CI	**503.00**
-RBD	Rough Bronze Dome	**870.00**
-SSM	SS Mesh on Metal Dome	**896.00**
-U	Vandal Proof Dome	**294.00**

A OUTLET SIZE	FLANGE DIA.	FREE AREA SQ IN	†DUCO CI POLY DOME	APPROX. WEIGHT LBS
02, 03, 04"	8 1/2"	41.5	**2,244.00**	**30**

REGULARLY FURNISHED: Duco Cast Iron Body, Double Deck Plate with Securing Holes, Combined Flashing Clamp and Gravel Stop for Roof Drain and External Water Dam for Overflow Drain, both with Polyethylene Dome.

FIG. 1850 ROOF DRAIN AND OVERFLOW DRAIN WITH DECK TOP MOUNTING PLATE

FUNCTION: Used on flat roofs of any construction other than poured in place where an emergency overflow drain can be used in combination with a primary roof drain. The medium diameter drain bodies with low profile domes provide sufficient free area for quick drainage of rainwater while protecting the drain sump and connecting pipe from the intrusion of debris. The external water dam collar on the overflow drain receives water only when the build-up is greater than the collar. The attached dual drain roof deck plate with securing holes enables both drains to be secured to the roof deck from the top of roof reducing the installation time, the number of penetrations and eliminating the need for an underdeck clamp.

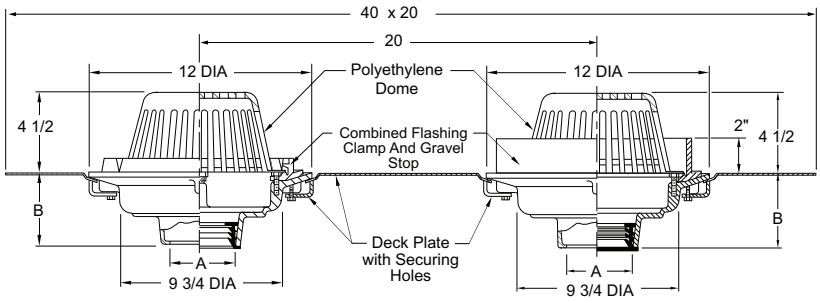

OUTLET VARIATIONS (Specify type of outlet and pipe size in inches.)

Outlet Type	Outlet Designation Outlet Type/Pipe Size	"B" Body HT. DIM.	ADD
Inside Caulk	C02, C03, C04, C05, C06	6"	**N/C**
Speedi-Set SW	L02, L03, L04	6"	**N/C**
Speedi-Set XH	LXH02, LXH03, LXH04	6"	**N/C**
Threaded	T02, T03, T04, T05, T06	4 3/4"	**199.00**
No-Hub	Y02, Y03, Y04, Y05, Y06	6"	**N/C**

OPTIONS:		ADD
-AD	Aluminum Dome	**460.00**
-C2	Secondary Flashing Clamp (Requires Extension)	**476.00**
-C2E04P	Secondary Flashing Clamp w/4" Perf SS Extension	**2,098.00**
-CID	Cast Iron Domes	**404.00**
-CIDG	Cast Iron Domes **w/Galvanizing**	**1,334.00**
-E	Ext, to 4" Per Inch, CI	**216.00**
-G	Galvanized CI	**1,014.00**
-RBD	Rough Bronze Dome	**1,048.00**
-SSM	SS Mesh on Metal Dome	**1,186.00**
-U	Vandal Proof Dome	**294.00**

A OUTLET SIZE	FLANGE DIA.	FREE AREA SQ IN	†DUCO CI POLY DOME	APPROX. WEIGHT LBS
02, 03, 04"	12"	71.5	**2,498.00**	27
05, 06"	12"	71.5	**2,498.00**	27

REGULARLY FURNISHED: Duco Cast Iron Body, Double Deck Plate with Securing Holes, Combined Flashing Clamp and Gravel Stop for Roof Drain and External Water Dam for Overflow Drain, both with Polyethylene Dome.

†REGULARLY FURNISHED

FIG. 1900 15 1/4" DIAMETER - AREA DRAIN WITH PERFORATED STANDPIPE

Outlet Size	†Duco CI
02, 03, 04	POA
05, 06	POA
08	POA

C Caulk Outlet.....POA
Y No-Hub Outlet.....POA
T Threaded Outlet.....POA

ADD FOR:
-C Underdeck Clamp.....POA
-R Sump Receiver.....POA
Gravel Guard & Standpipe Per 1" .....POA

FIG. 1901 15 1/4" DIAMETER - PLANTER DRAIN AND OVERFLOW STANDPIPE

Outlet Size	†Duco CI
02, 03, 04	POA
05, 06	POA
08	POA

C Caulk Outlet .....POA
Y No-Hub Outlet.....POA
T Threaded Outlet .....POA

ADD FOR:
-AE Adjustable Extension .....POA
-BZS Bronze Standpipe.....POA
-C Underdeck Clamp .....POA
-CIS Cast Iron Standpipe.....POA
-R Sump Receiver .....POA
-U Vandal Proof Screws .....POA
Gravel Guard & Standpipe Per 1" .....POA

FIG. 1902 LOW PROFILE PERFORATED DOME WITH REMOVABLE LID

Outlet Size	†Duco CI
02, 03, 04	POA

C Caulk Outlet .....POA
Y No-Hub Outlet.....POA
T Threaded Outlet .....POA

ADD FOR:
-C Underdeck Clamp .....POA
Per 1" over E05.....POA
-G Galvanized Cast Iron Body & Collar.....POA
-R Sump Receiver .....POA
-U Vandal Proof .....POA

FIG. 1905 MULTI-LEVEL PLANTER DRAIN AND PERFORATED STANDPIPE

Outlet Size	†Duco CI
02, 03, 04	POA
05, 06	POA

C Caulk Outlet .....POA
Y No-Hub Outlet.....POA

ADD FOR:
-C Underdeck Clamp .....POA
-R Sump Receiver .....POA

FIG. 1906 PLANTING AREA DRAIN

Outlet Size	†Duco CI
02, 03, 04	POA

C Caulk Outlet .....POA
Y No-Hub Outlet.....POA

ADD FOR:
-C Underdeck Clamp .....POA
-G Galvanized Cast Iron Body & Collar.....POA
-R Sump Receiver .....POA

FOR INFORMATION ON POA ITEMS, PLEASE CONTACT
YOUR LOCAL JAY R. SMITH REPRESENTATIVE

FIG. 1909 PLANTER AREA DRAIN FOR MULTI-LEVELS

Outlet Size	†Duco CI
02, 03, 04	POA
05, 06	POA

C Caulk Outlet .....POA
Y No-Hub Outlet.....POA

ADD FOR:
-C Underdeck Clamp .....POA
-R Sump Receiver .....POA

FIG. 1910 ROOF DRAIN WITH STANDPIPE-LARGE AREA PLANTER TYPE

Outlet Size	†Duco CI
02, 03, 04	POA
05, 06	POA

C Caulk Outlet .....POA
Y No-Hub Outlet.....POA

ADD FOR:
-C Underdeck Clamp .....POA
-R Sump Receiver .....POA

FIG. 1913 PLANTER DRAIN

Outlet Size	†Duco CI
02, 03, 04	POA
05, 06	POA

C Caulk Outlet.....POA
Y No-Hub Outlet .....POA
T Threaded Outlet.....POA

ADD FOR:
-C Underdeck Clamp .....POA
-R Sump Receiver .....POA

Note: Specify bottom and side outlet size when ordering.
ex: 1913C02-02

FIG. 1915 PLAZA AND PLANTER DRAIN FOR NON-PEDESTRIAN TRAFFIC

Outlet Size	†Duco CI
02, 03, 04	POA
05, 06	POA

C Caulk Outlet .....POA
Y No-Hub Outlet.....POA
T Threaded Outlet .....POA

ADD FOR:
-C Underdeck Clamp .....POA
-R Sump Receiver .....POA

FIG. 1920 PLAZA AND PLANTER DRAIN FOR PEDESTRIAN TRAFFIC

Outlet Size	†Duco CI
02, 03, 04	POA
05, 06	POA

C Caulk Outlet .....POA
Y No-Hub Outlet.....POA

ADD FOR:
-C Underdeck Clamp .....POA
-R Sump Receiver .....POA

FIG. 1930 PLANTER AREA DRAIN

Outlet Size	†Duco CI
02, 03, 04	POA
05, 06	POA

C Caulk Outlet .....POA
Y No-Hub Outlet.....POA

ADD FOR:
-C Underdeck Clamp .....POA
-R Sump Receiver .....POA

FIG. 1935 20" DIAMETER - PLANTER AREA OVERFLOW DRAIN

Outlet Size	†Duco CI
02, 03, 04	POA
05, 06	POA

C Caulk Outlet .....POA
Y No-Hub Outlet.....POA

ADD FOR:
-AD Aluminum Dome .....POA
-AE Adjustable Extension .....POA
-C Underdeck Clamp .....POA
-CID Cast Iron Dome .....POA
-CIS Cast Iron Standpipe .....POA
-R Sump Receiver .....POA
-U Vandal Proof Screws .....POA

FIG. 1936 PLANTING AREA DRAIN

Outlet Size	†Duco CI
02, 03, 04	POA

C Caulk Outlet .....POA
Y No-Hub Outlet.....POA

ADD FOR:
-C Underdeck Clamp .....POA
-R Sump Receiver .....POA
-U Vandal Proof Screws .....POA

FIG. 1937 LOW PROFILE PERFORATED DOME COVER WITH REMOVABLE LID

Outlet Size	†Duco CI
02, 03, 04	POA
05, 06	POA

C Caulk Outlet .....POA
Y No-Hub Outlet.....POA

ADD FOR:
-C Underdeck Clamp .....POA
-CID Cast Iron Dome .....POA
Extension Per 1" over E06 .....POA
-R Sump Receiver .....POA
-RDP Roof Deck Plate.....POA
-SSM SS Mesh on Dome .....POA
-U Vandal Proof .....POA
-WD2 2" Internal Water Dam Standpipe .....POA

FIG. 1940 8 1/2" DIAMETER PLANTER DRAIN WITH LOW PROFILE DOME

Outlet Size	†Duco CI
02, 03, 04	POA

C Caulk Outlet .....POA
Y No-Hub Outlet.....POA

ADD FOR:
-AD Aluminum Dome .....POA
-C Underdeck Clamp .....POA
-CIDG Cast Iron Dome **w/Galvanizing** .....POA
-CL "L" Shaped Underdeck Clamp .....POA
-G Galvanized Cast Iron Body & Collar.....POA
-R Sump Receiver .....POA
-RBD Rough Bronze Dome .....POA
-U Vandal Proof Screws .....POA

FIG. 1950 8 1/2" DIAMETER SIDE OUTLET PLANTER DRAIN WITH LOW PROFILE DOME

Outlet Size	†Duco CI
02, 03, 04	POA

C Caulk Outlet .....POA
Y No-Hub Outlet.....POA

ADD FOR:
-AD Aluminum Dome .....POA
-C Underdeck Clamp .....POA
-CIDG Cast Iron Dome **w/Galvanizing** .....POA
-CL "L" Shaped Underdeck Clamp .....POA
-G Galvanized Cast Iron Body & Collar.....POA
-R Sump Receiver .....POA
-RBD Rough Bronze Dome .....POA
-U Vandal Proof Screws .....POA

FLOOR DRAINS

Fig. 2005 (A-Round)

Fig. 2005 (B-Square)

Fig. 2010 (A-Round)

Fig. 2010 (B-Square)

Fig. DX2010 (A-Round)

Fig. DX2010 (B-Square)

Fig. 2015 (A-Round)

Fig. 2016

Fig. 2020 (A-Round)

Fig. 2030 (A-Round)

Fig. 2038

Photo not available
Fig. 2039

Fig. 2040 (A-Round)

Photo not available
Fig. 2050

Photo not available
Fig. 2051

Fig. 2110

Fig. 2115

Fig. 2120

Fig. 2125

Fig. 2130

Fig. 2135

Fig. 2140

Fig. 2142

Fig. 2143

Fig. 2145

Fig. 2147

Fig. 2210

Fig. 2215

Fig. 2220

Fig. 2225

Fig. 2230

Fig. 2233

Fig. 2235

Fig. 2238

Fig. 2240

Fig. 2242

Fig. 2245

Fig. 2247

Fig. 2250

Fig. 2255

FLOOR DRAINS

Fig. 2270

Fig. 2275

Fig. 2280

Fig. 2285

Photo not available
Fig. 2295

Fig. 2310

Fig. 2315

Fig. DX2312

Fig. 2320

Fig. 2325

Fig. 2330

Fig. 2335

Fig. 2340

Fig. 2345

Fig. 2350

Fig. 2355

Fig. 2360

Fig. 2365

Fig. 2410

Fig. 2420

Fig. 2450

Fig. 2455

Fig. 2470

Fig. 2475

Fig. 2484

Fig. 2488

Fig. 2490

Fig. 2495

Fig. 2500

Fig. 2505

Fig. 2508

Fig. 2510

Fig. 2515

Fig. 2530

Fig. DX2565

Fig. DX2566

FLOOR DRAINS

Fig. DX2568

Fig. 2570

Fig. 2585

Fig. 2589

Fig. 2614

Fig. 2624

Fig. 2630

Fig. 2640

Fig. 2641

Fig. 2643

Fig. 2645

Fig. 2646

Fig. 2646Y

Fig. 2650

Fig. 2651

Fig. 2652

Fig. 2670

Fig. 2673

Fig. 2674

Fig. 2675

Fig. 2680

Fig. 2685

Fig. 2690

Fig. 2692

Fig. 2695

Fig. 2698

Fig. 2699LF

Fig. 2710

Fig. 2810

Fig. 2901

Fig. 2911

Fig. 2941

Fig. 2952

Fig. 2971

Fig. 2982

FOR STAINLESS STEEL FLOOR DRAINS SEE 9000 SECTION

Fig. 9710

Fig. 9715

Fig. 9730

Fig. 9740

Fig. 9760

ORDERING GUIDELINES

2000 SERIES

After identifying the proper options required to meet the engineering specification, place order as shown below:

Examples:

2005Y04 (-A06-PB-B-U)

Figure No.

Type of Outlet (No-Hub)

Pipe Size (Inches)

Strainer Size (6")

Strainer Material

Sediment Bucket

Vandal Proof

*All variation suffixes are to be shown in parenthesis.

Drain Outlet Types:

C	Caulk Outlet
T	Threaded Outlet
Y	NO-HUB Outlet
L	Speedi-Set Service Weight (02, 03 & 04" sizes only)
LXH	Speedi-Set Extra Heavy (02, 03 & 04" sizes only)

Example: Pipe Size (Inches)

02 - 2"
03 - 3"
04 - 4"
etc.

Example: Extensions 3/4" and up Speedi-Set Extra Heavy

Order as follows:
3/4" -E075
1" -E01
1 1/2" -E015
etc.

HOW TO SELECT A FLOOR DRAIN

Floor drains are primarily used for inside locations where the flow rate into the drain can be anticipated. Sufficient top size and grate free area to pass the anticipated flow are required. Grate free area is defined as "the total area of the drainage openings in the grate." The drain outlet should be sized large enough to safely discharge the maximum flow through the grate without creating water build-up (ponding). The Design Professional shall determine the required flow rate.

Sizing and Location–For most indoor locations, the grate free area should be 1 1/2 times the transverse area of the connecting pipe. See Table 1. The number and location of drains are determined by the Design Professional based on the configuration of the floor plan, type of operation,location of equipment and other factors known to the Design Professional..

When used to drain small exterior areas, area drains should have an open area equal to twice the transverse area of the connecting pipe. See Table 1. The Design Professional shall determine whether the 2 to 1 ratio is sufficient or if exterior surface flow calculations are required.

Recommended Grate Free Areas for Various Outlet Pipe Sizes

Nominal Pipe Size, IN	Transverse Area of Pipe, SQ IN	Minimum Flow Requirements (Interior Areas) SQ IN	Maximum Flow Requirements (Exterior Areas) SQ IN
1 1/2	2.04	3.06	4.08
2	3.14	4.71	6.28
3	7.06	10.59	14.12
4	12.60	18.90	25.20
5	19.60	29.40	39.20
6	28.30	42.45	56.60
8	50.25	75.38	100.50

Table 1

SELECTING THE DRAIN

After the top size and anticipated flow are determined by the Design Professional, the following points shall be taken into consideration when selecting the floor drain.

Selection of Grate or Cover (Based on Anticipated Traffic)–ASME A12.6.3 (Floor Drains) ratings are as follows. These are static load ratings and do not take into consideration impact or dynamic loading. These load ratings are general catagories and are provided for guide purposes only. The Design Professional shall contact the factory for unusual applications, where conditions of use, load concentration, installations, etc., can affect results and service.

Per ASME A112.6.3 (Formerly ANSI A112.21.1M):

- *LIGHT DUTY: All grates/covers having a safe live load under 2,000 lbs. (900 KG).*
- *MEDIUM DUTY: All grates/covers having a safe live load between 2,000 lbs. (900 KG) and 4,999 lbs. (2250 KG).*
- *HEAVY DUTY: All grates/covers having a safe live load between 5,000 lbs. (2250 KG) and 7,499 lbs. (3375 KG).*
- *EXTRA HEAVY DUTY: All grates/covers having a safe live load between 7,500 lbs. (3375) and 10,000 lbs. (4500 KG).*
- *SPECIAL DUTY: When the grate safe live load is greater than 10,000 lbs. (4,500 KG).*

After the weight capacity is established, a suitable drain can be selected.
IT IS THE RESPONSIBILITY OF THE DESIGN PROFESSIONAL TO CONTACT THE FACTORY AND OBTAIN SPECIFIC LOAD RATINGS FOR EACH SPECIFIC DRAIN WHETHER IT IS A STANDARD OR UNUSUAL APPLICATION.

Selection of Top Material–*(Unfinished Areas)*–Drains located in heavy traffic areas should be specified with heavy duty cast iron grates. In areas where shock loads are anticipated, a ductile iron grate should be specified in lieu of the cast iron grate.

(Finished Areas)–Most drains are available with nickel bronze or bronze tops to match the surrounding trim in finished areas. Usually finished areas require light duty or medium duty tops.

(Finished Areas with Increased Load)–Many finished floor areas are subject to increased loadings. Examples are convention centers, equipment showrooms and industrial plants. Heavy duty cast iron tractor grates SHALL be specified with bronze or nickel bronze veneered tops.

Top Shape–Round, square or rectangular styles are available to blend with all types of construction and floor patterns. The round top is the most flexible type since it can be easily oriented to most floor patterns.

Body Selection–Body depth is proportioned to the top size. Many Smith floor drains can be specified with various body depths. The deeper body is desirable when unusually large amounts of water are to be drained or an extra large sediment bucket is required.

Most floor drain bodies are available with a flange for either anchoring the drain in the floor slab or for use as a flashing flange in upper floors and waterproofed areas. Many Smith drains are regularly furnished with a flanged body and a combination "top flashing collar" which can be used to clamp the waterproof membrane.

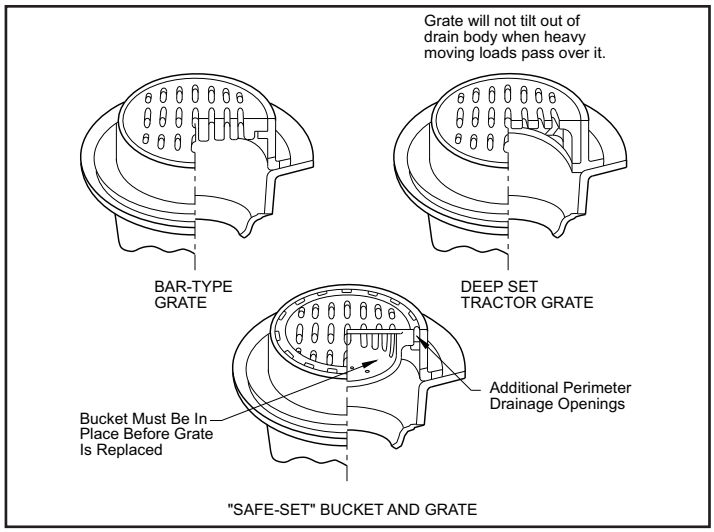

"SAFE-SET" BUCKET AND GRATE

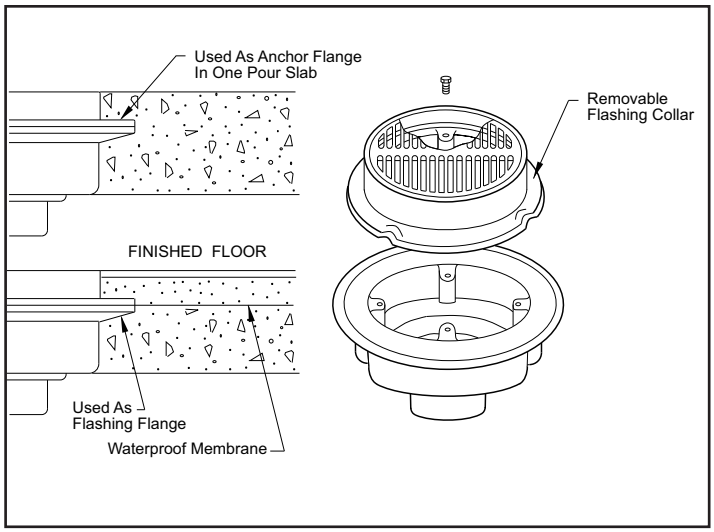

FORMULA TO CONVERT FREE (OPEN) AREA TO GPM

VALUES:

Q= Flow Rate in Gallons Per Minute (GPM)
Cd= Discharge Coefficient .06 (assumed)
A= Free (Open) Area of Grate in **SQUARE FEET**
g= Acceleration in Feet Per Second .32 FPS
h= Head of Water Above Grate in **FEET**

$$\mathbf{Q = 448.2 \times Cd \times A \times \sqrt{2gh}}$$

Note: The 'A' factor which is the free (open) area of the grate in square inches must be converted to 'square feet'.
Square Inches x .00694 = Square Feet

Note: The 'h' factor which is the head of water above the grate in inches must be converted from inches to 'feet'.
Inches x .08333 = Feet

EXAMPLE:

Find the GPM for a floor drain with 12 square inches of free (open) area with a 1/2 (.5) inch head of water over the grate.

Q = GPM
A = .0833 SQ. FT. (12 SQ. Inches)
g = 32.2
h = 0.041667 Feet (1/2 [.5] Inch)

$$Q = 448.2 \times 0.6 \times .0833 \times \sqrt{2gh}$$

$$\sqrt{2gh} = 2 \times 32.2 \times 0.041667 \times \sqrt{2.6833}$$

$$Q = 448.2 \times 0.6 \times .0833 \times 1.6380 = 36.7 \text{ GPM}$$

NOTES

FIG. 2005 (-A) FLOOR DRAIN WITH ADJ. ROUND STRAINER
FIG. 2010 (-A) FLOOR DRAIN WITH ADJ. ROUND STRAINER

FUNCTION: General service floor drain for use in showers, toilets, kitchens and other finished areas where foot traffic is expected. Load Rating: Light Duty having a Safe Live (Static) Load less than 2,000 lbs. (900 kg) per ASME A112.6.3 Floor Drain Standard. For the specific Safe Live Load rating of any grate, contact the Smith representative or factory direct.

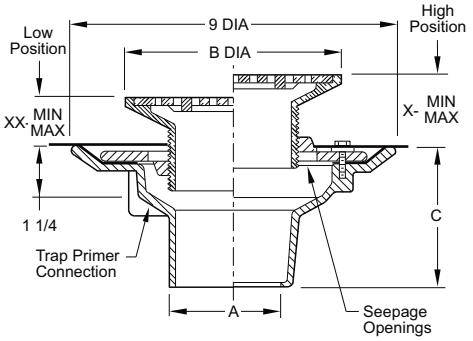

OUTLET VARIATIONS (Specify type of outlet and pipe size in inches.)

Outlet Type	Outlet Designation Outlet Type/Pipe Size	"C" Body HT. DIM.	ADD
Inside Caulk (2010)	C02, C03, C04	4"	N/C
Speedi-Set SW (2005)	L02, L03, L04	4"	N/C
Speedi-Set XH (2005)	LXH02, LXH03, LXH04	4"	N/C
Threaded (2010)	T02, T03, T04	3"	99.00
No-Hub (2005)	Y02, Y03, Y04	4"	N/C

OPTIONS:		ADD
-ARI	Acid Resistant Inside or Outside	215.00
-ARIO	Acid Resistant Inside & Outside	215.00
-B	Sediment Bucket	139.00
-BB	Bronze Body, 02-04"	1,549.00
	05-06"	4,762.00
-BFV	Ball Float Backwater Valve	485.00
-DID	Drain Installation Device	See Fig. 2038
-G	Galvanized Body	251.00
-H	Hinged Grate	356.00
-HP	Heel Proof Grate	N/C
-P	Trap Primer Conn	N/C
-U	Vandal Proof Screws	70.00
-V	Flapper Backwater Valve	485.00

A OUTLET SIZE	B TOP SIZE	*X MIN	*X MAX	*XX MIN	*XX MAX	PB TOP	†NB TOP	CP TOP	APPROX. WEIGHT LBS.
02, 03, 04"	05"	1 1/4	2 1/4	3/4	1 5/8	**586.00**	**616.00**	**650.00**	12
02, 03, 04"	06"	1 1/4	2 1/4	3/4	1 5/8	**683.00**	**757.00**	**807.00**	13
02, 03, 04"	07"	1 1/4	2 1/4	7/8	1 7/8	**827.00**	**872.00**	**932.00**	14
02, 03, 04"	08"	1 1/2	2 1/2	1	1 7/8	**1,038.00**	**1,095.00**	**1,181.00**	15
02, 03, 04"	•09"	1 1/2	2 3/8	1	1 7/8	**1,418.00**	**1,494.00**	**1,617.00**	18
02, 03, 04"	•10"	1 1/2	2 3/8	1	1 7/8	**1,418.00**	**1,494.00**	**1,617.00**	21

REGULARLY FURNISHED: Duco Cast Iron Body with Flashing Collar and Adjustable Round Strainer Head.

• Add 3/8" to min/max dimensions for round strainers.
*Collar is reversible to obtain extreme high and low strainer positions.

FLOOR DRAINS

FIG. 2005 (-B) FLOOR DRAIN WITH ADJ. SQUARE STRAINER
FIG. 2010 (-B) FLOOR DRAIN WITH ADJ. SQUARE STRAINER

FUNCTION: General service floor drain for use in showers, toilets, kitchens and other finished areas where foot traffic is expected. Load Rating: Light Duty having a Safe Live (Static) Load less than 2,000 lbs. (900 kg) per ASME A112.6.3 Floor Drain Standard. For the specific Safe Live Load rating of any grate, contact the Smith representative or factory direct.

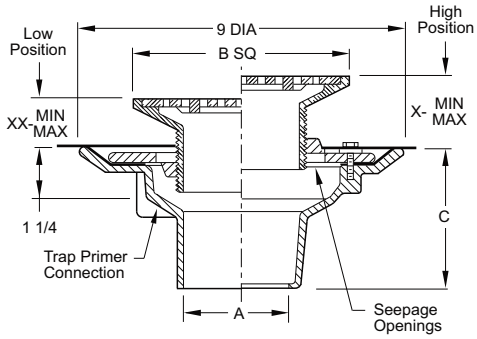

OUTLET VARIATIONS (Specify type of outlet and pipe size in inches.)

Outlet Type	Outlet Designation Outlet Type/Pipe Size	"C" Body HT. DIM.	ADD
Inside Caulk (2010)	C02, C03, C04	4"	N/C
Speedi-Set SW (2005)	L02, L03, L04	4"	N/C
Speedi-Set XH (2005)	LXH02, LXH03, LXH04	4"	N/C
Threaded (2010)	T02, T03, T04	3"	99.00
No-Hub (2005)	Y02, Y03, Y04	4"	N/C

OPTIONS:		ADD
-ARI	Acid Resistant Inside or Outside	215.00
-ARIO	Acid Resistant Inside & Outside	215.00
-B	Sediment Bucket	139.00
-BB	Bronze Body, 02-04"	1,549.00
	05-06"	4,762.00
-BFV	Ball Float Backwater Valve	485.00
-DID	Drain Installation Device	See Fig. 2038
-G	Galvanized Body	251.00
-H	Hinged Grate	356.00
-HP	Heel Proof Grate	N/C
-P	Trap Primer Conn	N/C
-U	Vandal Proof Screws	70.00
-V	Flapper Backwater Valve	485.00

A OUTLET SIZE	B TOP SIZE	*X MIN	*X MAX	*XX MIN	*XX MAX	PB TOP	†NB TOP	CP TOP	APPROX. WEIGHT LBS.
02, 03, 04"	05 x 05"	1 1/4	2 1/4	3/4	1 5/8	**758.00**	**828.00**	**883.00**	12
02, 03, 04"	06 x 06"	1 1/4	2 1/4	3/4	1 5/8	**877.00**	**921.00**	**993.00**	13
02, 03, 04"	07 x 07"	1 1/4	2 1/4	7/8	1 7/8	**1,034.00**	**1,106.00**	**1,194.00**	14
02, 03, 04"	08 x 08"	1 1/2	2 1/2	1	1 7/8	**1,208.00**	**1,338.00**	**1,437.00**	15
02, 03, 04"	09 x 09"	1 1/2	2 3/8	1	1 7/8	**1,547.00**	**1,693.00**	**1,834.00**	18
02, 03, 04"	10 x 10"	1 1/2	2 3/8	1	1 7/8	**1,985.00**	**2,128.00**	**2,320.00**	21

REGULARLY FURNISHED: Duco Cast Iron Body with Flashing Collar and Adjustable Square Strainer Head.

*Collar is reversible to obtain extreme high and low strainer positions.

When ordering, specify drain body and strainer type, size and finish. Ex. 2005Y04 w/A05NB.

†REGULARLY FURNISHED

FIG. 2005 (-BS) FLOOR DRAIN AND ADJ. STRAINER WITH SQUARE SOLID HINGED COVER
FIG. 2010 (-BS) FLOOR DRAIN AND ADJ. STRAINER WITH SQUARE SOLID HINGED COVER

FUNCTION: General service floor drain for use in showers, toilets, kitchens and other finished areas where foot traffic is expected. Reversible flashing collar permits adjustment of the strainer to meet finished floor level. Light Duty.

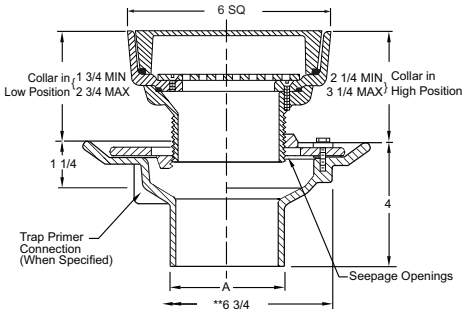

A OUTLET SIZE	B TOP SIZE	X MIN	X MAX	XX MIN	XX MAX	PB TOP	†NB TOP	CP TOP	APPROX. WEIGHT LBS.
02, 03, 04"	06 x 06"	1 1/4	2 1/4	3/4	1 5/8	**1,393.00**	**1,591.00**	**1,730.00**	11

REGULARLY FURNISHED: Duco Cast Iron Body with Flashing Collar and Adjustable Strainer with Hinged Solid Cover.

OUTLET VARIATIONS (Specify type of outlet and pipe size in inches.)

Outlet Type	Outlet Designation Outlet Type/Pipe Size	"C" Body HT. DIM.	ADD
Inside Caulk (2010)	C02, C03, C04	4"	**N/C**
Speedi-Set SW (2005)	L02, L03, L04	4"	**N/C**
Speedi-Set XH (2005)	LXH02, LXH03, LXH04	4"	**N/C**
Threaded (2010)	T02, T03, T04	3"	**99.00**
No-Hub (2005)	Y02, Y03, Y04	4"	**N/C**

OPTIONS:		ADD
-ARI	Acid Resistant Inside or Outside	**215.00**
-ARIO	Acid Resistant Inside & Outside	**215.00**
-B	Sediment Bucket	**POA**
-BB	Bronze Body, 02-04"	**1,549.00**
	05-06"	**4,762.00**
-DID	Drain Installation Device	**See Fig. 2038**
-G	Galvanized Body	**251.00**
-GC	Gasketed/Water Tight	**104.00**
-P	Trap Primer Conn	**N/C**
-SEC	Secured Cover	**70.00**
-SG	Secondary Strainer Grate	**79.00**
-U	Vandal Proof Screws	**70.00**

FIG. 2005 (-C) FLOOR DRAIN AND ADJ. STRAINER WITH ROUND REINFORCED GRATE
FIG. 2010 (-C) FLOOR DRAIN AND ADJ. STRAINER WITH ROUND REINFORCED GRATE

FUNCTION: General service floor drain for use in showers, toilets, kitchens and other finished areas where foot traffic is expected. Reversible flashing collar permits adjustment of the strainer to meet finished floor level. Used in finished floors where light wheeled loads are anticipated. Light Duty.

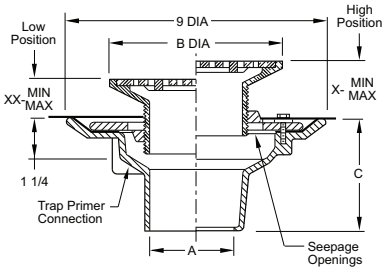

A OUTLET SIZE	B TOP SIZE	X MIN	X MAX	XX MIN	XX MAX	PB TOP	†NB TOP	CP TOP	APPROX. WEIGHT LBS.
02, 03, 04"	05"	1 1/4	2 1/4	3/4	1 5/8	**859.00**	**886.00**	**918.00**	13
02, 03, 04"	06"	1 1/4	2 1/4	3/4	1 5/8	**949.00**	**1,023.00**	**1,071.00**	15
02, 03, 04"	08"	1 1/2	2 1/2	1	1 7/8	**1,301.00**	**1,356.00**	**1,432.00**	17
02, 03, 04"	10"	1 1/2	2 3/8	1	1 7/8	**1,680.00**	**1,758.00**	**1,884.00**	19

REGULARLY FURNISHED: Duco Cast Iron Body with Flashing Collar and Adjustable Strainer with Round Reinforced Grate.

OUTLET VARIATIONS (Specify type of outlet and pipe size in inches.)

Outlet Type	Outlet Designation Outlet Type/Pipe Size	"C" Body HT. DIM.	ADD
Inside Caulk (2010)	C02, C03, C04	4"	**N/C**
Speedi-Set SW (2005)	L02, L03, L04	4"	**N/C**
Speedi-Set XH (2005)	LXH02, LXH03, LXH04	4"	**N/C**
Threaded (2010)	T02, T03, T04	3"	**99.00**
No-Hub (2005)	Y02, Y03, Y04	4"	**N/C**

OPTIONS:		ADD
-ARI	Acid Resistant Inside or Outside	**215.00**
-ARIO	Acid Resistant Inside & Outside	**215.00**
-B	Sediment Bucket	**139.00**
-BB	Bronze Body, 02-04"	**1,549.00**
	05-06"	**4,762.00**
-BFV	Ball Float Backwater Valve	**485.00**
-DID	Drain Installation Device	**See Fig. 2038**
-G	Galvanized Body	**251.00**
-P	Trap Primer Conn	**N/C**
-U	Vandal Proof Screws	**70.00**
-V	Flapper Backwater Valve	**485.00**

When ordering, specify drain body and strainer type, size and finish. Ex. 2005Y04 w/A05NB.

FIG. DX2005 (A) FLOOR OR SHOWER DRAIN AND ADJ. WIDE FLANGE STRAINER WITH ROUND GRATE
FIG. DX2010 (B) FLOOR OR SHOWER DRAIN AND ADJ. WIDE FLANGE STRAINER WITH SQUARE GRATE

FUNCTION: General service floor drain for use in showers, toilets, kitchens and other finished areas where foot traffic is expected. Load Rating: Light Duty having a Safe Live (Static) Load less than 2,000 lbs. (900 kg) per ASME A112.6.3 Floor Drain Standard. For the specific Safe Live Load rating of any grate, contact the Smith representative or factory direct.

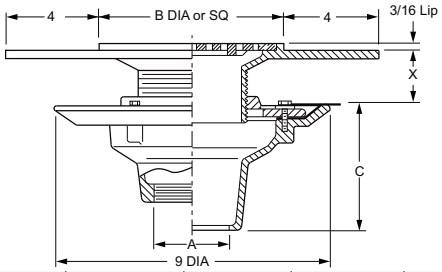

A OUTLET SIZE	B STRAINER SIZE	X MIN	X MAX	PB TOP	†NB TOP	CP TOP	APPROX. WEIGHT LBS.
02, 03, 04"	05"	1 1/4	2	**1,718.00**	**1,787.00**	**1,942.00**	27
02, 03, 04"	06"	1 1/4	2	**1,718.00**	**1,787.00**	**1,942.00**	29

REGULARLY FURNISHED: Duco Cast Iron Body, Adjustable Strainer as Indicated by Suffix Letter Selected with 4" Wide Flange and Secondary Flashing Flange.

OUTLET VARIATIONS (Specify type of outlet and pipe size in inches.)

Outlet Type	Outlet Designation Outlet Type/Pipe Size	"C" Body HT. DIM.	ADD
Inside Caulk (2010)	C02, C03, C04	4"	**N/C**
Speedi-Set SW (2005)	L02, L03, L04	4"	**N/C**
Speedi-Set XH (2005)	LXH02, LXH03, LXH04	4"	**N/C**
Threaded (2010)	T02, T03, T04	3"	**99.00**
No-Hub (2005)	Y02, Y03, Y04	4"	**N/C**

OPTIONS:		ADD
-ARI	Acid Resistant Inside or Outside	**215.00**
-ARIO	Acid Resistant Inside & Outside	**215.00**
-BB	Bronze Body, 02-04"	**1,549.00**
	05-06"	**4,762.00**
-DID	Drain Installation Device	**See Fig. 2038**
-G	Galvanized Body	**251.00**
-LWH	Less Weep Holes	**N/C**
-P	Trap Primer Conn	**N/C**
-SH	Sec Holes in Flange	**156.00**
-U	Vandal Proof Screws	**70.00**

†REGULARLY FURNISHED

FIG. 2005(-D) FLOOR DRAIN AND ADJ. STRAINER WITH ROUND REINFORCED TRACTOR GRATE
FIG. 2010(-E) FLOOR DRAIN AND ADJ. STRAINER WITH ROUND REINFORCED TRACTOR GRATE

FUNCTION: Used in finished floors where light weight wheeled loads are anticipated and loose set non-tilt tractor grate is desired.

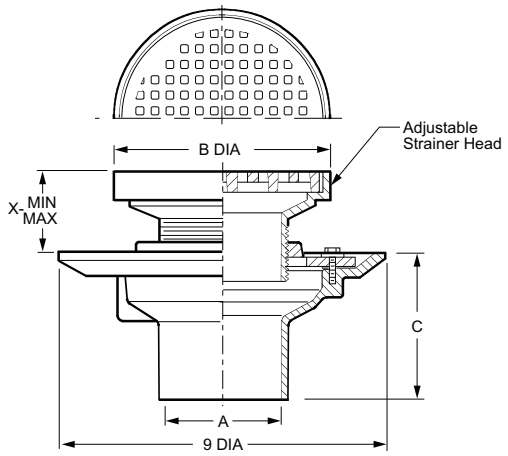

OUTLET VARIATIONS (Specify type of outlet and pipe size in inches.)

Outlet Type	Outlet Designation Outlet Type/Pipe Size	"C" Body HT. DIM.	ADD
Inside Caulk (2010)	C02, C03, C04	4"	N/C
Speedi-Set SW (2005)	L02, L03, L04	4"	N/C
Speedi-Set XH (2005)	LXH02, LXH03, LXH04	4"	N/C
Threaded (2010)	T02, T03, T04	3"	99.00
No-Hub (2005)	Y02, Y03, Y04	4"	N/C

OPTIONS:		ADD
-ARI	Acid Resistant Inside or Outside	215.00
-ARIO	Acid Resistant Inside & Outside	215.00
-B	Sediment Bucket	139.00
-BB	Bronze Body, 02-04"	1,549.00
	05-06"	4,762.00
-BFV	Ball Float Backwater Valve	485.00
-DID	Drain Installation Device	See Fig. 2038
-G	Galvanized CI Body	251.00
-P	Trap Primer Conn	N/C
-U	Vandal Proof Screws	70.00
-V	Backwater Valve	485.00

FLOOR DRAINS

A OUTLET SIZE	STRAINER SUFFIX	B TOP SIZE	X MIN	X MAX	CI TOP	PB TOP	†NB TOP	CP TOP	APPROX. WEIGHT LBS.
02, 03, 04"	D	07"	2 1/4	3 1/4	692.00	1,308.00	1,430.00	1,545.00	14
02, 03, 04"	E	09"	2 3/4	3 1/2	853.00	1,845.00	1,992.00	2,160.00	6

REGULARLY FURNISHED: Duco Cast Iron Body and Flashing Collar, Adjustable Strainer Head as Indicated by Suffix Letter Selected. Light Duty Tractor Grate.

When ordering, specify drain body and strainer type, size and finish. Ex. 2005Y04 w/A05NB.

FIG. 2005 (-F) FLOOR DRAIN AND ADJ. TILE FLANGE STRAINER WITH ROUND GRATE
FIG. 2010 (-F) FLOOR DRAIN AND ADJ. TILE FLANGE STRAINER WITH ROUND GRATE

FUNCTION: Provides integral flange set 5/32" below rim to receive floor covering. Flange may have option of tapped holes for securing pan and gasket.

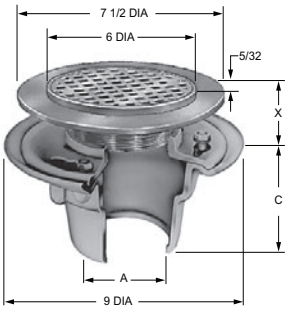

OUTLET VARIATIONS (Specify type of outlet and pipe size in inches.)

Outlet Type	Outlet Designation Outlet Type/Pipe Size	"C" Body HT. DIM.	ADD
Inside Caulk (2010)	C02, C03, C04	4"	N/C
Speedi-Set SW (2005)	L02, L03, L04	4"	N/C
Speedi-Set XH (2005)	LXH02, LXH03, LXH04	4"	N/C
Threaded (2010)	T02, T03, T04	3"	99.00
No-Hub (2005)	Y02, Y03, Y04	4"	N/C

OPTIONS:		ADD
-ARI	Acid Resistant Inside or Outside	215.00
-ARIO	Acid Resistant Inside & Outside	215.00
-B	Sediment Bucket	139.00
-BB	Bronze Body, 02-04"	1,549.00
	05-06"	4,762.00
-BFV	Ball Float Backwater Valve	485.00
-DID	Drain Installation Device	See Fig. 2038
-G	Galvanized Body	251.00
-P	Trap Primer Conn	N/C
-SH	Tapped Holes in Flange	156.00
-U	Vandal Proof Screws	70.00
-V	Flapper Backwater Valve	485.00

A OUTLET SIZE	STRAINER SIZE	X MIN	X MAX	DUCO CI PB TOP	DUCO CI †NB TOP	DUCO CI CP TOP	APPROX. WEIGHT LBS.
02, 03, 04"	06"	1 1/4	2 1/8	1,310.00	1,435.00	1,547.00	14

REGULARLY FURNISHED: Duco Cast Iron Body and Flashing Collar, Adjustable Strainer Head as Indicated by Suffix Letter Selected.

†REGULARLY FURNISHED

FIG. 2005 (-F37) FLOOR DRAIN AND ADJ. STRAINER WITH ROUND RECESSED GRATE
FIG. 2010 (-F38) FLOOR DRAIN AND ADJ. STRAINER WITH ROUND RECESSED GRATE

FUNCTION: Used in a non-traffic area when a funnel type strainer head is required and space does not allow use of the 3500 Series funnel. The extended rim allows use as an anti-flood and anti-splash drip pan.

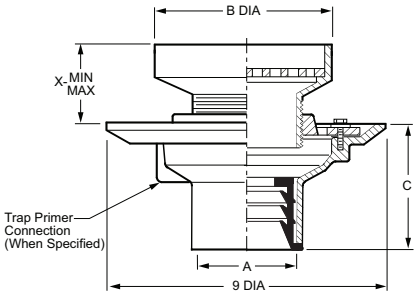

A OUTLET SIZE	STRAINER SUFFIX	B TOP SIZE	X MIN	X MAX	CI TOP	PB TOP	†NB TOP	CP TOP	APPROX. WEIGHT LBS.
02, 03, 04"	F37	07"	2 5/8	3 1/2	**688.00**	**1,312.00**	**1,435.00**	**1,552.00**	19
02, 03, 04"	F38	09"	2 3/4	3 1/2	**853.00**	**1,847.00**	**2,013.00**	**2,182.00**	22

REGULARLY FURNISHED: Duco Cast Iron Body and Flashing Collar, Adjustable Nickel Bronze Strainer Head as Indicated by Suffix Letter Selected. Flush with Floor Funnel with Anti-Splash Rim and Grate.

OUTLET VARIATIONS (Specify type of outlet and pipe size in inches.)

Outlet Type	Outlet Designation Outlet Type/Pipe Size	"C" Body HT. DIM.	ADD
Inside Caulk (2010)	C02, C03, C04	4"	**N/C**
Speedi-Set SW (2005)	L02, L03, L04	4"	**N/C**
Speedi-Set XH (2005)	LXH02, LXH03, LXH04	4"	**N/C**
Threaded (2010)	T02, T03, T04	3"	**99.00**
No-Hub (2005)	Y02, Y03, Y04	4"	**N/C**

OPTIONS:		ADD
-ARI	Acid Resistant Inside or Outside	**215.00**
-ARIO	Acid Resistant Inside & Outside	**215.00**
-BB	Bronze Body, 02-04"	**1,549.00**
	05-06"	**4,762.00**
-DID	Drain Installation Device	**See Fig. 2038**
-G	Galvanized CI Body	**251.00**
-GS	Galvanized Body & Strainer	
	F37 (add to CI)	**442.00**
	F38 (add to CI)	**607.00**
-P	Trap Primer Conn	**N/C**

When ordering, specify drain body and strainer type, size and finish. Ex. 2005Y04 w/A05NB.

FIG. 2005 (-G) FLOOR DRAIN AND ADJ. STRAINER WITH ROUND LOW DOME GRATE
FIG. 2010 (-G) FLOOR DRAIN AND ADJ. STRAINER WITH ROUND LOW DOME GRATE

FUNCTION: Used in gutters and recessed areas where excessive debris build-up is expected. Dome insures drainage even when partly covered.

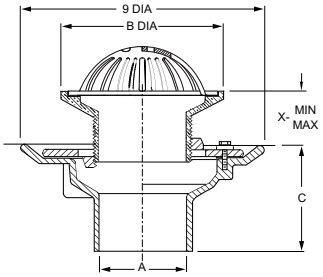

A OUTLET SIZE	B STRAINER SIZE	X MIN	X MAX	DUCO CI PB TOP	DUCO CI †NB TOP	DUCO CI CP TOP	APPROX. WEIGHT LBS.
02, 03, 04"	05"	1 1/4	2 1/4	**824.00**	**872.00**	**933.00**	11
02, 03, 04"	06"	1 1/4	2 1/4	**943.00**	**1,044.00**	**1,118.00**	13
02, 03, 04"	08"	1 1/2	2 1/2	**1,240.00**	**1,309.00**	**1,417.00**	16

REGULARLY FURNISHED: Duco Cast Iron Body with Flashing Collar and Adjustable Low Dome Strainer Head.

OUTLET VARIATIONS (Specify type of outlet and pipe size in inches.)

Outlet Type	Outlet Designation Outlet Type/Pipe Size	"C" Body HT. DIM.	ADD
Inside Caulk (2010)	C02, C03, C04	4"	**N/C**
Speedi-Set SW (2005)	L02, L03, L04	4"	**N/C**
Speedi-Set XH (2005)	LXH02, LXH03, LXH04	4"	**N/C**
Threaded (2010)	T02, T03, T04	3"	**99.00**
No-Hub (2005)	Y02, Y03, Y04	4"	**N/C**

OPTIONS:		ADD
-B	Sediment Bucket	**139.00**
-BB	Bronze Body, 02-04"	**1,549.00**
	05-06"	**4,762.00**
-BFV	Ball Float Backwater Valve	**485.00**
-DID	Drain Installation Device	**See Fig. 2038**
-G	Galvanized Body	**251.00**
-MS	SS Mesh on Dome	**301.00**
-P	Trap Primer Conn	**N/C**
-U	Vandal Proof Screws	**70.00**
-V	Flapper Type Backwater Valve	**485.00**

FIG. 2005 (-H) FLOOR DRAIN AND ADJ. STRAINER WITH ROUND SOLID HINGED COVER
FIG. 2010 (-H) FLOOR DRAIN AND ADJ. STRAINER WITH ROUND SOLID HINGED COVER

FUNCTION: Used in areas where intermittent drain use is required. Solid cover prevents intrusion of chips, sawdust, etc., which are swept up before cover is opened for washdown. The secondary strainer prevents debris from entering the waste line.

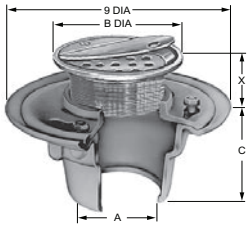

A OUTLET SIZE	B STRAINER SIZE	X MIN	X MAX	DUCO CI PB TOP	DUCO CI †NB TOP	DUCO CI CP TOP	APPROX. WEIGHT LBS.
02, 03, 04"	05"	1 1/4	2 1/4	**1,044.00**	**1,114.00**	**1,194.00**	13
02, 03, 04"	06"	1 1/4	2 1/4	**1,100.00**	**1,240.00**	**1,338.00**	14
02, 03, 04"	07"	1 1/4	2 1/4	**1,601.00**	**1,787.00**	**1,942.00**	16
02, 03, 04"	08"	1 1/2	2 1/2	**1,671.00**	**1,810.00**	**1,973.00**	16

REGULARLY FURNISHED: Duco Cast Iron Body and Flashing Collar, Adjustable Strainer Head as Indicated by Suffix Letter Selected.

OUTLET VARIATIONS (Specify type of outlet and pipe size in inches.)

Outlet Type	Outlet Designation Outlet Type/Pipe Size	"C" Body HT. DIM.	ADD
Inside Caulk (2010)	C02, C03, C04	4"	**N/C**
Speedi-Set SW (2005)	L02, L03, L04	4"	**N/C**
Speedi-Set XH (2005)	LXH02, LXH03, LXH04	4"	**N/C**
Threaded (2010)	T02, T03, T04	3"	**99.00**
No-Hub (2005)	Y02, Y03, Y04	4"	**N/C**

OPTIONS:		ADD
-ARI	Acid Resistant Inside or Outside	**215.00**
-ARIO	Acid Resistant Inside & Outside	**215.00**
-BB	Bronze Body, 02-04"	**1,549.00**
	05-06"	**4,762.00**
-BFV	Ball Float Backwater Valve	**485.00**
-DID	Drain Installation Device	**See Fig. 2038**
-G	Galvanized Body	**251.00**
-P	Trap Primer Conn	**N/C**
-U	Vandal Proof Screws	**70.00**
-V	Flapper Type Backwater Valve	**485.00**

When ordering, specify drain body and strainer type, size and finish. Ex. 2005Y04 w/A05NB.

†REGULARLY FURNISHED

FIG. 2005 (-J) FLOOR DRAIN AND ADJ. STRAINER WITH ROUND SPANNER WRENCH COVER
FIG. 2010 (-J) FLOOR DRAIN AND ADJ. STRAINER WITH ROUND SPANNER WRENCH COVER

FUNCTION: Solid gas tight, vandal proof, threaded cover for areas where intermittent drain use is required.

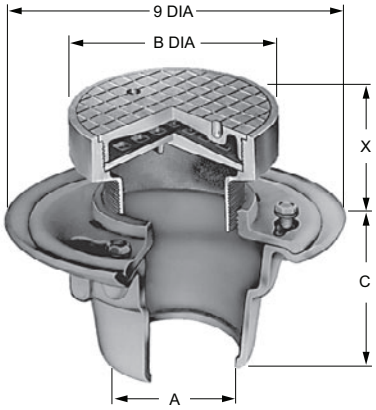

A OUTLET SIZE	B STRAINER SIZE	X MIN MAX	DUCO CI PB TOP	DUCO CI †NB TOP	DUCO CI CP TOP	APPROX. WEIGHT LBS.
02, 03, 04"	06"	2" 3"	**1,353.00**	**1,451.00**	**1,573.00**	19

REGULARLY FURNISHED: Duco Cast Iron Body and Flashing Collar, Adjustable Strainer Head as Indicated by Suffix Letter Selected.

OUTLET VARIATIONS (Specify type of outlet and pipe size in inches.)

Outlet Type	Outlet Designation Outlet Type/Pipe Size	"C" Body HT. DIM.	ADD
Inside Caulk (2010)	C02, C03, C04	4"	**N/C**
Speedi-Set SW (2005)	L02, L03, L04	4"	**N/C**
Speedi-Set XH (2005)	LXH02, LXH03, LXH04	4"	**N/C**
Threaded (2010)	T02, T03, T04	3"	**99.00**
No-Hub (2005)	Y02, Y03, Y04	4"	**N/C**

OPTIONS:		ADD
-ARI	Acid Resistant Inside or Outside	**215.00**
-ARIO	Acid Resistant Inside & Outside	**215.00**
-B	Sediment Bucket	**139.00**
-BB	Bronze Body, 02-04"	**1,549.00**
	05-06"	**4,762.00**
-BFV	Ball Float Backwater Valve	**485.00**
-DID	Drain Installation Device	**See Fig. 2038**
-G	Galvanized Body	**251.00**
-P	Trap Primer Conn	**N/C**
-SC	Smooth Cover	**262.00**
-SW	Spanner Wrench	**177.00**
-V	Flapper Type Backwater Valve	**485.00**

FIG. 2005 (-K) FLOOR DRAIN AND ADJ. STRAINER WITH SQUARE REINFORCED GRATE
FIG. 2010 (-K) FLOOR DRAIN AND ADJ. STRAINER WITH SQUARE REINFORCED GRATE

FUNCTION: Used in finished floors where some light wheeled traffic is anticipated.

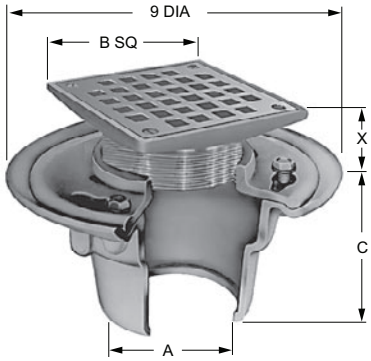

A OUTLET SIZE	B STRAINER SIZE	X MIN MAX	DUCO CI PB TOP	DUCO CI †NB TOP	DUCO CI CP TOP	APPROX. WEIGHT LBS.
02, 03, 04"	05 x 05"	1 1/4" 2 1/4"	**905.00**	**963.00**	**1,039.00**	14
02, 03, 04"	06 x 06"	1 1/4" 2 1/4"	**1,071.00**	**1,132.00**	**1,210.00**	16
02, 03, 04"	07 x 07"	1 1/4" 2 1/4"	**1,233.00**	**1,293.00**	**1,393.00**	17
02, 03, 04"	08 x 08"	1 1/2" 2 1/2"	**1,475.00**	**1,591.00**	**1,730.00**	18

REGULARLY FURNISHED: Duco Cast Iron Body and Flashing Collar, Adjustable Strainer Head as Indicated by Suffix Letter Selected.

OUTLET VARIATIONS (Specify type of outlet and pipe size in inches.)

Outlet Type	Outlet Designation Outlet Type/Pipe Size	"C" Body HT. DIM.	ADD
Inside Caulk (2010)	C02, C03, C04	4"	**N/C**
Speedi-Set SW (2005)	L02, L03, L04	4"	**N/C**
Speedi-Set XH (2005)	LXH02, LXH03, LXH04	4"	**N/C**
Threaded (2010)	T02, T03, T04	3"	**99.00**
No-Hub (2005)	Y02, Y03, Y04	4"	**N/C**

OPTIONS:		ADD
-ARI	Acid Resistant Inside or Outside	**215.00**
-ARIO	Acid Resistant Inside & Outside	**215.00**
-B	Sediment Bucket	**139.00**
-BB	Bronze Body, 02-04"	**1,549.00**
	05-06"	**4,762.00**
-BFV	Ball Float Backwater Valve	**485.00**
-DID	Drain Installation Device	**See Fig. 2038**
-G	Galvanized Body	**251.00**
-P	Trap Primer Conn	**N/C**
-U	Vandal Proof Screws	**70.00**
-V	Flapper Type Backwater Valve	**485.00**

When ordering, specify drain body and strainer type, size and finish. Ex. 2005Y04 w/A05NB.

†REGULARLY FURNISHED

FIG. 2005 (L-T) FLOOR DRAIN AND ADJ. STRAINER WITH RECTANGULAR GRATE
FIG. 2010 (L-T) FLOOR DRAIN AND ADJ. STRAINER WITH RECTANGULAR GRATE

FUNCTION: Used in shower room, gutters and similar areas where large grate free area is required and limited width is available.

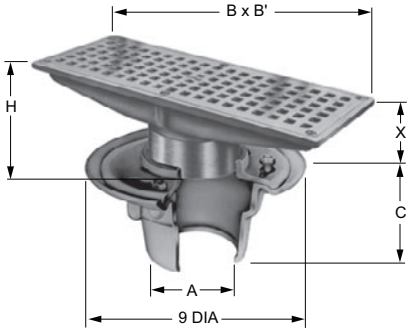

OUTLET VARIATIONS (Specify type of outlet and pipe size in inches.)

Outlet Type	Outlet Designation Outlet Type/Pipe Size	"C" Body HT. DIM.	ADD
Inside Caulk (2010)	C02, C03, C04	4"	N/C
Speedi-Set SW (2005)	L02, L03, L04	4"	N/C
Speedi-Set XH (2005)	LXH02, LXH03, LXH04	4"	N/C
Threaded (2010)	T02, T03, T04	3"	99.00
No-Hub (2005)	Y02, Y03, Y04	4"	N/C

OPTIONS:		ADD
-ARI	Acid Resistant Inside or Outside	215.00
-ARIO	Acid Resistant Inside & Outside	215.00
-B	Sediment Bucket	139.00
-BB	Bronze Body, 02-04"	1,549.00
	05-06"	4,762.00
-BFV	Ball Float Backwater Valve	485.00
-DID	Drain Installation Device	See Fig. 2038
-G	Galvanized Body	251.00
-P	Trap Primer Conn	N/C
-U	Vandal Proof Screws	70.00
-V	Flapper Backwater Valve	485.00

A OUTLET SIZE	STRAINER SUFFIX	B X B STRAINER SIZE	X MIN	X MAX	H	DUCO CI PB TOP	DUCO CI †NB TOP	DUCO CI CP TOP	APPROX. WEIGHT LBS.
02, 03, 04"	L	4 1/4 x 08"	1 3/8"	2 3/8"	2 1/4"	**1,257.00**	**1,356.00**	**1,471.00**	17
02, 03, 04"	M	04 x 12"	1 7/8"	2 3/4"	2 1/2"	**1,430.00**	**1,637.00**	**1,774.00**	19
02, 03, 04"	N	05 x 09"	1 3/8"	2 3/8"	2 1/4"	**1,257.00**	**1,356.00**	**1,466.00**	21
02, 03, 04"	P	05 x 13"	2 1/8"	3"	3"	**1,671.00**	**1,840.00**	**1,995.00**	24
02, 03, 04"	R	06 x 10"	1 3/8"	2 3/8"	2 1/4"	**1,671.00**	**1,840.00**	**1,995.00**	26
02, 03, 04"	T	05 x 17"	2 1/4"	3 1/8"	3"	**1,787.00**	**1,960.00**	**2,132.00**	29

REGULARLY FURNISHED: Duco Cast Iron Body and Flashing Collar, Adjustable Strainer Head as Indicated by Suffix Letter Selected.

FIG. 2005 (-V) FLOOR DRAIN AND ADJ. STRAINER WITH ANGLE GRATE
FIG. 2010 (-W) FLOOR DRAIN AND ADJ. STRAINER WITH ANGLE GRATE

FUNCTION: Shower room drain set at wall and floor junction. Vertical grate openings prevent drain stoppage should flat surface become covered.

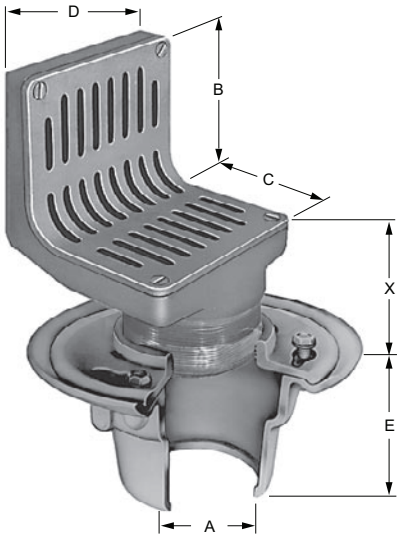

OUTLET VARIATIONS (Specify type of outlet and pipe size in inches.)

Outlet Type	Outlet Designation Outlet Type/Pipe Size	"E" Body HT. DIM.	ADD
Inside Caulk (2010)	C02, C03, C04	4"	N/C
Speedi-Set SW (2005)	L02, L03, L04	4"	N/C
Speedi-Set XH (2005)	LXH02, LXH03, LXH04	4"	N/C
Threaded (2010)	T02, T03, T04	3"	99.00
No-Hub (2005)	Y02, Y03, Y04	4"	N/C

OPTIONS:		ADD
-ARI	Acid Resistant Inside or Outside	215.00
-ARIO	Acid Resistant Inside & Outside	215.00
-BB	Bronze Body, 02-04"	1,549.00
	05-06"	4,762.00
-DID	Drain Installation Device	See Fig. 2038
-G	Galvanized Body	251.00
-P	Trap Primer Conn	N/C
-U	Vandal Proof Screws	70.00

A OUTLET SIZE	STRAINER SUFFIX	B	C	D	X MIN	X MAX	DUCO CI PB TOP	DUCO CI †NB TOP	DUCO CI CP TOP	APPROX. WEIGHT LBS.
02, 03, 04"	V	3 1/2	3 1/2	4 1/2	1 5/8"	2 5/8"	**2,320.00**	**2,512.00**	**2,744.00**	19
02, 03, 04"	W	6 3/4	6 3/4	6 1/2	1 5/8"	2 5/8"	**2,898.00**	**3,146.00**	**3,428.00**	28

REGULARLY FURNISHED: Duco Cast Iron Body and Flashing Collar, Adjustable Strainer Head as Indicated by Suffix Letter Selected.

When ordering, specify drain body and strainer type, size and finish. Ex. 2005Y04 w/A05NB.

†REGULARLY FURNISHED

FIG. 2005 (-Y) FLOOR DRAIN AND ADJ. STRAINER WITH OVERFLOW STANDPIPE
FIG. 2010 (-Z) FLOOR DRAIN AND ADJ. STRAINER WITH OVERFLOW STANDPIPE

FUNCTION: Used as overflow drain in decorative pools, fish ponds or similar areas. Dome prevents floating objects from entering drain line.

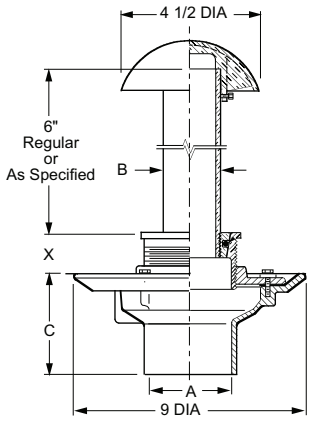

OUTLET VARIATIONS (Specify type of outlet and pipe size in inches.)

Outlet Type	Outlet Designation Outlet Type/Pipe Size	"C" Body HT. DIM.	ADD
Inside Caulk (2010)	C02, C03, C04	4"	N/C
Speedi-Set SW (2005)	L02, L03, L04	4"	N/C
Speedi-Set XH (2005)	LXH02, LXH03, LXH04	4"	N/C
Threaded (2010)	T02, T03, T04	3"	99.00
No-Hub (2005)	Y02, Y03, Y04	4"	N/C

OPTIONS:		ADD
-ARI	Acid Resistant Inside or Outside	215.00
-ARIO	Acid Resistant Inside & Outside	215.00
-BB	Bronze Body, 02-04"	1,549.00
	05-06"	4,762.00
-DID	Drain Installation Device	See Fig. 2038
-G	Galvanized Body	251.00
-P	Trap Primer Conn	N/C

Higher Standpipe, over 6"	PB	NB	CP
per inch Y	123.00	174.00	185.00
per inch Z	215.00	246.00	264.00

A OUTLET SIZE	STRAINER SUFFIX	B STANDPIPE SIZE	X MIN	X MAX	DUCO CI PB TOP	DUCO CI †NB TOP	DUCO CI CP TOP	APPROX. WEIGHT LBS.
02, 03, 04"	Y	2	3/4"	2 1/8"	2,131.00	2,512.00	2,744.00	18
02, 03, 04"	Z	3	3/4"	2 1/8"	2,906.00	3,146.00	3,428.00	24

REGULARLY FURNISHED: Duco Cast Iron Body and Flashing Collar, Adjustable Strainer Head as Indicated by Suffix Letter Selected.

FIG. 2005 NO-HUB OUTLET FLOOR DRAIN BODY AND COLLAR ASSEMBLY

FUNCTION: General service floor drain for use in showers, toilets, kitchens and other finished areas where foot traffic is expected. Reversible flashing collar permits adjustment of the strainer to meet finished floor level.

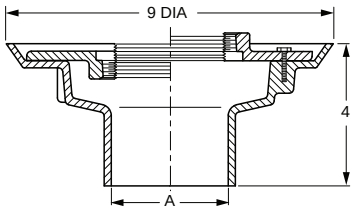

A OUTLET SIZE	COLLAR DIA	†DUCO CI	GALV CI (-G)	APPROX. WEIGHT LBS.
02, 03, 04"	9	246.00	497.00	9
05, 06"	9	953.00	1,204.00	20

REGULARLY FURNISHED: Duco Cast Iron Body and Flashing Collar.

OUTLET VARIATIONS (Specify type of outlet and pipe size in inches.)

Outlet Type	Outlet Designation Outlet Type/Pipe Size	Body HT. DIM.	ADD
Speedi-Set SW	L02, L03, L04	4"	N/C
Speedi-Set XH	LXH02, LXH03, LXH04	4"	N/C
No-Hub	Y02, Y03, Y04, Y05, Y06	4"	N/C

OPTIONS:		ADD
-ARI	Acid Resistant Inside or Outside	215.00
-ARIO	Acid Resistant Inside & Outside	215.00
-BB	Bronze Body, 02-04"	1,549.00
	05-06"	4,762.00
-DID	Drain Installation Device	For Body & DID price, See Fig. 2038
-P050	1/2" Trap Primer Conn	N/C
-P075	3/4" Trap Primer Conn	N/C

When ordering, specify drain body and strainer type, size and finish. Ex. 2005Y04 w/A05NB.

FIG. 2010 CAULK OUTLET FLOOR DRAIN BODY AND COLLAR ASSEMBLY

FUNCTION: General service floor drain for use in showers, toilets, kitchens and other finished areas where foot traffic is expected. Reversible flashing collar permits adjustment of the strainer to meet finished floor level.

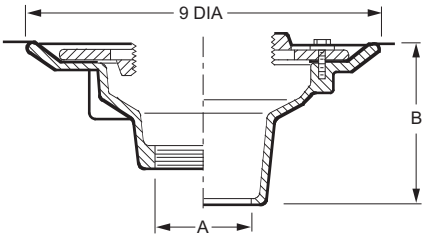

A OUTLET SIZE	COLLAR DIA	†DUCO CI	GALV CI (-G)	APPROX. WEIGHT LBS.
02, 03, 04"	9"	246.00	497.00	9
05, 06"	9"	953.00	1,204.00	20

REGULARLY FURNISHED: Duco Cast Iron Body and Flashing Collar.

OUTLET VARIATIONS (Specify type of outlet and pipe size in inches.)

Outlet Type	Outlet Designation Outlet Type/Pipe Size	B Body HT. DIM.	ADD
Inside Caulk	C02, C03, C04, C05, C06	4"	N/C
Threaded	T02, T03, T04, T05, T06	3"	99.00

OPTIONS:		ADD
-ARI	Acid Resistant Inside or Outside	215.00
-ARIO	Acid Resistant Inside & Outside	215.00
-BB	Bronze Body, 02-04"	1,549.00
	05-06"	4,762.00
-P050	1/2" Trap Primer Conn	N/C
-P075	3/4" Trap Primer Conn	N/C

Note: For body with adjustable strainer head and 4" DIA funnel see Figure 3510-F11.

†REGULARLY FURNISHED

FIG. 2015 SIDE OUTLET FLOOR DRAIN BODY AND COLLAR ASSEMBLY

FUNCTION: General service side outlet floor drain for use in showers, toilets, kitchens and other finished areas where foot traffic is expected.

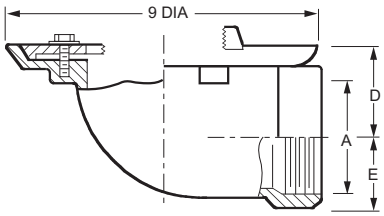

OUTLET VARIATIONS (Specify type of outlet and pipe size in inches.)

Outlet Type	Outlet Designation Outlet Type/Pipe Size	ADD
Inside Caulk	C04	N/C
Threaded	T02, T03, T04	N/C

A OUTLET SIZE	COLLAR DIA	D	E	†DUCO CI	GALV. CI (-G)	APPROX. WEIGHT LBS.
02"	9"	2 3/4"	1 1/4"	**524.00**	**775.00**	12
03"	9"	2 3/4"	2 1/4"	**524.00**	**775.00**	12
04"	9"	3 1/4"	3 1/4"	**642.00**	**893.00**	13

REGULARLY FURNISHED: Duco Cast Iron Body and Flashing Collar.

OPTIONS:		ADD
-P050	1/2" Trap Primer Conn	N/C
-P075	3/4" Trap Primer Conn	N/C

NOTE: For body with adjustable strainer head and 4" DIA funnel see Fig. 3520-F11, 3521-F11.

FIG. 2020 SIDE OUTLET - SHALLOW TRAP FLOOR DRAIN BODY AND COLLAR ASSEMBLY
FIG. 2021 SIDE OUTLET - SHALLOW TRAP FLOOR DRAIN BODY AND COLLAR ASSEMBLY

FUNCTION: General service side outlet floor drain for use in showers, toilets, kitchens and other finished areas where foot traffic is expected.

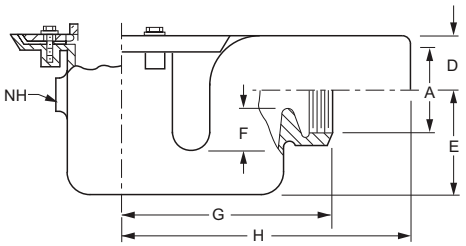

OUTLET VARIATIONS (Specify type of outlet and pipe size in inches.)

Outlet Type	Outlet Designation Outlet Type/Pipe Size	ADD
Spigot (2021)	S02, S03, S04	N/C
Threaded (2020)	T02, T03, T04	N/C

OPTIONS:		ADD
-NH	High Aux Inlet (Specify 1 1/2 or 2")	442.00
-P050	1/2" Trap Primer Conn	210.00
-P075	3/4" Trap Primer Conn	210.00

A OUTLET SIZE	D	E	F SEAL	G	H	†DUCO CI	GALV CI (-G)	APPROX WEIGHT LBS.
02"	1 3/4"	5"	2"	6 3/4"	9 1/2"	**724.00**	**1,258.00**	18
03"	2 1/4"	4 1/2"	2"	9"	12 1/4"	**724.00**	**1,258.00**	18
04"	3"	8 1/2"	2 1/2"	10"	12 3/4"	**1,142.00**	**1,676.00**	18

REGULARLY FURNISHED: Duco Cast Iron Body and Flashing Collar.

NOTE: For body with adjustable strainer head and 4" DIA funnel see Fig. 3520-F11, 3521-F11.

FIG. 2030 SIDE OUTLET - DEEP TRAP FLOOR DRAIN BODY AND COLLAR ASSEMBLY
FIG. 2031 SIDE OUTLET - DEEP TRAP FLOOR DRAIN BODY AND COLLAR ASSEMBLY

FUNCTION: General service side outlet floor drain for use in showers, toilets, kitchens and other finished areas where foot traffic is expected.

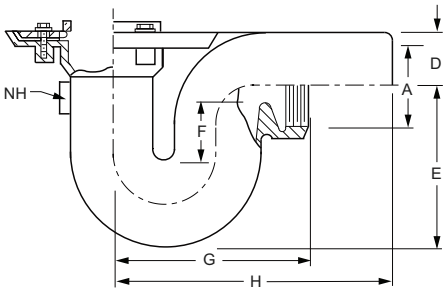

OUTLET VARIATIONS (Specify type of outlet and pipe size in inches.)

Outlet Type	Outlet Designation Outlet Type/Pipe Size	ADD
Spigot (2031)	S02, S03, S04	N/C
Threaded (2030)	T02, T03, T04	N/C

OPTIONS:		ADD
-NH	High Auxiliary Inlet (Specify 1 1/2 or 2")	442.00
-P050	1/2" Trap Primer Conn	210.00
-P075	3/4" Trap Primer Conn	210.00

A OUTLET SIZE	D	E	F SEAL	G	H	†DUCO CI	GALV CI (-G)	APPROX WEIGHT LBS.
02"	1 3/4"	5 1/4"	2"	5"	8"	**849.00**	**1,383.00**	18
03"	2"	7"	2 1/4"	8"	10"	**849.00**	**1,383.00**	18
04"	3"	8 1/2"	2 1/2"	10"	12"	**968.00**	**1,502.00**	18

REGULARLY FURNISHED: Duco Cast Iron Body and Flashing Collar.

NOTE: For body with adjustable strainer head and 4" DIA funnel see Fig. 3530-F11, 3531-F11.

†REGULARLY FURNISHED

FIG. 2038 FORMIT® DRAIN INSTALLATION DEVICE FOR SHOWER DRAINS

FUNCTION: The Jay R. Smith Mfg. Co.® Formit® Drain Installation Device is designed to stabilize the drain and provide adjustment during the installation process and allows final connection of outlet piping to drain after the concrete pour.

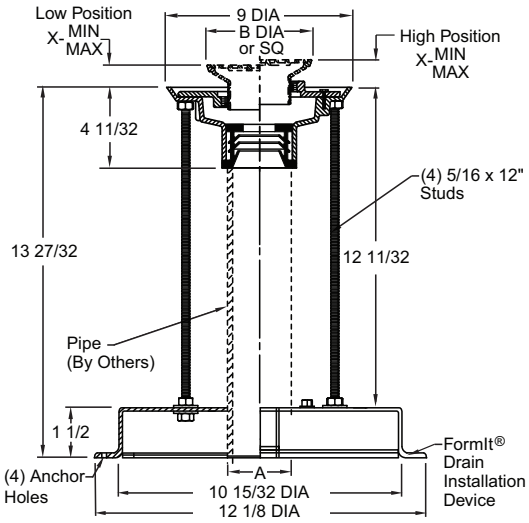

OUTLET SIZE	**BODY W/DRAIN INSTALLATION DEVICE
02	**421.00**
03	**421.00**
04	**421.00**

****Add price of strainer & options to price above.**

Fig. 2038 Stabilizer Device cannot be sold independently. It must be purchased with body.

OUTLET VARIATIONS (Specify type of outlet and pipe size in inches.)

Outlet Type	Outlet Designation Outlet Type/Pipe Size		ADD
Inside Caulk (2010)	C02, C03, C04	4"	**N/C**
Speedi-Set SW (2005)	L02, L03, L04	4"	**N/C**
Speedi-Set XH (2005)	LXH02, LXH03, LXH04	4"	**N/C**
Threaded (2010)	T02, T03, T04	3"	**99.00**
No-Hub (2005)	Y02, Y03, Y04	4"	**N/C**

OPTIONS:		ADD
-P050	1/2" Trap Primer Conn	**N/C**
-P075	3/4" Trap Primer Conn	**N/C**

For all other options, see Strainer Head Specified

STRAINER SIZE B	*COLLAR IN HIGH POSITION X		*COLLAR IN LOW POSITION X		FREE AREA SQ IN	
DIA OR SQ	MIN	MAX	MIN	MAX	ROUND	SQUARE
05	1 1/4	2 1/4	3/4	1 5/8	7	6.5
06	1 1/4	2 1/4	3/4	1 5/8	9	12.5
07	1 1/4	2 1/4	7/8	1 7/8	14	11
08	1 1/2	2 1/2	1	1 7/8	17	14
• 09	1 1/2	2 3/8	1	1 7/8	18	16
• 10	1 1/2	2 3/8	1	1 7/8	23	16

• Add 3/8" to min/max dimensions for round strainers.
*Collar is reversible to obtain extreme high and low strainer positions.

REGULARLY FURNISHED: Duco Cast Iron Body with Speedi-Set Outlet and **Adjustable Strainer Head (as specified) with Formit® Drain Installation Device and Hardware.

For available strainer heads, refer to Pages 155 to 162. (Additional charges will apply)

FIG. 2039-DID FORMIT® DRAIN INSTALLATION DEVICE FOR 8 1/2" & 12" DIA TOP CAST IRON FLOOR DRAINS

FUNCTION: The Jay R. Smith Mfg. Co.® Formit® Drain Installation Device is designed to stabilize the drain and provide adjustment during the installation process and allows final connection of outlet piping to drain after the concrete pour.

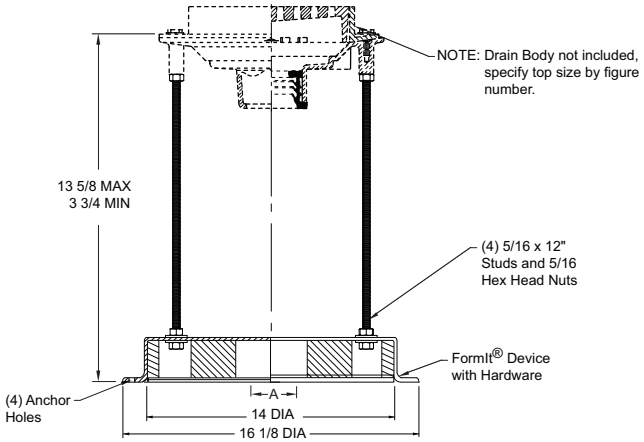

NOTE: For use with the following floor drains: 2110, 2120, 2220, 2310, 2320, 2350 and 2360. Refer to appropriate figure number for price.

For Pricing on 2039-DID only contact factory.

REGULARLY FURNISHED: Formit® Drain is Provided with Hardware. Stud Holes on 9 3/4" Bolt Circle for 8 1/2" Dia. Top Drain and 13 3/16" Bolt Circle for 12" Dia. Top Drains.

FIG. 2040 SIDE OUTLET - DEEP TRAP FLOOR DRAIN WITH FLOOR CLEANOUT BODY AND COLLAR ASSEMBLY
FIG. 2041 SIDE OUTLET - DEEP TRAP FLOOR DRAIN WITH FLOOR CLEANOUT BODY AND COLLAR ASSEMBLY

FUNCTION: General service side outlet floor drain for use in showers, toilets, kitchens and other finished areas where foot traffic is expected.

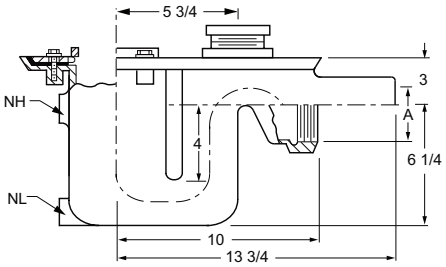

OUTLET VARIATIONS (Specify type of outlet and pipe size in inches.)

Outlet Type	Outlet Designation Outlet Type/Pipe Size	ADD
Spigot (2041)	S02, S03, S04	**N/C**
Threaded (2040)	T02, T03, T04	**N/C**

OPTIONS:		ADD
-NH	High Auxiliary Inlet (Specify 1 1/2 or 2")	**442.00**
-NL	Low Auxiliary Inlet (Specify 1 1/2 or 2")	**442.00**
-P050	1/2" Trap Primer Conn	**210.00**
-P075	3/4" Trap Primer Conn	**210.00**

REGULARLY FURNISHED:
Duco Cast Iron Body and Flashing Collar.

A OUTLET SIZE	†DUCO CI	GALV CI -(G)	APPROX WEIGHT LBS.
02, 03, 04"	**1,447.00**	**2,122.00**	12

NOTE: For body with adjustable strainer head and 4" DIA funnel see Fig. 3540-F11, 3541-F11.

†REGULARLY FURNISHED

FIG. 2050 - ADJUSTABLE FLOOR OR SHOWER DRAIN - FLASHING STRAINER TYPE

FUNCTION: Designed for clamping Altro Viny Traffic Flooring or other waterproofing materials at the finished floor level.

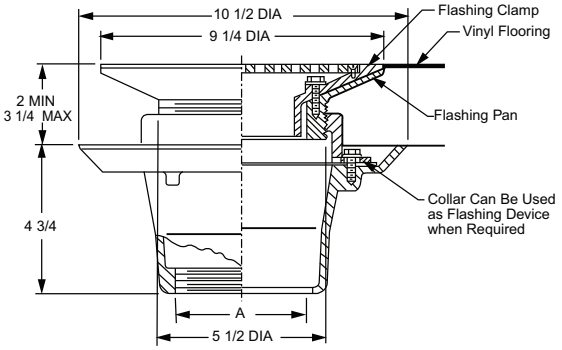

A OUTLET SIZE	TOP SIZE	FREE AREA SQ IN	†DUCO CI W/NB TOP	APPROX. WEIGHT LBS
*02"	9 1/4"	15	**2,604.00**	27
03"	9 1/4"	15	**2,604.00**	27
04"	9 1/4"	15	**2,604.00**	27

REGULARLY FURNISHED: Duco Cast Iron Body with Flashing Collar and Nickel Bronze Adjustable Strainer.

OUTLET VARIATIONS (Specify type of outlet and pipe size in inches.)

Outlet Type	Outlet Designation Outlet Type/Pipe Size	ADD
Inside Caulk	C02*, C03, C04	**N/C**
No-Hub	Y02, Y03, Y04	**See Fig. 2646Y for list add to THREADED body price**
Threaded	T02, T03, T04	**99.00**

OPTIONS:		ADD
-CP	Chrome Plated Top	**237.00**
-G	Galvanized Body	**251.00**
-P050	1/2" Trap Primer Conn	**N/C**
-P075	3/4" Trap Primer Conn	**N/C**
-R	Sump Receiver	**327.00**
-U	Vandal Proof Screws	**73.00**
		DEDUCT
-PB	Polished Bronze Top	**279.00**

*2" Inside Caulk Outlet only available by using 3" Inside Caulk Outlet with Caulk Reducer.

FIG. 2051 - FLOOR OR SHOWER DRAIN - FLASHING STRAINER TYPE

FUNCTION: Designed for clamping Altro Viny Traffic Flooring or other waterproofing materials at the finished floor level.

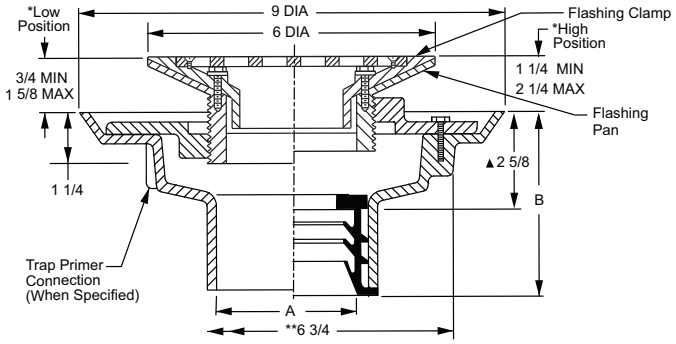

A OUTLET SIZE	TOP SIZE	FREE AREA SQ IN	†DUCO CI W/NB TOP	APPROX. WEIGHT LBS
02"	6"	7	**1,901.00**	11
03"	6"	7	**1,901.00**	11
04"	6"	7	**1,901.00**	11
▲▲05"	6"	7	**2,605.00**	12
▲▲06"	6"	7	**2,605.00**	14

REGULARLY FURNISHED: Duco Cast Iron Body with Flashing Collar and Adjustable Flashing Type Nickel Bronze Strainer.

OUTLET VARIATIONS (Specify type of outlet and pipe size in inches.)

Outlet Type	Outlet Designation Outlet Type/Pipe Size	Body HT. DIM.	ADD
Speedi-Set SW	L02, L03, L04	4"	**N/C**
Speedi-Set XH	LXH02, LXH03, LXH04	4"	**N/C**
No-Hub	Y02, Y03, Y04, Y05, Y06	4"	**N/C**
Threaded	T03, T04	3"	**99.00**

OPTIONS:		ADD
-CP	Chrome Plated Top	**180.00**
-G	Galvanized Body	**251.00**
-P050	1/2" Trap Primer Conn	**N/C**
-P075	3/4" Trap Primer Conn	**N/C**
-R	Sump Receiver	**327.00**
-U	Vandal Proof Screws	**70.00**
		DEDUCT
-PB	Polished Bronze Top	**202.00**

** MIN 6 3/4" hole required for core drilled application.
▲ This dimension to internal stop of Speedi-Set Gasket Collar is reversible to obtain extreme high and low strainer positions.
▲▲NOTE: 5 & 6" outlet sizes available in No-Hub outlet only.

SUFFIX A - ADJUSTABLE STRAINER WITH ROUND GRATE

FUNCTION: Used in finished floors where foot traffic is anticipated.

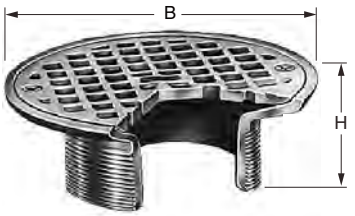

B TOP SIZE	H	PB TOP	†NB TOP	CP TOP	APPROX. WEIGHT LBS
05"	2"	**340.00**	**370.00**	**402.00**	3
06"	2"	**438.00**	**511.00**	**561.00**	4
07"	2 1/4"	**581.00**	**626.00**	**685.00**	5
08"	2 1/2"	**792.00**	**849.00**	**936.00**	6
09"	2 1/2"	**1,172.00**	**1,248.00**	**1,371.00**	9
10"	2 3/4"	**1,172.00**	**1,248.00**	**1,372.00**	12

REGULARLY FURNISHED: Adjustable Round Strainer with Secured Grate.

OPTIONS:		ADD
-B	Sediment Bucket	**139.00**
-BFV	Ball Float Backwater Valve	**485.00**
-H	Hinged Grate (6, 7 and 8" only)	**356.00**
-HP	Heel Proof Grate	**N/C**
-U	Vandal Proof Screws	**70.00**
-V	Flapper Backwater Valve	**485.00**

List price for complete strainer & grate

A05NBSS	5" NB Strainer w/SS Top	**1,540.00**
-HP	Heelproof	**132.00**
A06NBSS	6" NB Strainer w/SS Top	**1,564.00**
-HP	Heelproof	**168.00**

†REGULARLY FURNISHED

SUFFIX B - ADJUSTABLE STRAINER WITH SQUARE GRATE

FUNCTION: Used in finished floors where foot traffic is anticipated.

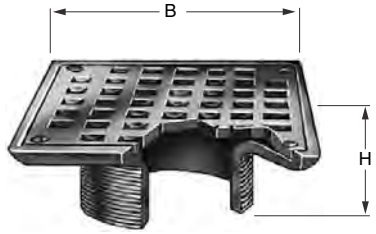

B TOP SIZE	H	PB TOP	†NB TOP	CP TOP	APPROX. WEIGHT LBS
05 x 05"	2"	**512.00**	**582.00**	**637.00**	2
06 x 06"	2"	**630.00**	**675.00**	**747.00**	3
07 x 07"	2 1/4"	**790.00**	**860.00**	**947.00**	5
08 x 08"	2 1/2"	**963.00**	**1,092.00**	**1,191.00**	7
09 x 09"	2 1/4"	**1,300.00**	**1,447.00**	**1,586.00**	8
10 x 10"	2 1/4"	**1,739.00**	**1,882.00**	**2,074.00**	12

REGULARLY FURNISHED: Adjustable Square Strainer with Secured Grate.

OPTIONS:		ADD
-B	Sediment Bucket	**139.00**
-BFV	Ball Float Backwater Valve	**485.00**
-H	Hinged Grate	**353.00**
-HP	Heelproof Grate	**N/C**
-U	Vandal Proof Screws	**70.00**
-V	Flapper Backwater Valve	**485.00**

List price for complete strainer & grate

B05NBSS	5" NB Strainer w/SS Top	**1,739.00**
-HP	Heelproof	**171.00**
B06NBSS	6" NB Strainer w/SS Top	**1,810.00**
-HP	Heelproof	**175.00**

FLOOR DRAINS

SUFFIX BS - ADJUSTABLE STRAINER WITH SQUARE HINGED SOLID COVER

FUNCTION: Used in areas where intermittent use is required. The solid cover prevents intrusion of chips, sawdust, etc., which are swept up before cover is opened for washdown.

TOP SIZE	PB TOP	†NB TOP	CP TOP	APPROX. WEIGHT LBS
06 x 06"	**1,145.00**	**1,345.00**	**1,482.00**	4

REGULARLY FURNISHED: Adjustable Square Strainer with Solid Hinged Cover.

OPTIONS:		ADD
-B	Sediment Bucket	**POA**
-GC	Gasketed Water Tight	**104.00**
-SEC	Secured Cover	**70.00**
-SG	Secondary Strainer Grate	**79.00**
-U	Vandal Proof Screws	**70.00**

SUFFIX C - ADJUSTABLE STRAINER WITH ROUND REINFORCED GRATE

FUNCTION: Used in finished floors where light wheeled loads are anticipated.

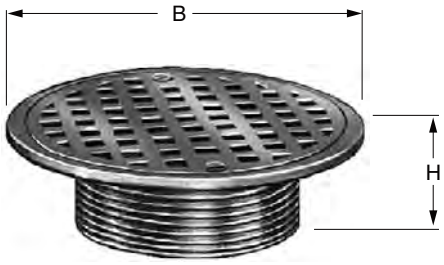

B TOP SIZE	H	PB TOP	†NB TOP	CP TOP	APPROX. WEIGHT LBS
05"	2"	**612.00**	**640.00**	**670.00**	4
06"	2"	**704.00**	**777.00**	**825.00**	6
08"	2 1/2"	**1,055.00**	**1,110.00**	**1,186.00**	8
10"	2 3/4"	**1,436.00**	**1,512.00**	**1,638.00**	10

REGULARLY FURNISHED: Adjustable Round Strainer with Reinforced Secured Grate.

OPTIONS:		ADD
-B	Sediment Bucket	**139.00**
-BFV	Ball Float Backwater Valve	**485.00**
-U	Vandal Proof Screws	**70.00**
-V	Flapper Backwater Valve	**485.00**

†REGULARLY FURNISHED

FLOOR DRAINS

SUFFIX DXA - ADJUSTABLE WIDE FLANGE STRAINER WITH ROUND GRATE
SUFFIX DXB - ADJUSTABLE WIDE FLANGE STRAINER WITH SQUARE GRATE

FUNCTION: Used in any floor or shower area. Four inch wide flange allows ample surface adhesion of traffic bearing deck covering.

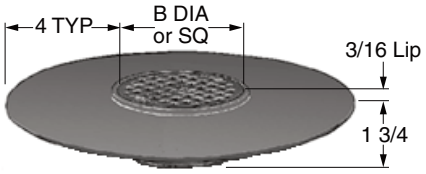

OPTIONS: **ADD**

-B	Sediment Bucket	**139.00**
-LWH	Less Weep Holes (Specify Reversible Collar Less Weep Holes)	**N/C**
-SH	Securing Holes in Flange	**156.00**
-U	Vandal Proof Screws	**70.00**

REGULARLY FURNISHED: Adjustable Wide Flange Strainer with Round (A) or Square (B) Secured Grate.

B TOP SIZE	PB TOP	†NB TOP	CP TOP	APPROX. WEIGHT LBS
05"	**1,472.00**	**1,541.00**	**1,696.00**	18
06"	**1,472.00**	**1,541.00**	**1,696.00**	20

SUFFIX D, E - ADJUSTABLE STRAINER WITH ROUND REINFORCED TRACTOR GRATE

FUNCTION: Used in finished floors where light weight wheeled loads are anticipated and loose set non-tilt tractor grate is desired.

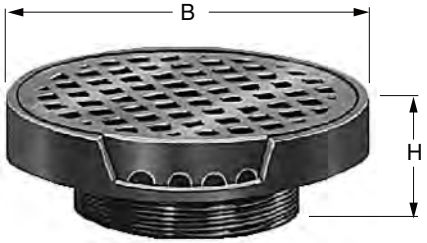

OPTIONS: **ADD**

-B	Sediment Bucket	**139.00**
-BFV	Ball Float Backwater Valve	**485.00**
-U	Vandal Proof Screws	**70.00**
-V	Flapper Backwater Valve	**485.00**

REGULARLY FURNISHED: Adjustable Strainer with Round Reinforced Tractor Grate.

STRAINER SUFFIX	B TOP SIZE	H	†DUCO CI	PB TOP	NB TOP	CP TOP	APPROX. WEIGHT LBS
D	07"	3 1/4"	**446.00**	**1,063.00**	**1,185.00**	**1,300.00**	10
E	09"	3 1/2"	**607.00**	**1,602.00**	**1,747.00**	**1,916.00**	13

SUFFIX F - ADJUSTABLE TILE FLANGE STRAINER WITH ROUND GRATE

FUNCTION: Provides integral flange set 5/32" below rim to receive floor covering. Flange may have option of tapped holes for securing pan and gasket.

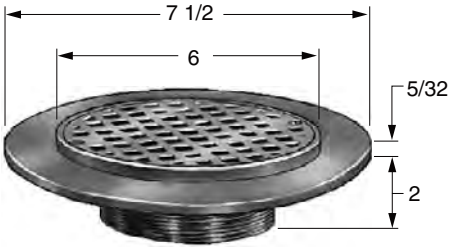

OPTIONS: **ADD**

-B	Sediment Bucket	**139.00**
-BFV	Ball Float Backwater Valve	**485.00**
-SH	Tapped Holes in Flange	**156.00**
-U	Vandal Proof Screws	**70.00**
-V	Flapper Backwater Valve	**485.00**

REGULARLY FURNISHED: Adjustable Tile Flange Strainer with Round Secured Grate.

TOP SIZE	PB TOP	†NB TOP	CP TOP	APPROX. WEIGHT LBS
6"	**1,064.00**	**1,189.00**	**1,306.00**	5

SUFFIX F37, F38 - ADJUSTABLE STRAINER WITH ROUND RECESSED GRATE

FUNCTION: Used in a non-traffic area when a funnel type strainer head is required and space does not allow use of the 3500 Series funnel. The extended rim allows use as an anti-flood and anti-splash drip pan.

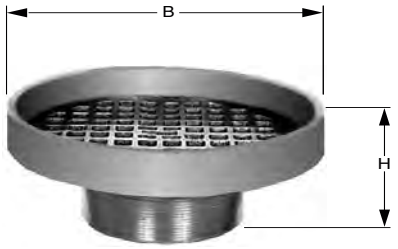

OPTIONS: **ADD**

-B	Sediment Bucket	**139.00**
-G	Galvanized, F37 (add to CI)	**180.00**
-G	Galvanized, F38 (add to CI)	**422.00**
-U	Vandal Proof Screws	**70.00**

STRAINER SUFFIX	B TOP SIZE	H	†DUCO CI	PB TOP	NB TOP	CP TOP	APPROX. WEIGHT LBS
F37	07"	3 1/4"	**442.00**	**1,067.00**	**1,187.00**	**1,306.00**	10
F38	09"	3 1/2"	**607.00**	**1,602.00**	**1,765.00**	**1,936.00**	13

REGULARLY FURNISHED: Adjustable Round Strainer with Anti-Flood Rim and Grate.

†REGULARLY FURNISHED

SUFFIX G - ADJUSTABLE STRAINER WITH ROUND LOW DOME GRATE

FUNCTION: Used in gutters and recessed areas where excessive debris build-up is expected. Dome insures drainage even when partly covered.

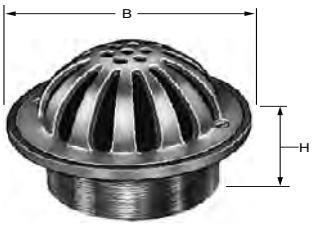

REGULARLY FURNISHED: Adjustable Round Strainer with Secured Dome Grate.

OPTIONS: ADD

-B Sediment Bucket **139.00**
-BFV Ball Float Backwater Valve **485.00**
-MS SS Mesh on Dome **301.00**
-U Vandal Proof Screws **70.00**
-V Flapper Backwater Valve **485.00**

B TOP SIZE	H	PB TOP	†NB TOP	CP TOP	APPROX. WEIGHT LBS
05"	2"	**576.00**	**626.00**	**685.00**	3
06"	2"	**698.00**	**798.00**	**871.00**	4
08"	2 1/2"	**990.00**	**1,063.00**	**1,167.00**	7

SUFFIX H - ADJUSTABLE STRAINER WITH ROUND SOLID HINGED COVER

FUNCTION: Used in areas where intermittent drain use is required. Solid cover prevents intrusion of chips, sawdust, etc., which are swept up before cover is opened for washdown. The secondary strainer prevents debris from entering the waste line.

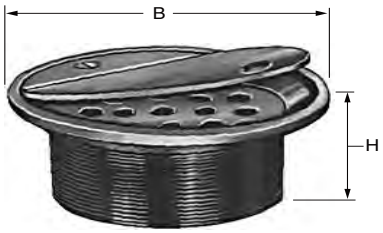

REGULARLY FURNISHED: Adjustable Round Strainer with Hinged Solid Cover and Secondary Strainer.

OPTIONS: ADD

-BFV Ball Float Backwater Valve **485.00**
-U Vandal Proof Screws **70.00**
-V Flapper Backwater Valve **485.00**

B TOP SIZE	H	PB TOP	†NB TOP	CP TOP	APPROX. WEIGHT LBS
05"	2"	**797.00**	**868.00**	**947.00**	4
06"	2"	**855.00**	**994.00**	**1,094.00**	5
07"	2 1/4"	**1,353.00**	**1,541.00**	**1,697.00**	6
08"	2 1/2"	**1,425.00**	**1,564.00**	**1,727.00**	7

SUFFIX J - ADJUSTABLE STRAINER WITH ROUND SPANNER WRENCH COVER

FUNCTION: Solid gas tight, vandal proof, threaded cover for areas where intermittent drain use is required.

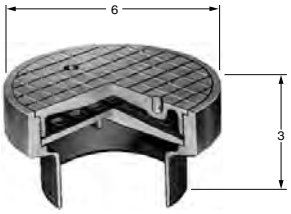

REGULARLY FURNISHED: Adjustable Round Strainer with Spanner Wrench Cover and Secondary Strainer.

OPTIONS: ADD

-B Sediment Bucket **139.00**
-BFV Ball Float Backwater Valve **485.00**
-SC Smooth Cover **262.00**
-SW Spanner Wrench **177.00**
-V Flapper Backwater Valve **485.00**

TOP SIZE	PB TOP	†NB TOP	CP TOP	APPROX. WEIGHT LBS
06"	**1,107.00**	**1,205.00**	**1,328.00**	6

SUFFIX K - ADJUSTABLE STRAINER WITH SQUARE REINFORCED GRATE

FUNCTION: Used in finished floors where some light wheeled traffic is anticipated.

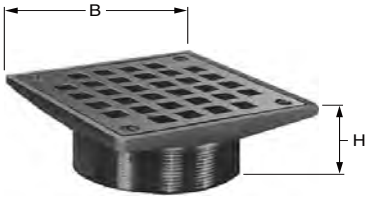

REGULARLY FURNISHED: Adjustable Square Strainer with Reinforced Secured Grate

OPTIONS: ADD

-B Sediment Bucket **139.00**
-BFV Ball Float Backwater Valve **485.00**
-U Vandal Proof Screws **70.00**
-V Flapper Backwater Valve **485.00**

B TOP SIZE	H	PB TOP	†NB TOP	CP TOP	APPROX. WEIGHT LBS
05 x 05"	2"	**658.00**	**717.00**	**793.00**	5
06 x 06"	2"	**827.00**	**886.00**	**965.00**	7
07 x 07"	2 1/4"	**990.00**	**1,047.00**	**1,146.00**	8
08 x 08"	2 1/2"	**1,228.00**	**1,345.00**	**1,482.00**	9

SUFFIX L, M, N, P, R, T - ADJUSTABLE STRAINER WITH RECTANGULAR GRATE

FUNCTION: Used in shower room, gutters and similar areas where large grate free area is required and limited width is available.

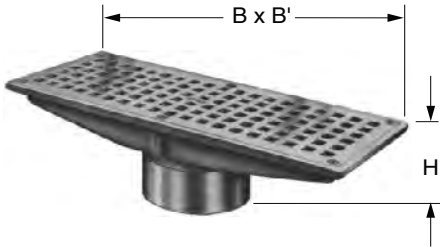

REGULARLY FURNISHED: Adjustable Rectangular Strainer with Secured Grate.

OPTIONS: ADD

-B Sediment Bucket **139.00**
-U Vandal Proof Top **70.00**

STRAINER SUFFIX	B x B TOP SIZE	H	PB TOP	†NB TOP	CP TOP	APPROX. WEIGHT LBS
L	4 1/2 x 8"	2 1/4"	**1,011.00**	**1,110.00**	**1,218.00**	8
M	4 x 12"	2 1/2"	**1,185.00**	**1,391.00**	**1,528.00**	10
N	5 x 9"	2 1/4"	**1,011.00**	**1,110.00**	**1,218.00**	12
P	5 x 13"	3"	**1,420.00**	**1,594.00**	**1,750.00**	15
R	6 x 10"	2 1/4"	**1,420.00**	**1,594.00**	**1,750.00**	17
T	5 x 17"	3"	**1,550.00**	**1,714.00**	**1,888.00**	20

†REGULARLY FURNISHED

SUFFIX V, W - ADJUSTABLE STRAINER WITH ANGLE GRATE

FUNCTION: Shower room drain set at wall and floor junction. Vertical grate openings prevent drain stoppage should flat surface become covered.

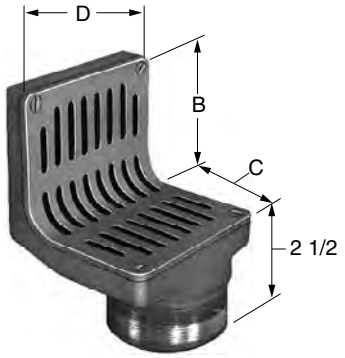

OPTIONS: **ADD**

-U Vandal Proof Top **70.00**

STRAINER SUFFIX	TOP SIZE B	C	D	PB TOP	†NB TOP	CP TOP	APPROX. WEIGHT LBS
V	3 1/2"	3 1/2"	4 1/2"	**2,075.00**	**2,266.00**	**2,503.00**	10
W	6 3/4"	6 3/4"	6 1/2"	**2,660.00**	**2,900.00**	**3,183.00**	19

REGULARLY FURNISHED: Adjustable Angle Strainer with Secured Grate.

SUFFIX X - ADJUSTABLE STRAINER EXTENSION ADAPTOR

FUNCTION: Used when strainer head must be raised to meet deeper floor fill.

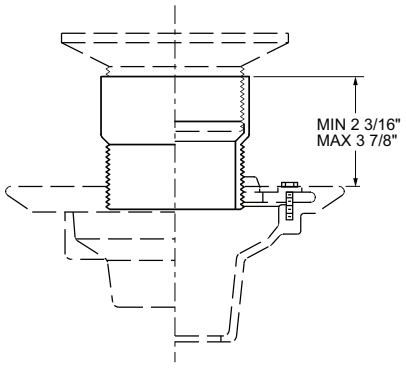

†DUCO CI (2010X)	GALV CI (2010XG)	CAST BRONZE (2010XCB)	APPROX. WEIGHT LBS
177.00	**391.00**	**652.00**	5

REGULARLY FURNISHED: Duco Cast Iron Adjustable Extension Adaptor.

NOTE: Extensions can be stacked for increased maximum adjustment.

SUFFIX Y, Z - ADJUSTABLE OVERFLOW STRAINER WITH STANDPIPE

FUNCTION: Used as overflow drain in decorative pools, fish ponds or similar areas. Dome prevents floating objects from entering drain line.

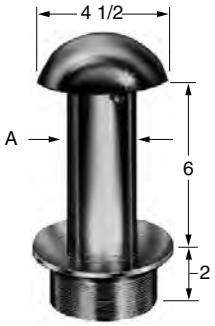

OPTIONS: **ADD**

-Higher Standpipe, over 6"	PB	NB	CP
Suffix Y, per inch	**123.00**	**174.00**	**185.00**
Suffix Z, per inch	**215.00**	**246.00**	**264.00**

STRAINER SUFFIX	STANDPIPE A DIA	HEIGHT	PB TOP	†NB TOP	CP TOP	APPROX. WEIGHT LBS
Y	2"	6"	**1,885.00**	**2,266.00**	**2,503.00**	9
Z	3"	6"	**2,660.00**	**2,900.00**	**3,183.00**	15

REGULARLY FURNISHED: Adjustable Overflow Strainer with Standpipe and Dome.

SUFFIX -69 - HEAVY DUTY ADJUSTABLE STRAINER

FUNCTION: Used in finished floors where light wheeled loads or heavy foot traffic are anticipated.

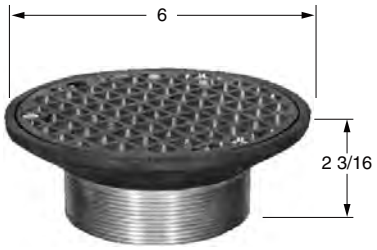

OPTIONS: **ADD**

-B Sediment Bucket **139.00**
-BFV Ball Float Backwater Valve **485.00**
-U Vandal Proof Grate **70.00**
-V Flapper Type Backwater Valve **485.00**

TOP SIZE	RB TOP	PB TOP	†NB TOP	APPROX. WEIGHT LBS
6"	**819.00**	**880.00**	**954.00**	5

REGULARLY FURNISHED: Adjustable Round Strainer with Heavy Duty Grate.

†REGULARLY FURNISHED

FIG. 2016 PENAL USE VANDAL PROOF SHOWER DRAIN

FUNCTION: General service floor drain with internal trap seal and side outlet.

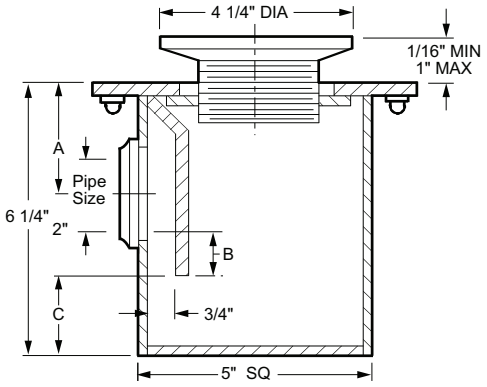

OUTLET VARIATIONS (Specify type of outlet and pipe size in inches.)

Outlet Type	Outlet Designation Outlet Type/Pipe Size	ADD
Threaded	T0150, T02, T03	**POA**

OUTLET SIZE	A	B (TRAP SEAL)	C	†PB TOP	NB TOP	CP TOP	APPROX. WEIGHT LBS
0150"	2 1/2"	1 1/4"	1 3/4"	**POA**	**POA**	**POA**	25
02"	2 1/2"	1"	1 3/4"	**POA**	**POA**	**POA**	25
03"	3"	1/2"	1 1/4"	**POA**	**POA**	**POA**	25

REGULARLY FURNISHED: Galvanized Fabricated Steel Body, Flanged Deck Top, Vandal Proof Polished Bronze Adjustable Strainer Head, Integral Trap and Threaded Outlet.

FIG. 2095 MULTI-INLET ADJUSTABLE FLOOR DRAIN WITH TRAP

FUNCTION: General service floor drain with internal trap seal and auxiliary inlets for use in showers, toilets, kitchens and other finished areas where foot traffic is expected. The optional auxiliary inlets allows for connecting of additional drain lines.

Photo shown w/Suffix A Strainer Head

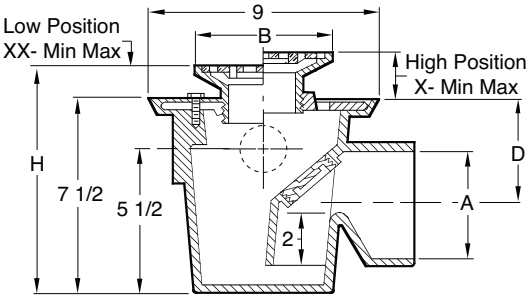

OUTLET VARIATIONS (Specify type of outlet and pipe size in inches.)

Outlet Type	Outlet Designation Outlet Type/Pipe Size	ADD
No-Hub	Y02, Y03, Y04	**N/C**

OPTIONS:		ADD
-G	Galvanized CI	**480.00**
-N	Auxiliary Inlet (each)	**246.00**
-U	Vandal Proof Grate	**70.00**

Drain Body Only	Duco CI
02, 03"	**1,082.00**
04"	**1,198.00**

A OUTLET SIZE	B STRAINER SIZE	D	COLLAR IN HIGH POSITION X MIN	MAX	COLLAR IN LOW POSITION XX MIN	MAX	FREE AREA SQ. IN.	H MIN	BODY WITH PB TOP	BODY WITH NB TOP	BODY WITH CP TOP	APPROX. WEIGHT LBS
02"	5" DIA.	3 3/16"	1 1/4"	2 1/4"	3/4"	1 5/8"	7	8 1/4"	**1,425.00**	**1,452.00**	**1,493.00**	35
03"	5" DIA.	3 11/16"	1 1/4"	2 1/4"	3/4"	1 5/8"	7	8 1/4"	**1,425.00**	**1,452.00**	**1,493.00**	35
04"	5" DIA.	4 3/16"	1 1/4"	2 1/4"	3/4"	1 5/8"	7	8 1/4"	**1,541.00**	**1,568.00**	**1,609.00**	35
02"	6" DIA.	3 3/16"	1 1/4"	2 1/4"	3/4"	1 5/8"	9	8 1/4"	**1,522.00**	**1,593.00**	**1,643.00**	36
03"	6" DIA.	3 11/16"	1 1/4"	2 1/4"	3/4"	1 5/8"	9	8 1/4"	**1,522.00**	**1,593.00**	**1,643.00**	36
04"	6" DIA.	4 3/16"	1 1/4"	2 1/4"	3/4"	1 5/8"	9	8 1/4"	**1,638.00**	**1,709.00**	**1,759.00**	36
02"	5" SQ.	3 3/16"	1 1/4"	2 1/4"	3/4"	1 5/8"	6.5	8 1/4"	**1,593.00**	**1,664.00**	**1,719.00**	35
03"	5" SQ.	3 11/16"	1 1/4"	2 1/4"	3/4"	1 5/8"	6.5	8 1/4"	**1,593.00**	**1,664.00**	**1,719.00**	35
04"	5" SQ.	4 3/16"	1 1/4"	2 1/4"	3/4"	1 5/8"	6.5	8 1/4"	**1,709.00**	**1,780.00**	**1,835.00**	35
02"	6" SQ.	3 3/16"	1 1/4"	2 1/4"	3/4"	1 5/8"	12.5	8 1/4"	**1,713.00**	**1,757.00**	**1,827.00**	36
03"	6" SQ.	3 11/16"	1 1/4"	2 1/4"	3/4"	1 5/8"	12.5	8 1/4"	**1,713.00**	**1,757.00**	**1,827.00**	36
04"	6" SQ.	4 3/16"	1 1/4"	2 1/4"	3/4"	1 5/8"	12.5	8 1/4"	**1,829.00**	**1,873.00**	**1,943.00**	36

REGULARLY FURNISHED: Duco Cast Iron Body with Integral Trap and 1" NPT Plug and Flashing Collar and Adjustable Strainer Head as Indicated by Suffix Letter Selected.

†REGULARLY FURNISHED

FIG. 2110 MEDIUM DUTY FLOOR DRAIN WITH 8 1/2" ROUND TOP

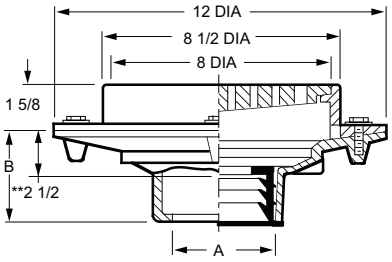

**This dimension to internal stop of Speedi-Set Gasket

A OUTLET SIZE	TOP SIZE	FREE AREA SQ IN	†DUCO CI	DUCO CI PB TOP	DUCO CI NB TOP	APPROX. WEIGHT LBS
02, 03, 04"	8 1/2"	14.25	**652.00**	**1,215.00**	**1,345.00**	24
05, 06"	8 1/2"	14.25	**826.00**	**1,389.00**	**1,519.00**	30

REGULARLY FURNISHED: Duco Cast Iron Body and Flashing Collar with Cast Iron Bar Grate.

OUTLET VARIATIONS (Specify type of outlet and pipe size in inches.)

Outlet Type	Outlet Designation Outlet Type/Pipe Size	"B" Body HT. DIM.	ADD
Inside Caulk	C02, C03, C04	3 3/4"	**N/C**
Speedi-Set SW	L02, L03, L04	3 3/4"	**N/C**
Speedi-Set XH	LXH02, LXH03, LXH04	3 3/4"	**N/C**
Threaded	T02, T03, T04, T05	2"	**99.00**
No-Hub	Y02, Y03, Y04, Y05, Y06	3 3/4"	**N/C**

OPTIONS:		ADD
-B	Sediment Bucket	**177.00**
-BG	Galv Sediment Bucket	**252.00**
-D	Dome Grate, CI	**104.00**
-DID*	Drain Installation Device	**265.00**
-DNB	Dome Grate, add to CI	**1,171.00**
-DPB	Dome Grate, add to CI	**931.00**
-FBS	Alum Flat Bottom Strainer	**87.00**
-G	Galvanized CI	**545.00**
-H	Hinged Grate	**327.00**
-M	Ductile Iron Grate	**271.00**
-P	Trap Primer Conn***	**210.00**
-S	Square Top (Add for CI only. For NB or PB, see below)	**414.00**
-SNB	Square Top, add to CI	**1,205.00**
-SPB	Square Top, add to CI	**998.00**
-U	Vandal Proof Grate	**188.00**
-XP	Closure Plug, 02, 03"	**507.00**
	04"	**847.00**
	05, 06"	**N/A**

*Requires body modifications. Must be shipped complete w/drain from the factory.
***Not available on 2110T Threaded Option

FIG. 2115 MEDIUM DUTY FLOOR DRAIN WITH 8 1/2" ROUND TOP

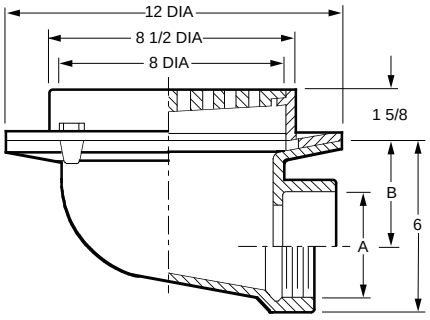

A OUTLET SIZE	TOP SIZE	FREE AREA SQ IN	B	†DUCO CI	DUCO CI PB TOP	DUCO CI NB TOP	APPROX. WEIGHT LBS
02"	8 1/2"	14.25	4 1/4	**1,205.00**	**1,768.00**	**1,898.00**	33
03"	8 1/2"	14.25	3 3/4	**1,205.00**	**1,768.00**	**1,898.00**	33
04"	8 1/2"	14.25	3 1/4	**1,205.00**	**1,768.00**	**1,898.00**	33

REGULARLY FURNISHED: Duco Cast Iron Body and Flashing Collar with Cast Iron Bar Grate.

OUTLET VARIATIONS (Specify type of outlet and pipe size in inches.)

Outlet Type	Outlet Designation Outlet Type/Pipe Size	Body HT. DIM.	ADD
Inside Caulk	C02, C03, C04	6"	**N/C**
Threaded	T02, T03, T04	6"	**N/C**
No-Hub			**See Fig. 2646Y for list add**

OPTIONS:		ADD
-B	Sediment Bucket	**177.00**
-BG	Galv Sediment Bucket	**252.00**
-D	Dome Grate, CI	**104.00**
-DNB	Dome Grate, add to CI	**1,171.00**
-DPB	Dome Grate, add to CI	**931.00**
-G	Galvanized CI	**545.00**
-H	Hinged Grate	**327.00**
-M	Ductile Iron Grate	**271.00**
-P	Trap Primer Conn	**210.00**
-S	Square Top (Add for CI only. For NB or PB, see below)	**414.00**
-SNB	Square Top, add to CI	**1,205.00**
-SPB	Square Top, add to CI	**998.00**
-U	Vandal Proof Grate	**188.00**

†REGULARLY FURNISHED

FIG. 2120 MEDIUM DUTY FLOOR DRAIN WITH 8 1/2" ROUND TOP W/ TRACTOR GRATE

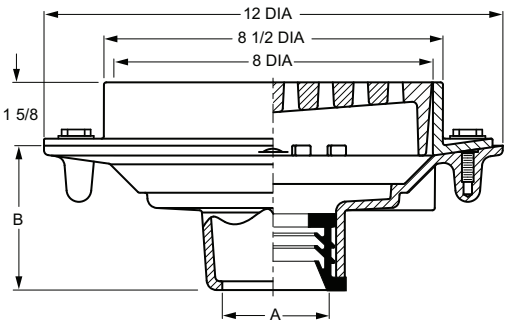

A OUTLET SIZE	TOP SIZE	FREE AREA SQ IN	†DUCO CI	DUCO CI PB TOP	DUCO CI NB TOP	APPROX. WEIGHT LBS
02, 03, 04"	8 1/2"	13	**854.00**	**1,417.00**	**1,569.00**	21

REGULARLY FURNISHED: Duco Cast Iron Body and Flashing Collar with Medium Duty Cast Iron Tractor Grate.

For Heavy Duty: Specify Ductile Iron Grate -M

OUTLET VARIATIONS (Specify type of outlet and pipe size in inches.)

Outlet Type	Outlet Designation Outlet Type/Pipe Size	"B" Body HT. DIM.	ADD
Inside Caulk	C02, C03, C04	3 3/4"	**N/C**
Speedi-Set SW	L02, L03, L04	3 3/4"	**N/C**
Speedi-Set XH	LXH02, LXH03, LXH04	3 3/4"	**N/C**
Threaded	T02, T03, T04	2"	**99.00**
No-Hub	Y02, Y03, Y04	3 3/4"	**N/C**
No-Hub	Y06	3 3/4"	**174.00**

OPTIONS:		ADD
-B	Sediment Bucket	**177.00**
-BG	Galv Sediment Bucket	**252.00**
-DID*	Drain Installation Device	**265.00**
-FBS	Alum Flat Bottom Strainer	**87.00**
-G	Galvanized CI	**545.00**
-M	Ductile Iron Grate	**274.00**
-P	Trap Primer Conn**	**210.00**
-S	Square Top (Add for CI only. For NB or PB, see below)	**414.00**
-SNB	Square Top, add to CI	**1,205.00**
-SPB	Square Top, add to CI	**998.00**
-U	Vandal Proof Grate	**188.00**
-XP	Closure Plug, 02", 03"	**507.00**
	04"	**847.00**

*Requires body modifications. Must be shipped complete w/drain from the factory.
**Not available on 2120T Threaded Option.

FIG. 2125 MEDIUM DUTY FLOOR DRAIN WITH 8 1/2" ROUND TOP W/TRACTOR GRATE

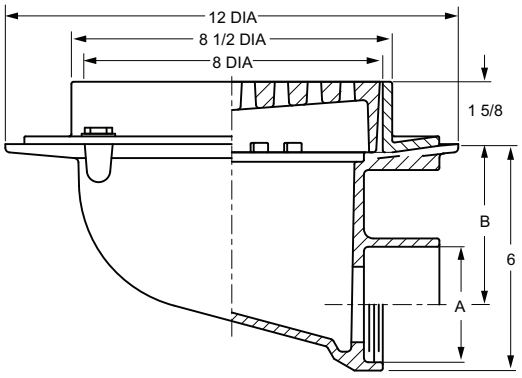

A OUTLET SIZE	TOP SIZE	FREE AREA SQ IN	B	†DUCO CI	DUCO CI PB TOP	DUCO CI NB TOP	APPROX. WEIGHT LBS
02"	8 1/2"	13	4 1/4	**1,410.00**	**1,973.00**	**2,125.00**	21
03"	8 1/2"	13	3 3/4	**1,410.00**	**1,973.00**	**2,125.00**	21
04"	8 1/2"	13	3 1/4	**1,410.00**	**1,973.00**	**2,125.00**	21

REGULARLY FURNISHED: Duco Cast Iron Body and Flashing Collar with Medium Duty Cast Iron Tractor Grate.

For Heavy Duty: Specify Ductile Iron Grate -M

OUTLET VARIATIONS (Specify type of outlet and pipe size in inches.)

Outlet Type	Outlet Designation Outlet Type/Pipe Size	ADD
Inside Caulk	C02, C03, C04, C05, C06	**N/C**
Threaded	T02, T03, T04, T05, T06	**N/C**
No-Hub		**See Fig. 2646Y for list add**

OPTIONS:		ADD
-B	Sediment Bucket	**177.00**
-BG	Galv Sediment Bucket	**252.00**
-G	Galvanized CI	**545.00**
-M	Ductile Iron Grate	**274.00**
-P	Trap Primer Conn	**210.00**
-S	Square Top (Add for CI only. For NB or PB, see below)	**414.00**
-SNB	Square Top, add to CI	**1,205.00**
-SPB	Square Top, add to CI	**998.00**
-U	Vandal Proof Grate	**188.00**

†REGULARLY FURNISHED

FIG. 2130 MEDIUM DUTY FLOOR DRAIN WITH 12" ROUND TOP

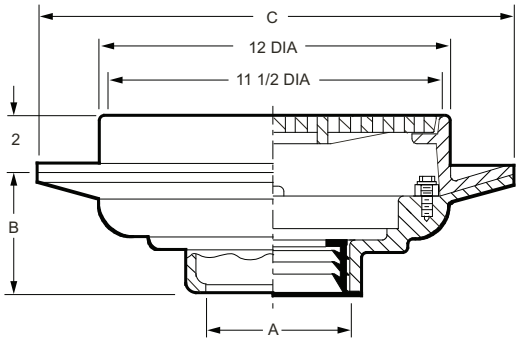

*A OUTLET SIZE	TOP SIZE	FREE AREA SQ IN	C DIA.	†DUCO CI	DUCO CI PB TOP	DUCO CI NB TOP	APPROX. WEIGHT LBS
02, 03, 04"	12"	28.5	16"	**1,636.00**	**2,470.00**	**2,602.00**	45
05, 06"	12"	28.5	16"	**1,636.00**	**2,470.00**	**2,602.00**	45

*Priced for Caulk Outlet. See Outlet Types for variations.

REGULARLY FURNISHED: Duco Cast Iron Body and Flashing Collar with Cast Iron Bar Grate.

OUTLET VARIATIONS (Specify type of outlet and pipe size in inches.)

Outlet Type	Outlet Designation Outlet Type/Pipe Size	"B" Body HT. DIM.	ADD
Inside Caulk	C02, C03, C04, C05, C06	3 3/4"	**N/C**
Speedi-Set SW	Not Available		**Specify Fig. 2131**
Speedi-Set XH	Not Available		**Specify Fig. 2131**
Threaded	T02, T03, T04, T05, T06	3 3/4"	**99.00**
No-Hub	Not Available		**N/C**

OPTIONS:		ADD
-B	Sediment Bucket (Caulk & Threaded)	**327.00**
-D	Dome Grate, CI	**177.00**
-DG	Deflector Grate, CI	**511.00**
-DID	Drain Installation Device	**458.00**
-DNB	Dome Grate, add to CI	**1,592.00**
-DPB	Dome Grate, add to CI	**1,367.00**
-FBSCI	Flat Bottom Strainer, CI	**76.00**
-FP	Frost Proof Bucket	**471.00**
-G	Galvanized CI	**935.00**
-H	Hinged Grate	**327.00**
-M	Ductile Iron Grate	**335.00**
-S	Square Top (Add for CI only. For NB or PB, see below)	**441.00**
-SC	Solid Scoriated Cover	**748.00**
-SNB	Square Top, add to CI	**1,592.00**
-SPB	Square Top, add to CI	**1,380.00**
-U	Vandal Proof Grate	**188.00**

NOTE: Trap Primer not available, specify 2131.

FIG. 2131 MEDIUM DUTY FLOOR DRAIN WITH 12" ROUND TOP

2131 Same as 2130 but with deep body

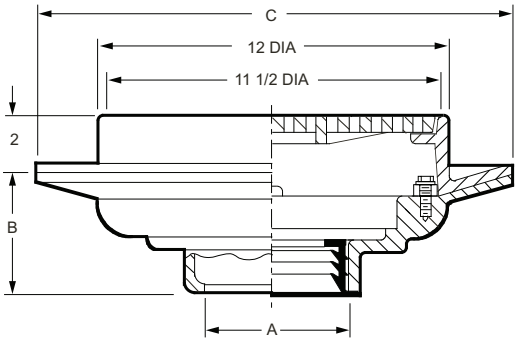

A OUTLET SIZE	TOP SIZE	FREE AREA SQ IN	C DIA.	†DUCO CI	DUCO CI PB TOP	DUCO CI NB TOP	APPROX. WEIGHT LBS
02, 03, 04"	12"	28.5	15 1/4"	**1,636.00**	**2,470.00**	**2,602.00**	55
05, 06"	12"	28.5	15 1/4"	**1,636.00**	**2,470.00**	**2,602.00**	55

REGULARLY FURNISHED: Duco Cast Iron Body and Flashing Collar with Cast Iron Bar Grate.

OUTLET VARIATIONS (Specify type of outlet and pipe size in inches.)

Outlet Type	Outlet Designation Outlet Type/Pipe Size	"B" Body HT. DIM.	ADD
Inside Caulk	C02, C03, C04, C05, C06	5"	**N/C**
Speedi-Set SW	L02, L03, L04	5"	**N/C**
Speedi-Set XH	LXH02, LXH03, LXH04	5"	**N/C**
Threaded	T02, T03, T04	3 3/4"	**99.00**
No-Hub	Y02, Y03, Y04, Y05, Y06	5"	**N/C**

OPTIONS:		ADD
-B	Sediment Bucket	**327.00**
-D	Dome Grate, CI	**177.00**
-DG	Deflector Grate, CI	**511.00**
-DID	Drain Installation Device	**458.00**
-DNB	Dome Grate, add to CI	**1,592.00**
-DPB	Dome Grate, add to CI	**1,367.00**
-FBSCI	Flat Bottom Strainer, CI	**76.00**
-FP	Frost Proof Bucket	**471.00**
-G	Galvanized CI	**935.00**
-H	Hinged Grate	**327.00**
-M	Ductile Iron Grate	**335.00**
-P	Trap Primer Conn	**210.00**
-S	Square Top (Add for CI only. For NB or PB, see below)	**441.00**
-SC	Solid Scoriated Cover	**748.00**
-SNB	Square Top, add to CI	**1,592.00**
-SPB	Square Top, add to CI	**1,380.00**
-U	Vandal Proof Grate	**188.00**

†REGULARLY FURNISHED

FIG. 2135 MEDIUM DUTY FLOOR DRAIN WITH 12" ROUND TOP

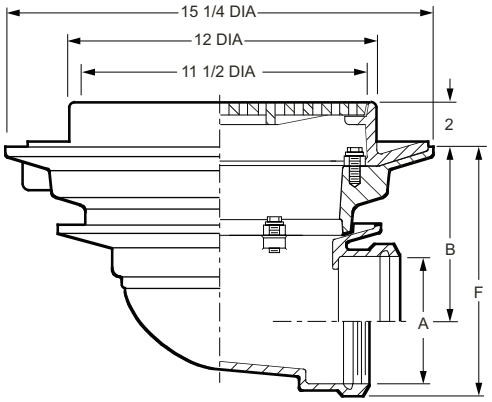

A OUTLET SIZE	TOP SIZE	FREE AREA SQ IN	B	†DUCO CI	DUCO CI PB TOP	DUCO CI NB TOP	APPROX. WEIGHT LBS
02"	12"	28.5	6 7/8	**2,189.00**	**3,023.00**	**3,155.00**	51
03"	12"	28.5	6 3/8	**2,189.00**	**3,023.00**	**3,155.00**	51
04"	12"	28.5	5 7/8	**2,189.00**	**3,023.00**	**3,155.00**	51
05"	12"	28.5	5	**2,189.00**	**3,023.00**	**3,155.00**	51
06"	12"	28.5	4 1/2	**2,189.00**	**3,023.00**	**3,155.00**	51

REGULARLY FURNISHED: Duco Cast Iron Body and Flashing Collar with Cast Iron Bar Grate.

OUTLET VARIATIONS (Specify type of outlet and pipe size in inches.)

Outlet Type	Outlet Designation Outlet Type/Pipe Size	"F" Body HT. DIM.	ADD
Inside Caulk	C02	8 5/8"	**N/C**
	C03, C04	8 3/4"	**N/C**
	C05, C06	8 1/2"	**N/C**
Threaded	T02	8 5/8"	**N/C**
	T03, T04	8 3/4"	**N/C**
	T05, T06	8 1/2"	**N/C**
No-Hub	Y02	8 5/8"	**N/C**
	Y03, Y04	8 3/4"	**N/C**
	Y05, Y06	**See Fig. 2646Y for list add**	

OPTIONS:		ADD
-ARI	ARC Inside	**826.00**
-ARIO	ARC In and Out	**1,094.00**
-B	Sediment Bucket	**327.00**
-D	Dome Grate, CI	**177.00**
-DG	Deflector Grate	**511.00**
-DNB	Dome Grate, add to CI	**1,592.00**
-DPB	Dome Grate, add to CI	**1,367.00**
-G	Galvanized CI	**935.00**
-H	Hinged Grate	**327.00**
-M	Ductile Iron Grate	**335.00**
-P	Trap Primer Connection	**210.00**
-S	Square Top (Add for CI only. For NB or PB, see below)	**441.00**
-SC	Solid Scoriated Cover	**748.00**
-SNB	Square Top, add to CI	**1,592.00**
-SPB	Square Top, add to CI	**1,380.00**
-U	Vandal Proof Grate	**188.00**

FIG. 2140 MEDIUM DUTY FLOOR DRAIN WITH 12" ROUND TOP W/TRACTOR GRATE

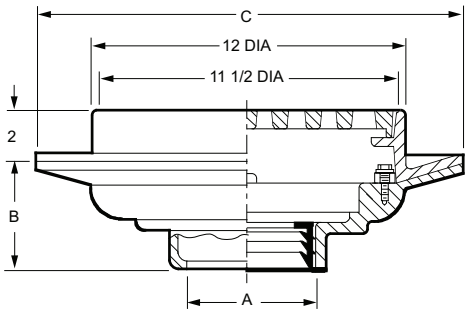

A OUTLET SIZE	TOP SIZE	FREE AREA SQ IN	C DIA.	†DUCO CI	DUCO CI PB TOP	DUCO CI NB TOP	APPROX. WEIGHT LBS
02, 03, 04"	12"	29	**15 1/4"	**1,759.00**	**2,593.00**	**2,725.00**	45
05, 06"	12"	29	15 1/4"	**1,759.00**	**2,593.00**	**2,725.00**	47

*Priced for Caulk Outlet. See Outlet Types for variations.
**Dimension is 16 for Caulk Outlet

REGULARLY FURNISHED: Duco Cast Iron Body and Flashing Collar with Medium Duty Cast Iron Tractor Grate.

For Heavy Duty: Specify Ductile Iron Grate -M

OUTLET VARIATIONS (Specify type of outlet and pipe size in inches.)

Outlet Type	Outlet Designation Outlet Type/Pipe Size	"B" Body HT. DIM.	ADD
Inside Caulk	C02, C03, C04, C05, C06	3 3/4"	**N/C**
Speedi-Set SW	Not Available	**Specify Fig. 2141**	
Speedi-Set XH	Not Available	**Specify Fig. 2141**	
Threaded	T02, T03, T04, T05, T06	3 3/4"	**99.00**
No-Hub	Not Available	**Specify Fig. 2141**	

OPTIONS:		ADD
-ARI	ARC Inside	**826.00**
-ARIO	ARC In and Out	**1,094.00**
-B	Sediment Bucket	**327.00**
-DG	Deflector Grate	**511.00**
-DID*	Drain Installation Device (For Caulk Outlet Only)	**265.00**
-DID*	Drain Installation Device (For No-Hub & Thrd Outlets)	**458.00**
-FBSCI	Flat Bottom Strainer, CI	**76.00**
-G	Galvanized CI	**935.00**
-M	Ductile Iron Grate	**335.00**
-S	Square Top (Add for CI only. For NB or PB, see below)	**441.00**
-SC	Solid Scoriated Cover	**748.00**
-SNB	Square Top, add to CI	**1,592.00**
-SPB	Square Top, add to CI	**1,380.00**
-U	Vandal Proof Grate	**188.00**

*Requires body modifications. Must be shipped complete from the factory.

Note: Trap Primer (-P) cannot be used when Caulk Outlet is specified. Please specify Fig. 2141.

†REGULARLY FURNISHED

FIG. 2141 MEDIUM DUTY FLOOR DRAIN WITH 12" ROUND TOP W/TRACTOR GRATE

2141 Same as 2140 with deep body

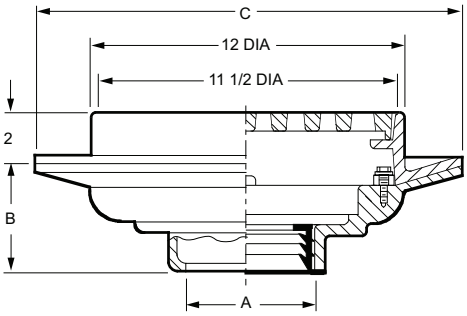

A OUTLET SIZE	TOP SIZE	FREE AREA SQ IN	C DIA.	†DUCO CI	DUCO CI PB TOP	DUCO CI NB TOP	APPROX. WEIGHT LBS
02, 03, 04"	12"	28.5	15 1/4"	**1,759.00**	**2,593.00**	**2,725.00**	90
05, 06"	12"	28.5	15 1/4"	**1,759.00**	**2,593.00**	**2,725.00**	93

REGULARLY FURNISHED: Duco Cast Iron Body and Flashing Collar with Medium Duty Cast Iron Tractor Grate.

For Heavy Duty: Specify Ductile Iron Grate -M

OUTLET VARIATIONS (Specify type of outlet and pipe size in inches.)

Outlet Type	Outlet Designation Outlet Type/Pipe Size	"B" Body HT. DIM.	ADD
Inside Caulk	C02, C03, C04, C05, C06	5"	**N/C**
Speedi-Set SW	L02, L03, L04	5"	**N/C**
Speedi-Set XH	LXH02, LXH03, LXH04	5"	**N/C**
Threaded	T02, T03, T04	3 3/4"	**99.00**
No-Hub	Y02, Y03, Y04, Y05, Y06	5"	**N/C**

OPTIONS:		ADD
-ARI	ARC Inside	**826.00**
-ARIO	ARC In and Out	**1,094.00**
-B	Sediment Bucket	**327.00**
-DG	Deflector Grate	**511.00**
-DID	Drain Installation Device	**458.00**
-FBSCI	Flat Bottom Strainer, CI	**76.00**
-FP	Bucket w/Seepage Holes	**471.00**
-G	Galvanized CI	**935.00**
-M	Ductile Iron Grate	**335.00**
-P	Trap Primer Conn	**210.00**
-S	Square Top (Add for CI only. For NB or PB, see below)	**441.00**
-SC	Solid Scoriated Cover	**748.00**
-SNB	Square Top, add to CI	**1,592.00**
-SPB	Square Top, add to CI	**1,380.00**
-U	Vandal Proof Grate	**188.00**

FIG. 2142 MEDIUM DUTY FLOOR DRAIN WITH 12" TOP W/ROUND TRACTOR GRATE AND SOLID FREE STANDING SEDIMENT BUCKET

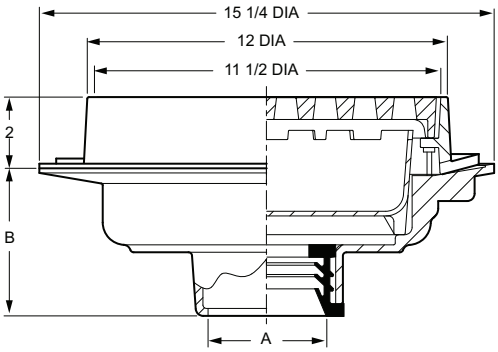

A OUTLET SIZE	TOP SIZE	FREE AREA SQ IN	†DUCO CI	DUCO CI PB TOP	DUCO CI NB TOP	APPROX. WEIGHT LBS
02, 03, 04"	12"	29	**2,205.00**	**3,039.00**	**3,171.00**	60
05, 06"	12"	29	**2,205.00**	**3,039.00**	**3,171.00**	62

REGULARLY FURNISHED: Duco Cast Iron Body and Flashing Collar with Medium Duty Cast Iron Tractor Grate and Solid Free Standing Sediment Bucket.

For Heavy Duty: Specify Ductile Iron Grate -M

OUTLET VARIATIONS (Specify type of outlet and pipe size in inches.)

Outlet Type	Outlet Designation Outlet Type/Pipe Size	"B" Body HT. DIM.	ADD
Inside Caulk	C02, C03, C04, C05, C06	5"	**N/C**
Speedi-Set SW	L02, L03, L04	5"	**N/C**
Speedi-Set XH	LXH02, LXH03, LXH04	5"	**N/C**
Threaded	T02, T03, T04	3 3/4"	**99.00**
No-Hub	Y02, Y03, Y04, Y05, Y06	5"	**N/C**

OPTIONS:		ADD
-ARI	ARC Inside	**1,092.00**
-ARIO	ARC In and Out	**1,437.00**
-DG	Deflector Grate	**511.00**
-DID	Drain Installation Device	**458.00**
-FBSCI	Flat Bottom Strainer, CI	**76.00**
-FP	Seepage Holes in Bucket	**149.00**
-G	Galvanized CI	**1,243.00**
-M	Ductile Iron Grate	**335.00**
-P	Trap Primer Conn	**210.00**
-S	Square Top (Add for CI only. For NB or PB, see below)	**441.00**
-SC	Solid Scoriated Cover	**748.00**
-SNB	Square Top, add to CI	**1,592.00**
-SPB	Square Top, add to CI	**1,380.00**
-U	Vandal Proof Grate	**188.00**

†REGULARLY FURNISHED

FIG. 2143 HEAVY DUTY FLOOR DRAIN WITH 15" ROUND TOP W/TRACTOR GRATE

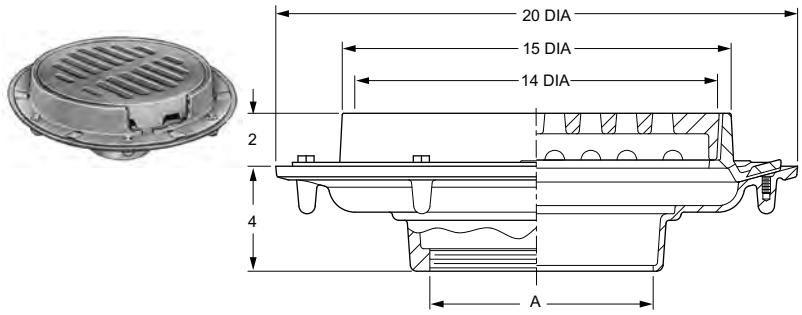

OUTLET VARIATIONS (Specify type of outlet and pipe size in inches.)

Outlet Type	Outlet Designation Outlet Type/Pipe Size	Body HT. DIM.	ADD
Inside Caulk	C03, C04, C05, C06, C08	4"	N/C
Threaded	T03, T04, T05, T06, T08	4"	99.00
No-Hub	See Fig. 2646Y for list add to THREADED body price		

OPTIONS:		ADD
-D	Dome Grate, CI	516.00
-FBS	Alum Flat Bottom Strainer	126.00
-FBSCI	Flat Bottom Strainer, CI	123.00
-G	Galv CI Body	1,352.00
-HC4	4" High Collar	582.00
-M	Ductile Iron Grate	847.00
-S	Square Top (Add for CI only. For NB or PB, see below)	607.00
-SNB	Square Top, add to CI	2,530.00
-SPB	Square Top, add to CI	2,189.00
-U	Vandal Proof Grate	188.00

A OUTLET SIZE	TOP SIZE	FREE AREA SQ IN	†DUCO CI	DUCO CI PB TOP	DUCO CI NB TOP	APPROX. WEIGHT LBS
03, 04, 05"	15"	45	3,502.00	4,893.00	5,190.00	71
06, 08"	15"	45	3,502.00	4,893.00	5,190.00	73

REGULARLY FURNISHED: Duco Cast Iron Body and Flashing Collar with Cast Iron Tractor Grate.

FIG. 2145 MEDIUM DUTY FLOOR DRAIN WITH 12" ROUND TOP W/TRACTOR GRATE

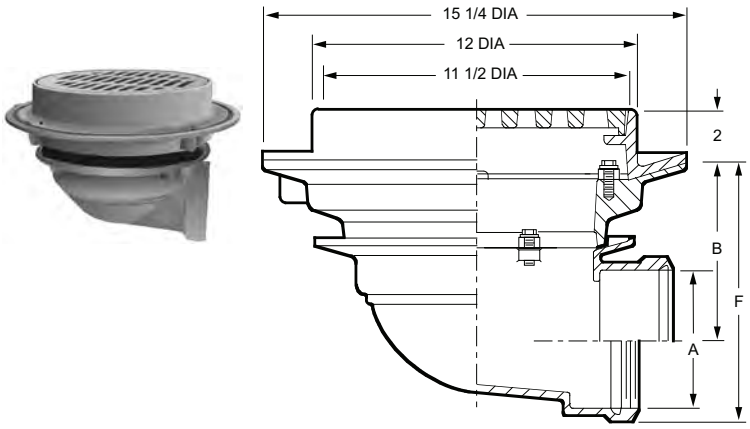

OUTLET VARIATIONS (Specify type of outlet and pipe size in inches.)

Outlet Type	Outlet Designation Outlet Type/Pipe Size	"F" Body HT. DIM.	ADD
Inside Caulk	C02	8 5/8"	N/C
	C03, C04	8 3/4"	N/C
	C05, C06	8 1/2"	N/C
Threaded	T02	8 5/8"	N/C
	T03, T04	8 3/4"	N/C
	T05, T06	8 1/2"	N/C
No-Hub	Y02	8 5/8"	N/C
	Y03, Y04	8 3/4"	N/C
	Y05, Y06	See Fig. 2646Y for list add	

OPTIONS:		ADD
-ARI	ARC Inside	826.00
-ARIO	ARC In and Out	1,094.00
-B	Sediment Bucket	327.00
-DG	Deflector Grate	511.00
-G	Galvanized CI	935.00
-M	Ductile Iron Grate	335.00
-P	Trap Primer Conn	210.00
-S	Square Top (Add for CI only. For NB or PB, see below)	441.00
-SC	Solid Scoriated Cover	748.00
-SNB	Square Top, add to CI	1,592.00
-SPB	Square Top, add to CI	1,380.00
-U	Vandal Proof Grate	188.00

A OUTLET SIZE	TOP SIZE	FREE AREA SQ IN	B	†DUCO CI	DUCO CI PB TOP	DUCO CI NB TOP	APPROX. WEIGHT LBS
02"	12"	29	6 7/8	2,313.00	3,147.00	3,279.00	51
03"	12"	29	6 3/8	2,313.00	3,147.00	3,279.00	51
04"	12"	29	5 7/8	2,313.00	3,147.00	3,279.00	51
05"	12"	29	5	2,313.00	3,147.00	3,279.00	53
06"	12"	29	4 1/2	2,313.00	3,147.00	3,279.00	53

REGULARLY FURNISHED: Duco Cast Iron Body and Flashing Collar with Medium Duty Cast Iron Tractor Grate.

For Heavy Duty: Specify Ductile Iron Grate -M

†REGULARLY FURNISHED

FIG. 2147 MEDIUM DUTY FLOOR DRAIN WITH 12" ROUND TOP W/TRACTOR GRATE AND SOLID FREE STANDING SEDIMENT BUCKET

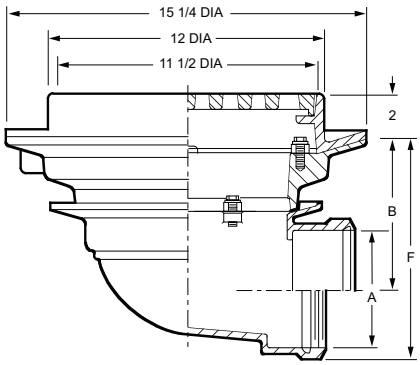

A OUTLET SIZE	TOP SIZE	FREE AREA SQ IN	B	†DUCO CI	DUCO CI PB TOP	DUCO CI NB TOP	APPROX. WEIGHT LBS
02"	12"	29	6 7/8	**2,764.00**	**3,598.00**	**3,730.00**	70
03"	12"	29	6 3/8	**2,764.00**	**3,598.00**	**3,730.00**	70
04"	12"	29	5 7/8	**2,764.00**	**3,598.00**	**3,730.00**	70
05"	12"	29	5	**2,764.00**	**3,598.00**	**3,730.00**	72
06"	12"	29	4 1/2	**2,764.00**	**3,598.00**	**3,730.00**	72

REGULARLY FURNISHED: Duco Cast Iron Body and Flashing Collar with Medium Duty Cast Iron Tractor Grate and Solid Free Standing Sediment Bucket.

For Heavy Duty: Specify Ductile Iron Grate -M

OUTLET VARIATIONS (Specify type of outlet and pipe size in inches.)

Outlet Type	Outlet Designation Outlet Type/Pipe Size	"F" Body HT. DIM.	ADD
Inside Caulk	C02	8 5/8"	**N/C**
	C03, C04	8 3/4"	**N/C**
	C05, C06	8 1/2"	**N/C**
Threaded	T02	8 5/8"	**N/C**
	T03, T04	8 3/4"	**N/C**
	T05, T06	8 1/2"	**N/C**
No-Hub	Y02	8 5/8"	**N/C**
	Y03, Y04	8 3/4"	**N/C**
	Y05, Y06	**See Fig. 2646Y for list add**	

OPTIONS:		ADD
-ARI	ARC Inside	**1,092.00**
-ARIO	ARC In and Out	**1,437.00**
-DG	Deflector Grate	**511.00**
-FP	Seepage Holes in Bucket	**149.00**
-G	Galvanized CI	**1,243.00**
-M	Ductile Iron Grate	**335.00**
-P	Trap Primer Conn	**210.00**
-S	Square Top (Add for CI only. For NB or PB, see below)	**441.00**
-SC	Solid Scoriated Cover	**748.00**
-SNB	Square Top, add to CI	**1,592.00**
-SPB	Square Top, add to CI	**1,380.00**
-U	Vandal Proof Grate	**188.00**

FIG. 2210 LIGHT DUTY FLOOR DRAIN WITH 8 1/2" ROUND TOP AND "SAFE SET" SEDIMENT BUCKET

FUNCTION: For general light duty use where waste water contains solids or debris that must be prevented from entering drainage lines. "Safe-Set" design insures bucket replacement after cleaning, since top grate cannot be inserted unless bucket is in place.

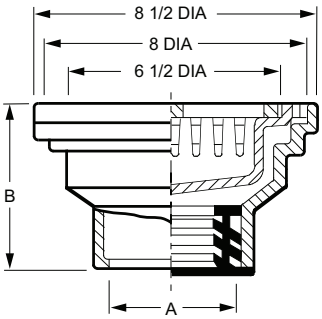

A OUTLET SIZE	TOP SIZE	FREE AREA SQ IN	†DUCO CI	DUCO CI PB TOP	DUCO CI NB TOP	APPROX. WEIGHT LBS
02, 03, 04"	8 1/2"	9.25	**524.00**	**1,087.00**	**1,217.00**	14

REGULARLY FURNISHED: Duco Cast Iron Body with Cast Iron Grate and Sediment Bucket.

OUTLET VARIATIONS (Specify type of outlet and pipe size in inches.)

Outlet Type	Outlet Designation Outlet Type/Pipe Size	"B" Body HT. DIM.	ADD
Inside Caulk	C02, C03, C04	5"	**N/C**
Speedi-Set SW	L02, L03, L04	5"	**N/C**
Speedi-Set XH	LXH02, LXH03, LXH04	5"	**N/C**
Threaded	T02, T03, T04	3 1/2"	**99.00**
No-Hub	Y02, Y03, Y04	5"	**N/C**

OPTIONS:		ADD
-ARI	ARC Inside	**481.00**
-ARIO	ARC In and Out	**640.00**
-D	Dome Grate, CI	**104.00**
-DNB	Dome Grate, add to CI	**1,171.00**
-DPB	Dome Grate, add to CI	**931.00**
-FBSCI	Flat Bottom Strainer, CI	**76.00**
-G	Galvanized CI	**545.00**
-H	Hinged Grate	**327.00**
-MBG	Ductile Iron Bucket & Grate	**640.00**
-P	Trap Primer Conn	**210.00**
-S	Square Top (Add for CI only. For NB or PB, see below)	**414.00**
-SNB	Square Top, add to CI	**1,205.00**
-SPB	Square Top, add to CI	**998.00**
-U	Vandal Proof Grate	**188.00**
-XP	Closure Plug, 02, 03"	**507.00**
	04"	**847.00**

†REGULARLY FURNISHED

FIG. 2215 LIGHT DUTY FLOOR DRAIN WITH 8 1/2" ROUND TOP AND "SAFE SET" SEDIMENT BUCKET

FUNCTION: For general light duty use where waste water contains solids or debris that must be prevented from entering drainage lines. "Safe-Set" design insures bucket replacement after cleaning, since top grate cannot be inserted unless bucket is in place.

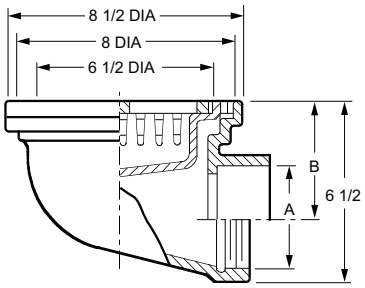

OUTLET VARIATIONS (Specify type of outlet and pipe size in inches.)

Outlet Type	Outlet Designation Outlet Type/Pipe Size	Body HT. DIM.	ADD
Inside Caulk	C02, C03, C04	6 1/2"	**N/C**
Threaded	T02, T03, T04	6 1/2"	**N/C**
No-Hub	Y02, Y03, Y04	**See Fig. 2646Y for list add**	

OPTIONS:		ADD
-D	Dome Grate, CI	**104.00**
-DNB	Dome Grate, add to CI	**1,171.00**
-DPB	Dome Grate, add to CI	**931.00**
-G	Galvanized CI	**545.00**
-H	Hinged Grate	**327.00**
-MBG	Ductile Iron Bucket & Grate	**640.00**
-P	Trap Primer Conn	**210.00**
-S	Square Top (Add for CI only. For NB or PB, see below)	**414.00**
-SNB	Square Top, add to CI	**1,205.00**
-SPB	Square Top, add to CI	**998.00**
-U	Vandal Proof Grate	**188.00**

A OUTLET SIZE	TOP SIZE	FREE AREA SQ IN	B	†DUCO CI	DUCO CI PB TOP	DUCO CI NB TOP	APPROX. WEIGHT LBS
02"	8 1/2"	9.25	4 3/4"	**1,083.00**	**1,646.00**	**1,776.00**	16
03"	8 1/2"	9.25	4 1/4"	**1,083.00**	**1,646.00**	**1,776.00**	16
04"	8 1/2"	9.25	3 1/4"	**1,083.00**	**1,646.00**	**1,776.00**	16

REGULARLY FURNISHED: Duco Cast Iron Body with Cast Iron Grate and Sediment Bucket.

FIG. 2220 LIGHT DUTY FLOOR DRAIN WITH 8 1/2" ROUND TOP AND "SAFE SET" SEDIMENT BUCKET WITH FLANGE

FUNCTION: For general light duty use where waste water contains solids or debris that must be prevented from entering drainage lines. "Safe-Set" design insures bucket replacement after cleaning since top grate cannot be inserted unless bucket is in place.

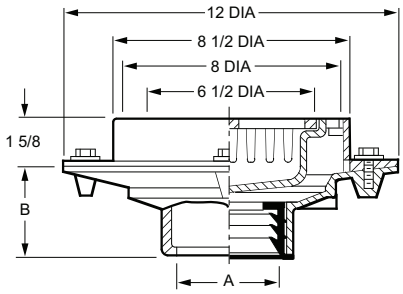

OUTLET VARIATIONS (Specify type of outlet and pipe size in inches.)

Outlet Type	Outlet Designation Outlet Type/Pipe Size	"B" Body HT. DIM.	ADD
Inside Caulk	C02, C03, C04	3 3/4"	**N/C**
Speedi-Set SW	L02, L03, L04	3 3/4"	**N/C**
Speedi-Set XH	LXH02, LXH03, LXH04	3 3/4"	**N/C**
Threaded	T02, T03, T04	2"	**99.00**
No-Hub	Y02, Y03, Y04	3 3/4"	**N/C**
No-Hub	Y06	3 3/4"	**174.00**

OPTIONS:		ADD
-D	Dome Grate, CI	**104.00**
-DID*	Drain Installation Device	**265.00**
-DNB	Dome Grate, add to CI	**1,171.00**
-DPB	Dome Grate, add to CI	**931.00**
-G	Galvanized CI	**603.00**
-H**	Hinged Grate (Not available in Ductile Iron)	**327.00**
-MBG	Ductile Iron Bucket & Grate	**640.00**
-P	Trap Primer Conn	**210.00**
-S	Square Top (Add for CI only. For NB or PB, see below)	**414.00**
-SNB	Square Top, add to CI	**1,205.00**
-SPB	Square Top, add to CI	**998.00**
-U	Vandal Proof Grate	**188.00**
-XP	Closure Plug, 02, 03"	**507.00**
	04"	**847.00**

A OUTLET SIZE	TOP SIZE	FREE AREA SQ IN	†DUCO CI	DUCO CI PB TOP	DUCO CI NB TOP	APPROX. WEIGHT LBS
02, 03, 04"	8 1/2"	9.25	**767.00**	**1,330.00**	**1,460.00**	22

REGULARLY FURNISHED: Duco Cast Iron Body and Flashing Collar with Cast Iron Grate and Sediment Bucket.

*Requires body modifications. Must be shipped complete w/drain from the factory.
**When hinged ductile iron grate is specified, see 2210.

†REGULARLY FURNISHED

FIG. 2225 LIGHT DUTY FLOOR DRAIN WITH 8 1/2" ROUND TOP AND "SAFE SET" SEDIMENT BUCKET WITH FLANGE

FUNCTION: For general light duty use where waste water contains solids or debris that must be prevented from entering drainage lines. "Safe-Set" design insures bucket replacement after cleaning since top grate cannot be inserted unless bucket is in place.

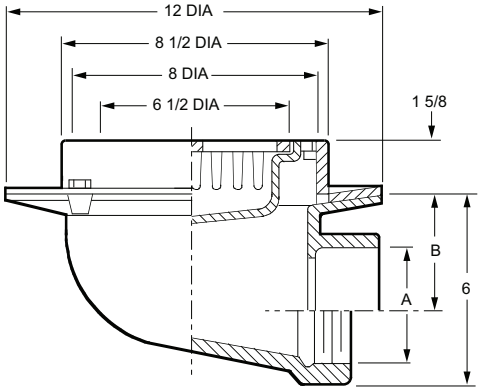

A OUTLET SIZE	TOP SIZE	FREE AREA SQ IN	B	†DUCO CI	DUCO CI PB TOP	DUCO CI NB TOP	APPROX. WEIGHT LBS
02"	8 1/2"	9.25	4 1/4"	**1,326.00**	**1,889.00**	**2,019.00**	30
03"	8 1/2"	9.25	3 3/4"	**1,326.00**	**1,889.00**	**2,019.00**	30
04"	8 1/2"	9.25	3 1/4"	**1,326.00**	**1,889.00**	**2,019.00**	30

REGULARLY FURNISHED: Duco Cast Iron Body and Flashing Collar with Cast Iron Grate and Sediment Bucket.

OUTLET VARIATIONS (Specify type of outlet and pipe size in inches.)

Outlet Type	Outlet Designation Outlet Type/Pipe Size	Body HT. DIM.	ADD
Inside Caulk	C02, C03, C04	6"	**N/C**
Threaded	T02, T03, T04	6"	**N/C**
No-Hub	Y02, Y03, Y04	**See Fig. 2646Y for list add to THREADED body**	

OPTIONS:		ADD
-D	Dome Grate, CI	**104.00**
-DNB	Dome Grate, add to CI	**1,171.00**
-DPB	Dome Grate, add to CI	**931.00**
-G	Galvanized CI	**603.00**
-MBG	Ductile Iron Bucket & Grate	**640.00**
-H	Hinged Grate	**327.00**
-P	Trap Primer Conn	**210.00**
-S	Square Top (Add for CI only. For NB or PB, see below)	**414.00**
-SNB	Square Top, add to CI	**1,205.00**
-SPB	Square Top, add to CI	**998.00**
-U	Vandal Proof Grate	**188.00**

FIG. 2230 LIGHT DUTY FLOOR DRAIN WITH 12" ROUND TOP AND "SAFE SET" SEDIMENT BUCKET

FUNCTION: For general use where water contains solids or debris that must be intercepted. Large top is used where high flows are anticipated. "Safe-Set" design insures bucket replacement after cleaning since top grate cannot be inserted unless bucket is in place.

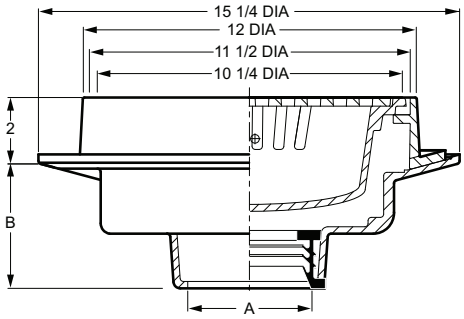

A OUTLET SIZE	TOP SIZE	FREE AREA SQ IN	†DUCO CI	DUCO CI PB TOP	DUCO CI NB TOP	APPROX. WEIGHT LBS
02, 03, 04"	12"	25.5	**1,933.00**	**2,767.00**	**2,899.00**	70
05, 06"	12"	25.5	**1,933.00**	**2,767.00**	**2,899.00**	72
08"	12"	25.5	**2,328.00**	**3,162.00**	**3,294.00**	74

REGULARLY FURNISHED: Duco Cast Iron Body and Flashing Collar with Cast Iron ADA Grate and Slotted Sediment Bucket.

OUTLET VARIATIONS (Specify type of outlet and pipe size in inches.)

Outlet Type	Outlet Designation Outlet Type/Pipe Size	"B" Body HT. DIM.	ADD
Inside Caulk	C02, C03, C04	5"	**N/C**
	C05, C06, C08	5"	**N/C**
Speedi-Set SW	L02, L03, L04	5"	**N/C**
Speedi-Set XH	LXH02, LXH03, LXH04	5"	**N/C**
Threaded	T02, T03, T04	3 3/4"	**99.00**
	T05, T06, T08	3 3/4"	**99.00**
No-Hub	Y02, Y03, Y04	5"	**N/C**
	Y05, Y06, Y08	5"	**N/C**

OPTIONS:		ADD
-ARI	ARC Inside	**1,092.00**
-ARIO	ARC In and Out	**1,437.00**
-DID	Drain Installation Device	**458.00**
-FBSCI	Flat Bottom Strainer, CI	**76.00**
-G	Galvanized CI	**1,243.00**
-H	Hinged Grate	**327.00**
-MBG	Ductile Iron Bucket & Grate	**956.00**
-P	Trap Primer Conn	**210.00**
-S	Square Top (Add for CI only. For NB or PB, see below)	**441.00**
-SNB	Square Top, add to CI	**1,592.00**
-SPB	Square Top, add to CI	**1,380.00**
-U	Vandal Proof Grate	**188.00**

†REGULARLY FURNISHED

FIG. 2231 MEDIUM DUTY FLOOR DRAIN WITH 12" ROUND TOP AND SEDIMENT BUCKET

FUNCTION: Used in moderate traffic areas where waste water contains sediment or debris and floor construction requires a shallow drain. Body flange and flashing collar serve as anchor in on-grade locations and as flashing clamp when installed in waterproof floors.

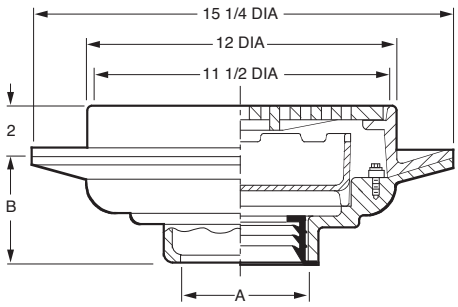

A OUTLET SIZE	TOP SIZE	FREE AREA SQ IN	†DUCO CI	DUCO CI PB TOP	DUCO CI NB TOP	APPROX. WEIGHT LBS
02, 03, 04"	12"	28.5	**1,933.00**	**2,767.00**	**2,899.00**	70
05, 06"	12"	28.5	**1,933.00**	**2,767.00**	**2,899.00**	72
08"	12"	28.5	**2,328.00**	**3,162.00**	**3,294.00**	74

REGULARLY FURNISHED: Duco Cast Iron Body and Flashing Collar with Cast Iron Bar Grate and Solid Free Standing Bucket.

OUTLET VARIATIONS (Specify type of outlet and pipe size in inches.)

Outlet Type	Outlet Designation Outlet Type/Pipe Size	"B" Body HT. DIM.	ADD
Inside Caulk	C02, C03, C04	3 3/4"	**N/C**
	C05, C06, C08	3 3/4"	**N/C**
Speedi-Set SW	L02, L03, L04	3 3/4"	**N/C**
Speedi-Set XH	LXH02, LXH03, LXH04	3 3/4"	**N/C**
Threaded	T02, T03, T04	3 3/4"	**99.00**
	T05, T06, T08	3 3/4"	**99.00**
No-Hub	Y02, Y03, Y04	3 3/4"	**N/C**
	Y05, Y06, Y08	3 3/4"	**N/C**

OPTIONS:		ADD
-ARI	ARC Inside	**1,092.00**
-ARIO	ARC In and Out	**1,437.00**
-DID	Drain Installation Device	**458.00**
-FBSCI	Flat Bottom Strainer, CI	**76.00**
-G	Galvanized CI	**1,243.00**
-H	Hinged Grate	**327.00**
-M	Ductile Iron Grate	**335.00**
-P	Trap Primer Conn	**210.00**
-S	Square Top (Add for CI only. For NB or PB, see below)	**441.00**
-SNB	Square Top, add to CI	**1,592.00**
-SPB	Square Top, add to CI	**1,380.00**
-U	Vandal Proof Grate	**188.00**

FIG. 2233 MEDIUM DUTY FLOOR DRAIN WITH 12" ROUND TOP W/TRACTOR GRATE AND SEDIMENT BUCKET

FUNCTION: Used in heavy trucking areas where debris is anticipated and must be intercepted. The suspended sediment bucket when set under the grate guarantees efficient interception of debris.

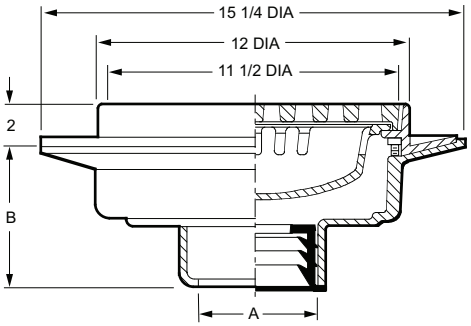

A OUTLET SIZE	TOP SIZE	FREE AREA SQ IN	†DUCO CI	DUCO CI PB TOP	DUCO CI NB TOP	APPROX. WEIGHT LBS
02, 03, 04"	12"	29	**1,933.00**	**2,767.00**	**2,899.00**	58
05, 06"	12"	29	**1,933.00**	**2,767.00**	**2,899.00**	60
08"	12"	29	**2,328.00**	**3,162.00**	**3,294.00**	62

REGULARLY FURNISHED: Duco Cast Iron Body and Flashing Collar with Medium Duty Cast Iron Tractor Grate and Slotted Sediment Bucket.

For Heavy Duty: Specify Ductile Iron Grate -M

OUTLET VARIATIONS (Specify type of outlet and pipe size in inches.)

Outlet Type	Outlet Designation Outlet Type/Pipe Size	"B" Body HT. DIM.	ADD
Inside Caulk	C02, C03, C04	5"	**N/C**
	C05, C06, C08	5"	**N/C**
Speedi-Set SW	L02, L03, L04	5"	**N/C**
Speedi-Set XH	LXH02, LXH03, LXH04	5"	**N/C**
Threaded	T02, T03, T04	3 3/4"	**99.00**
	T05, T06, T08	3 3/4"	**99.00**
No-Hub	Y02, Y03, Y04	5"	**N/C**
	Y05, Y06, Y08	5"	**N/C**

OPTIONS:		ADD
-ARI	ARC Inside	**1,092.00**
-ARIO	ARC In and Out	**1,437.00**
-BS	Bucket with Mesh Screen	**552.00**
-D	Dome Grate, CI	**177.00**
-DID	Drain Installation Device	**458.00**
-DBSCI	Dome Bottom Strainer, CI	**188.00**
-FBSCI	Flat Bottom Strainer, CI	**76.00**
-G	Galvanized CI	**1,243.00**
-M	Ductile Iron Grate	**335.00**
-P	Trap Primer Conn	**210.00**
-S	Square Top (Add for CI only. For NB or PB, see below)	**441.00**
-SC	Solid Scoriated Cover	**748.00**
-SNB	Square Top, add to CI	**1,592.00**
-SPB	Square Top, add to CI	**1,380.00**
-U	Vandal Proof Grate	**188.00**

†REGULARLY FURNISHED

FIG. 2235 LIGHT DUTY FLOOR DRAIN WITH 12" ROUND TOP AND "SAFE SET" SEDIMENT BUCKET

FUNCTION: For general use where water contains solids or debris that must be intercepted. Large top is used where high flows are anticipated. "Safe-Set" design insures bucket replacement after cleaning since top grate cannot be inserted unless bucket is in place.

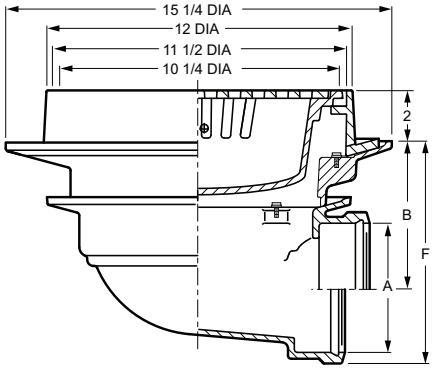

A OUTLET SIZE	TOP SIZE	FREE AREA SQ IN	B	†DUCO CI	DUCO CI PB TOP	DUCO CI NB TOP	APPROX. WEIGHT LBS
02"	12"	25.5	6 7/8"	**2,492.00**	**3,326.00**	**3,458.00**	71
03"	12"	25.5	6 3/8"	**2,492.00**	**3,326.00**	**3,458.00**	71
04"	12"	25.5	5 7/8"	**2,492.00**	**3,326.00**	**3,458.00**	71
05"	12"	25.5	5"	**2,492.00**	**3,326.00**	**3,458.00**	73
06"	12"	25.5	4 1/2"	**2,492.00**	**3,326.00**	**3,458.00**	73

REGULARLY FURNISHED: Duco Cast Iron Body and Flashing Collar with Cast Iron ADA Grate and Slotted Sediment Bucket.

OUTLET VARIATIONS (Specify type of outlet and pipe size in inches.)

Outlet Type	Outlet Designation Outlet Type/Pipe Size	"F" Body HT. DIM.	ADD
Inside Caulk	C02,	8 5/8"	**N/C**
	C03, C04	8 3/4"	**N/C**
	C05, C06	8 1/2"	**N/C**
Threaded	T02	8 5/8"	**N/C**
	T03, T04	8 3/4"	**N/C**
	T05, T06	8 1/2"	**N/C**
No-Hub	Y02,	8 5/8"	**N/C**
	Y03, Y04	8 3/4"	**N/C**
	Y05, Y06	**See Fig. 2646Y for list add to THREADED body**	

OPTIONS:		ADD
-G	Galvanized CI	**1,243.00**
-H	Hinged Grate	**327.00**
-MBG	Ductile Iron Bucket & Grate	**956.00**
-S	Square Top (Add for CI only. For NB or PB, see below)	**441.00**
-SNB	Square Top, add to CI	**1,592.00**
-SPB	Square Top, add to CI	**1,380.00**
-U	Vandal Proof Grate	**188.00**

FIG. 2238 MEDIUM DUTY FLOOR DRAIN WITH 12" ROUND TOP W/TRACTOR GRATE AND SEDIMENT BUCKET

FUNCTION: Used in heavy trucking areas where debris is anticipated and must be intercepted. The suspended sediment bucket when set under the grate guarantees efficient interception of debris.

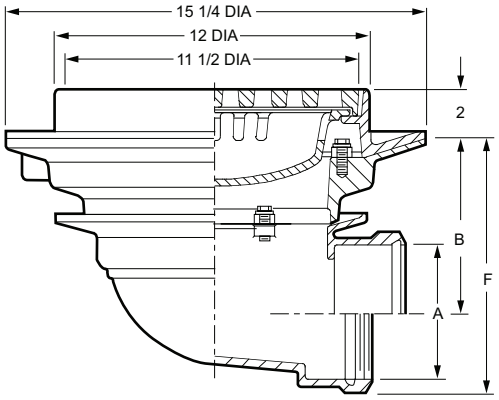

A OUTLET SIZE	TOP SIZE	FREE AREA SQ IN	B	†DUCO CI	DUCO CI PB TOP	DUCO CI NB TOP	APPROX. WEIGHT LBS
02"	12"	29	6 7/8"	**2,492.00**	**3,326.00**	**3,458.00**	74
03"	12"	29	6 3/8"	**2,492.00**	**3,326.00**	**3,458.00**	74
04"	12"	29	5 7/8"	**2,492.00**	**3,326.00**	**3,458.00**	74
05"	12"	29	5"	**2,492.00**	**3,326.00**	**3,458.00**	76
06"	12"	29	4 1/2"	**2,492.00**	**3,326.00**	**3,458.00**	76

REGULARLY FURNISHED: Duco Cast Iron Body and Flashing Collar with Medium Duty Cast Iron Tractor Grate and Slotted Sediment Bucket.

For Heavy Duty: Specify Ductile Iron Grate -M

OUTLET VARIATIONS (Specify type of outlet and pipe size in inches.)

Outlet Type	Outlet Designation Outlet Type/Pipe Size	"F" Body HT. DIM.	ADD
Inside Caulk	C02	8 5/8"	**N/C**
	C03, C04	8 3/4"	**N/C**
	C05, C06	8 1/2"	**N/C**
Threaded	T02	8 5/8"	**N/C**
	T03, T04	8 3/4"	**N/C**
	T05, T06	8 1/2"	**N/C**
No-Hub	Y02	8 5/8"	**N/C**
	Y03, Y04	8 3/4"	**N/C**
	Y05, Y06	**See Fig. 2646Y for list add to THREADED body**	

OPTIONS:		ADD
-BS	Bucket w/Mesh Screen	**552.00**
-D	Dome Grate, CI	**177.00**
-G	Galvanized CI	**1,243.00**
-M	Ductile Iron Grate	**335.00**
-S	Square Top (Add for CI only. For NB or PB, see below)	**441.00**
-SC	Solid Scoriated Cover	**748.00**
-SNB	Square Top, add to CI	**1,592.00**
-SPB	Square Top, add to CI	**1,380.00**
-U	Vandal Proof Grate	**188.00**

†REGULARLY FURNISHED

FIG. 2240 DEEP BODY MEDIUM DUTY FLOOR DRAIN WITH 12" ROUND TOP AND "SAFE SET" SEDIMENT BUCKET
FIG. 2241 DEEP BODY MEDIUM DUTY FLOOR DRAIN WITH 12" ROUND GRATE AND SOLID FREE STANDING SEDIMENT BUCKET

FUNCTION: For general use where water contains solids and debris that must be intercepted. Large deep body and bucket are adaptable to areas where heavy flow and considerable debris are anticipated. "Safe-Set" design (Fig. 2240) insures bucket replacement after cleaning since top grate cannot be inserted unless bucket is in place.

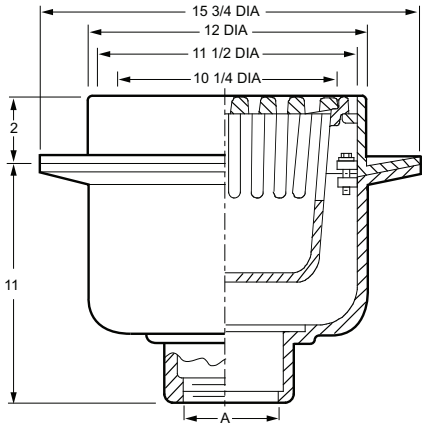

A OUTLET SIZE	TOP SIZE	FREE AREA SQ IN	†DUCO CI	DUCO CI PB TOP	DUCO CI NB TOP	APPROX. WEIGHT LBS
02, 03, 04"	12"	25.5	**2,292.00**	**3,126.00**	**3,258.00**	81
05, 06"	12"	25.5	**2,292.00**	**3,126.00**	**3,258.00**	83

REGULARLY FURNISHED: Duco Cast Iron Body and Flashing Collar with Cast Iron Grate and Slotted Sediment Bucket.

OUTLET VARIATIONS (Specify type of outlet and pipe size in inches.)

Outlet Type	Outlet Designation Outlet Type/Pipe Size	ADD
Inside Caulk	C02, C03, C04, C05, C06	**N/C**
Threaded	T02, T03, T04, T05, T06	**99.00**
No-Hub	Y02, Y03, Y04	**N/C**
	Y05, Y06	**See Fig. 2646Y for list add to THREADED body price**

OPTIONS:		ADD
-B	Solid Free Standing Bucket (2241)	**N/C**
-BS	Mesh Lined Bucket	**536.00**
-D	Dome Grate, CI	**177.00**
-DNB	Dome Grate add to CI	**1,592.00**
-DPB	Dome Grate add to CI	**1,367.00**
-FBSCI	Flat Bottom Strainer, CI	**123.00**
-G	Galvanized CI	**1,560.00**
-H	Hinged Grate*	**327.00**
-M	Ductile Iron Grate (2241)	**339.00**
-P	Trap Primer Conn	**210.00**
-S	Square Top (Add for CI only. For NB or PB, see below)	**441.00**
-SC	Solid Scoriated Cover	**748.00**
-SNB	Square Top, add to CI	**1,592.00**
-SPB	Square Top, add to CI	**1,380.00**
-U	Vandal Proof Grate	**188.00**

*Hinged grate not available in Safe-Set design. Full Grate is provided with a suspended bucket. (Specify Fig. 2241)

FIG. 2242 DEEP BODY HEAVY DUTY FLOOR DRAIN WITH 12" TOP W/TRACTOR GRATE AND SOLID FREE STANDING SEDIMENT BUCKET

FUNCTION: Used in heavy traffic areas where debris is anticipated and must be intercepted. Large deep body and bucket are adaptable to areas where heavy flow and considerable debris are expected.

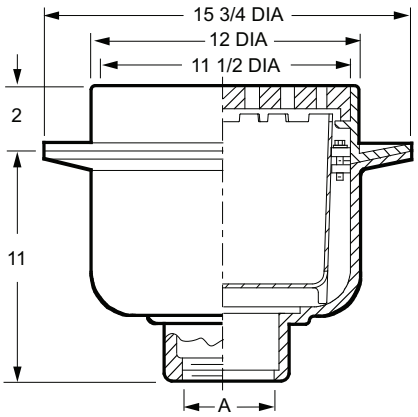

A OUTLET SIZE	TOP SIZE	FREE AREA SQ IN	†DUCO CI	DUCO CI PB TOP	DUCO CI NB TOP	APPROX. WEIGHT LBS
02, 03, 04"	12"	29	**2,292.00**	**3,126.00**	**3,258.00**	76
05, 06"	12"	29	**2,292.00**	**3,126.00**	**3,258.00**	78

REGULARLY FURNISHED: Duco Cast Iron Body and Flashing Collar with Cast Iron Grate and Solid Free Standing Sediment Bucket.

OUTLET VARIATIONS (Specify type of outlet and pipe size in inches.)

Outlet Type	Outlet Designation Outlet Type/Pipe Size	ADD
Inside Caulk	C02, C03, C04, C05, C06	**N/C**
Threaded	T02, T03, T04, T05, T06	**99.00**
No-Hub	Y02, Y03, Y04, Y05, Y06	**N/C**

OPTIONS:		ADD
-DG	Deflector Grate	**440.00**
-FBSCI	Flat Bottom Strainer, CI	**123.00**
-FP	Seepage Holes in Bucket	**174.00**
-G	Galvanized CI	**1,560.00**
-M	Ductile Iron Grate	**339.00**
-P	Trap Primer Conn	**210.00**
-S	Square Top (Add for CI only. For NB or PB, see below)	**441.00**
-SC	Solid Scoriated Cover	**748.00**
-SNB	Square Top, add to CI	**1,592.00**
-SPB	Square Top, add to CI	**1,380.00**
-U	Vandal Proof Grate	**188.00**

†REGULARLY FURNISHED

FIG. 2243 DEEP BODY HEAVY DUTY FLOOR DRAIN WITH 12" TOP W/TRACTOR GRATE AND SUSPENDED SLOTTED SEDIMENT BUCKET

FUNCTION: Used in heavy traffic areas where debris is anticipated and must be intercepted. Large deep body and bucket are adaptable to areas where heavy flow and considerable debris are expected.

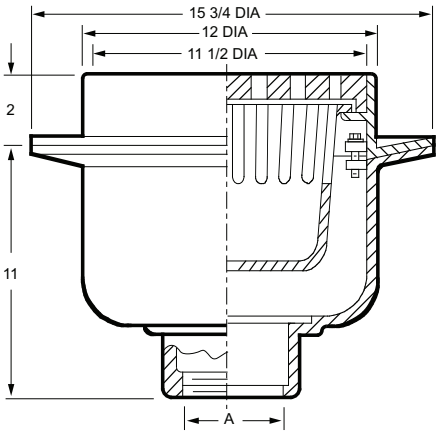

A OUTLET SIZE	TOP SIZE	FREE AREA SQ IN	†DUCO CI	DUCO CI PB TOP	DUCO CI NB TOP	APPROX. WEIGHT LBS
02, 03, 04"	12"	29	**2,292.00**	**3,126.00**	**3,258.00**	84
05, 06"	12"	29	**2,292.00**	**3,126.00**	**3,258.00**	86

REGULARLY FURNISHED: Duco Cast Iron Body and Flashing Collar with Cast Iron Grate and Suspended Slotted Sediment Bucket.

OUTLET VARIATIONS (Specify type of outlet and pipe size in inches.)

Outlet Type	Outlet Designation Outlet Type/Pipe Size	ADD
Inside Caulk	C02, C03, C04, C05, C06	**N/C**
Threaded	T02, T03, T04, T05, T06	**99.00**
No-Hub	Y02, Y03, Y04, Y05, Y06	**N/C**

OPTIONS:		ADD
-DG	Deflector Grate	**440.00**
-FBSCI	Flat Bottom Strainer, CI	**123.00**
-G	Galvanized CI	**1,560.00**
-H	*Hinged Grate	**327.00**
-M	Ductile Iron Grate	**339.00**
-P	Trap Primer Conn	**210.00**
-S	Square Top (Add for CI only. For NB or PB, see below)	**441.00**
-SC	Solid Scoriated Cover	**748.00**
-SNB	Square Top, add to CI	**1,592.00**
-SPB	Square Top, add to CI	**1,380.00**
-U	Vandal Proof Grate	**188.00**

*When hinged grate is specified, drain becomes light duty.

FIG. 2245 DEEP BODY MEDIUM DUTY FLOOR DRAIN WITH 12" ROUND TOP AND "SAFE SET" SEDIMENT BUCKET

FUNCTION: For general use where water contains solids and debris that must be intercepted. Large deep body and bucket are adaptable to areas where heavy flow and considerable debris are anticipated. "Safe-Set" design insures bucket replacement after cleaning since top grate cannot be inserted unless bucket is in place.

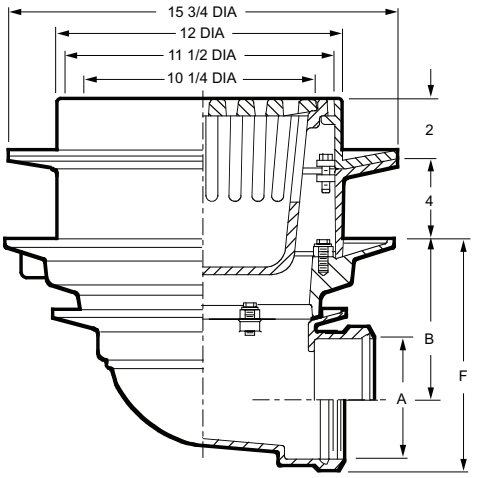

A OUTLET SIZE	TOP SIZE	FREE AREA SQ IN	B	†DUCO CI	DUCO CI PB TOP	DUCO CI NB TOP	APPROX. WEIGHT LBS
02"	12"	25.5	6 7/8"	**3,499.00**	**4,333.00**	**4,465.00**	82
03"	12"	25.5	6 3/8"	**3,499.00**	**4,333.00**	**4,465.00**	82
04"	12"	25.5	5 7/8"	**3,499.00**	**4,333.00**	**4,465.00**	82
05"	12"	25.5	5"	**3,499.00**	**4,333.00**	**4,465.00**	84
06"	12"	25.5	4 1/2"	**3,499.00**	**4,333.00**	**4,465.00**	84

REGULARLY FURNISHED: Duco Cast Iron Body and Flashing Collar with Cast Iron Grate and Slotted Sediment Bucket.

OUTLET VARIATIONS (Specify type of outlet and pipe size in inches.)

Outlet Type	Outlet Designation Outlet Type/Pipe Size	"F" Body HT. DIM.	ADD
Inside Caulk	C02	8 5/8"	**N/C**
	C03, C04	8 3/4"	**N/C**
	C05, C06	8 1/2"	**N/C**
Threaded	T02	8 5/8"	**N/C**
	T03, T04	8 3/4"	**N/C**
	T05, T06	8 1/2"	**N/C**
No-Hub	Y02	8 5/8"	**N/C**
	Y03, Y04	8 3/4"	**N/C**
	Y05, Y06	**See Fig. 2646Y for list add to THREADED body**	

OPTIONS:		ADD
-G	Galvanized CI	**1,688.00**
-H	Hinged Grate*	**327.00**
-S	Square Top (Add for CI only. For NB or PB, see below)	**441.00**
-SC	Solid Scoriated Cover	**748.00**
-SNB	Square Top, add to CI	**1,592.00**
-SPB	Square Top, add to CI	**1,380.00**
-U	Vandal Proof Grate	**188.00**

*Hinged grate not available in Safe-Set design. Full Grate is provided with a suspended bucket.

†REGULARLY FURNISHED

FIG. 2247 DEEP BODY HEAVY DUTY FLOOR DRAIN WITH 12" TOP W/TRACTOR GRATE AND SOLID FREE STANDING SEDIMENT BUCKET

FUNCTION: Used in heavy traffic areas where debris is anticipated and must be intercepted. Large deep body and bucket are adaptable to areas where heavy flow and considerable debris are expected.

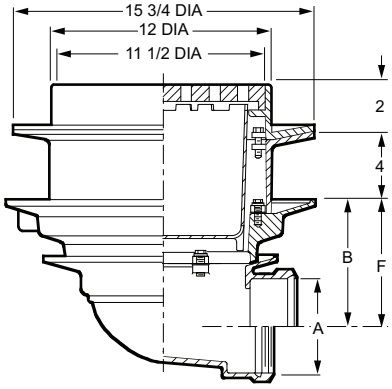

A OUTLET SIZE	TOP SIZE	FREE AREA SQ IN	B	†DUCO CI	DUCO CI PB TOP	DUCO CI NB TOP	APPROX. WEIGHT LBS
02"	12"	29	6 7/8"	**3,499.00**	**4,333.00**	**4,465.00**	70
03"	12"	29	6 3/8"	**3,499.00**	**4,333.00**	**4,465.00**	70
04"	12"	29	5 7/8"	**3,499.00**	**4,333.00**	**4,465.00**	70
05"	12"	29	5"	**3,499.00**	**4,333.00**	**4,465.00**	72
06"	12"	29	4 1/2"	**3,499.00**	**4,333.00**	**4,465.00**	72

REGULARLY FURNISHED: Duco Cast Iron Body and Flashing Collar with Cast Iron Grate and Solid Free Standing Sediment Bucket.

OUTLET VARIATIONS (Specify type of outlet and pipe size in inches.)

Outlet Type	Outlet Designation Outlet Type/Pipe Size	"F" Body HT. DIM.	ADD
Inside Caulk	C02	8 5/8"	**N/C**
	C03, C04	8 3/4"	**N/C**
	C05, C06	8 1/2"	**N/C**
Threaded	T02	8 5/8"	**N/C**
	T03, T04	8 3/4"	**N/C**
	T05, T06	8 1/2"	**N/C**
No-Hub	Y02, Y03, Y04		**N/C**
	Y05, Y06	**See Fig. 2646Y for list add to THREADED body**	

OPTIONS:		ADD
-DG	Deflector Grate	**440.00**
-FP	Seepage Holes in Bucket	**174.00**
-G	Galvanized CI	**1,688.00**
-M	Ductile Iron Grate	**339.00**
-P	Trap Primer Conn	**210.00**
-S	Square Top (Add for CI only. For NB or PB, see below)	**441.00**
-SC	Solid Scoriated Cover	**748.00**
-SNB	Square Top, add to CI	**1,592.00**
-SPB	Square Top, add to CI	**1,380.00**
-U	Vandal Proof Grate	**188.00**

FIG. 2248 DEEP BODY HEAVY DUTY FLOOR DRAIN WITH 12" TOP W/TRACTOR GRATE AND SUSPENDED SLOTTED SEDIMENT BUCKET

FUNCTION: Used in heavy traffic areas where debris is anticipated and must be intercepted. Large deep body and bucket are adaptable to areas where heavy flow and considerable debris are expected.

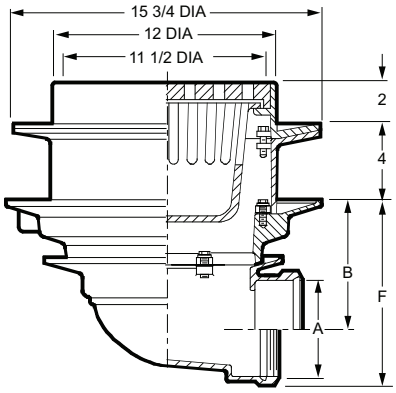

A OUTLET SIZE	TOP SIZE	FREE AREA SQ IN	B	†DUCO CI	DUCO CI PB TOP	DUCO CI NB TOP	APPROX. WEIGHT LBS
02"	12"	29	6 7/8"	**3,499.00**	**4,333.00**	**4,465.00**	70
03"	12"	29	6 3/8"	**3,499.00**	**4,333.00**	**4,465.00**	70
04"	12"	29	5 7/8"	**3,499.00**	**4,333.00**	**4,465.00**	70
05"	12"	29	5"	**3,499.00**	**4,333.00**	**4,465.00**	72
06"	12"	29	4 1/2"	**3,499.00**	**4,333.00**	**4,465.00**	72

REGULARLY FURNISHED: Duco Cast Iron Body and Flashing Collar with Cast Iron Grate and Suspended Slotted Sediment Bucket.

OUTLET VARIATIONS (Specify type of outlet and pipe size in inches.)

Outlet Type	Outlet Designation Outlet Type/Pipe Size	"F" Body HT. DIM.	ADD
Inside Caulk	C02	8 5/8"	**N/C**
	C03, C04	8 3/4"	**N/C**
	C05, C06	8 1/2"	**N/C**
Threaded	T02	8 5/8"	**N/C**
	T03, T04	8 3/4"	**N/C**
	T05, T06	8 1/2"	**N/C**
No-Hub	Y02, Y03, Y04		**N/C**
	Y05, Y06	**See Fig. 2646Y for list add to THREADED body**	

OPTIONS:		ADD
-BS	Bucket w/Mesh Screen	**536.00**
-DG	Deflector Grate	**440.00**
-FP	Seepage Holes in Bucket	**174.00**
-G	Galvanized CI	**1,688.00**
-M	Ductile Iron Grate	**339.00**
-P	Trap Primer Conn	**210.00**
-S	Square Top (Add for CI only. For NB or PB, see below)	**441.00**
-SC	Solid Scoriated Cover	**748.00**
-SNB	Square Top, add to CI	**1,592.00**
-SPB	Square Top, add to CI	**1,380.00**
-U	Vandal Proof Grate	**188.00**

†REGULARLY FURNISHED

FIG. 2250 LARGE CAPACITY HEAVY DUTY FLOOR DRAIN WITH 15" TOP W/TRACTOR GRATE AND SLOTTED SEDIMENT BUCKET

FUNCTION: For use in areas where heavy traffic occurs and water contains sediment and debris that must be intercepted. Large free area of top grate and deep sump handles large volume of water. Particularly suited for parking areas and playgrounds.

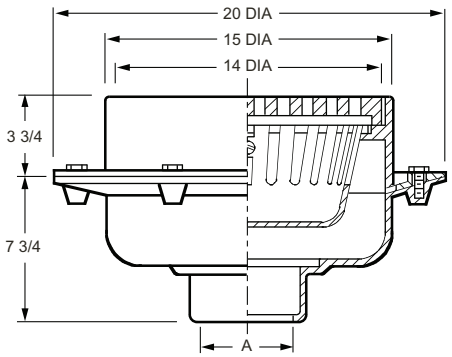

A OUTLET SIZE	TOP SIZE	FREE AREA SQ IN	†DUCO CI	DUCO CI PB TOP	DUCO CI NB TOP	APPROX. WEIGHT LBS
04, 05"	15"	45	**3,764.00**	**6,782.00**	**7,172.00**	110
06, 08"	15"	45	**3,764.00**	**6,782.00**	**7,172.00**	112

REGULARLY FURNISHED: Duco Cast Iron Body and Flashing Collar with Cast Iron ADA Tractor Grate and Slotted Sediment Bucket.

OUTLET VARIATIONS (Specify type of outlet and pipe size in inches.)

Outlet Type	Outlet Designation Outlet Type/Pipe Size	Body HT DIM	ADD
Inside Caulk	C04, C05, C06, C08	7 3/4"	**N/C**
Threaded	T04, T05, T06, T08	7 3/4"	**99.00**

OPTIONS:		ADD
-BS	Bucket w/Mesh Screen	**983.00**
-D	Dome Grate, CI	**516.00**
-DNB	Dome Grate, add to CI	**4,960.00**
-DPB	Dome Grate, add to CI	**4,314.00**
-G	Galvanized CI	**2,525.00**
-HC	2" High Collar	**N/C**
-M	Ductile Iron Grate	**847.00**
-S	Square Top (Add for CI & DI only)	**607.00**
	For NB or PB, see below	**607.00**
-SNB	Square Top, add to CI	**4,254.00**
-SPB	Square Top, add to CI	**3,820.00**
-U	Vandal Proof Grate	**264.00**

FIG. 2253 LARGE CAPACITY HEAVY DUTY FLOOR DRAIN WITH 15" TOP W/TRACTOR GRATE AND SLOTTED SEDIMENT BUCKET

FUNCTION: For use in areas where heavy traffic occurs and water contains sediment and debris that must be intercepted. Large free area of top grate and deep sump handles large volume of water. Particularly suited for parking areas and playgrounds.

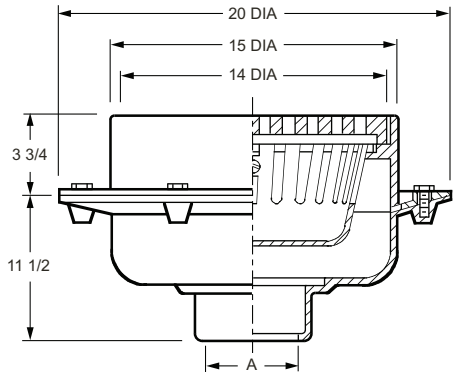

A OUTLET SIZE	TOP SIZE	FREE AREA SQ IN	†DUCO CI	DUCO CI PB TOP	DUCO CI NB TOP	APPROX. WEIGHT LBS
04, 05"	15"	45	**4,285.00**	**7,303.00**	**7,693.00**	110
06"	15"	45	**4,285.00**	**7,303.00**	**7,693.00**	112

REGULARLY FURNISHED: Duco Cast Iron Body and Flashing Collar with Cast Iron ADA Tractor Grate and Slotted Sediment Bucket.

OUTLET VARIATIONS (Specify type of outlet and pipe size in inches.)

Outlet Type	Outlet Designation Outlet Type/Pipe Size	Body HT DIM	ADD
Inside Caulk	C04, C05, C06	11 1/2"	**N/C**
Threaded	T04, T05, T06	11 1/2"	**99.00**

OPTIONS:		ADD
-BS	Bucket w/Mesh Screen	**983.00**
-D	Dome Grate, CI	**516.00**
-DNB	Dome Grate, add to CI	**4,960.00**
-DPB	Dome Grate, add to CI	**4,314.00**
-FBSCI	Flat Bottom Strainer	**123.00**
-G	Galvanized CI	**2,525.00**
-HC	2" High Collar	**N/C**
-M	Ductile Iron Grate	**847.00**
-S	Square Top (Add for CI & DI only)	**607.00**
	For NB or PB, see below	
-SNB	Square Top, add to CI	**4,254.00**
-SPB	Square Top, add to CI	**3,820.00**
-U	Vandal Proof Grate	**264.00**

†REGULARLY FURNISHED

FIG. 2255 LARGE CAPACITY HEAVY DUTY FLOOR DRAIN WITH 15" TOP W/TRACTOR GRATE AND SLOTTED SEDIMENT BUCKET

FUNCTION: For use in areas where heavy traffic occurs and water contains sediment and debris that must be intercepted. Large free area of top grate and deep sump handles large volume of water. Particularly suited for parking areas and playgrounds.

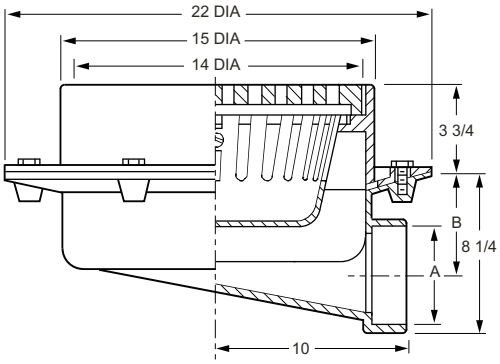

OUTLET VARIATIONS (Specify type of outlet and pipe size in inches.)

Outlet Type	Outlet Designation Outlet Type/Pipe Size	ADD
Inside Caulk Only	C05, C06	N/C

OPTIONS:		ADD
-BS	Bucket w/Mesh Screen	983.00
-D	Dome Grate, CI	516.00
-DNB	Dome Grate, add to CI	4,960.00
-DPB	Dome Grate, add to CI	4,314.00
-G	Galvanized CI	2,525.00
-HC	2" High Collar	N/C
-M	Ductile Iron Grate	847.00
-S	Square Top (Add for CI & DI only) For NB or PB, see below	607.00
-SNB	Square Top, add to CI	4,254.00
-SPB	Square Top, add to CI	3,820.00
-U	Vandal Proof Grate	264.00

A OUTLET SIZE	TOP SIZE	FREE AREA SQ IN	B	†DUCO CI	DUCO CI PB TOP	DUCO CI NB TOP	APPROX. WEIGHT LBS
05"	15"	45	4 7/8"	4,620.00	7,638.00	8,028.00	110
06"	15"	45	4 3/8"	4,620.00	7,638.00	8,028.00	112

REGULARLY FURNISHED: Duco Cast Iron Body and Flashing Collar with Cast Iron ADA Tractor Grate and Slotted Sediment Bucket.

FIG. 2270 SMALL AREA MEDIUM DUTY FLOOR DRAIN WITH 8 1/2" ROUND TOP W/BAR GRATE

FUNCTION: Used in areas with moderate traffic and where waste water contains no sediment or debris and construction requires a shallow body drain for on-grade applications.

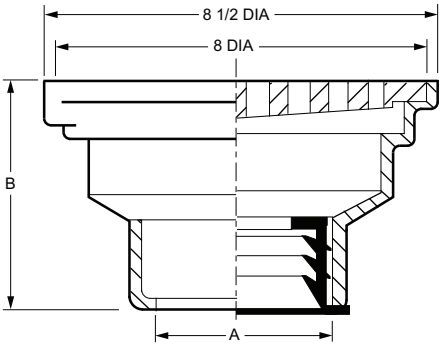

OUTLET VARIATIONS (Specify type of outlet and pipe size in inches.)

Outlet Type	Outlet Designation Outlet Type/Pipe Size	"B" Body HT. DIM.	ADD
Inside Caulk	C02, C03, C04	5"	N/C
Speedi-Set SW	L02, L03, L04	5"	N/C
Speedi-Set XH	LXH02, LXH03, LXH04	5"	N/C
Threaded	T02, T03, T04	3 1/2"	99.00
No-Hub	Y02, Y03, Y04	5"	N/C

OPTIONS:		ADD
-AB	Sediment Bucket, Alum	293.00
-B	Sediment Bucket, CI	177.00
-D	Dome Grate, CI	104.00
-DNB	Dome Grate, add to CI	1,171.00
-DPB	Dome Grate, add to CI	931.00
-FBSCI	Flat Bottom Strainer	76.00
-G	Galvanized CI	545.00
-H	Hinged Grate	327.00
-M	Ductile Iron Grate	271.00
-P	Trap Primer Conn.	210.00
-S	Square Top (Add for CI only. For NB or PB, see below)	414.00
-SNB	Square Top, add to CI	1,205.00
-SPB	Square Top, add to CI	998.00
-TG	Tractor Grate (Spec Fig. 2271)	177.00
-U	Vandal Proof Grate	188.00
-XP	Closure Plug, 02, 03"	507.00
	04"	847.00

A OUTLET SIZE	TOP SIZE	FREE AREA SQ IN	†DUCO CI	DUCO CI PB TOP	DUCO CI NB TOP	APPROX. WEIGHT LBS
02, 03, 04"	8 1/2"	14.25	415.00	978.00	1,108.00	13

REGULARLY FURNISHED: Duco Cast Iron Body and Loose Set Bar Grate.

†REGULARLY FURNISHED

FIG. 2275 SMALL AREA MEDIUM DUTY FLOOR DRAIN WITH 8 1/2" ROUND TOP W/BAR GRATE

FUNCTION: Used in areas with moderate traffic and where waste water contains no sediment or debris and construction requires a shallow body drain for-on grade applications.

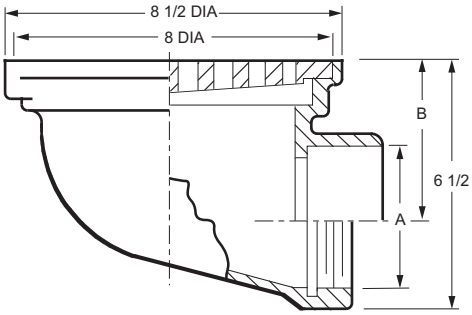

A OUTLET SIZE	TOP SIZE	FREE AREA SQ IN	B	†DUCO CI	DUCO CI PB TOP	DUCO CI NB TOP	APPROX. WEIGHT LBS
02"	8 1/2"	14.25	4 3/4"	**973.00**	**1,536.00**	**1,666.00**	20
03"	8 1/2"	14.25	4 1/4"	**973.00**	**1,536.00**	**1,666.00**	24
04"	8 1/2"	14.25	3 3/4"	**973.00**	**1,536.00**	**1,666.00**	24

REGULARLY FURNISHED: Duco Cast Iron Body and Loose Set Bar Grate.

OUTLET VARIATIONS (Specify type of outlet and pipe size in inches.)

Outlet Type	Outlet Designation Outlet Type/Pipe Size	ADD
Inside Caulk	C02, C03, C04	**N/C**
Threaded	T02, T03, T04	**N/C**
No-Hub	Y02, Y03, Y04	**See Fig. 2646Y for list add to THREADED body**

OPTIONS:		ADD
-AB	Sediment Bucket, Alum	**293.00**
-B	Sediment Bucket	**177.00**
-D	Dome Grate, CI	**104.00**
-DNB	Dome Grate, add to CI	**1,171.00**
-DPB	Dome Grate, add to CI	**931.00**
-G	Galvanized CI	**545.00**
-H	Hinged Grate	**327.00**
-M	Ductile Iron Grate	**271.00**
-P	Trap Primer Conn	**210.00**
-S	Square Top (Add for CI only. For NB or PB, see below)I	**414.00**
-SNB	Square Top, add to CI	**1,205.00**
-SPB	Square Top, add to CI	**998.00**
-TG	Tractor Grate (Specify 2276)	**177.00**
-U	Vandal Proof Grate	**188.00**

FIG. 2280 LIGHT DUTY FLOOR DRAIN WITH HINGED GRATE

FUNCTION: Used in light traffic in on-grade areas where the hinged grate eliminates loss of grate.

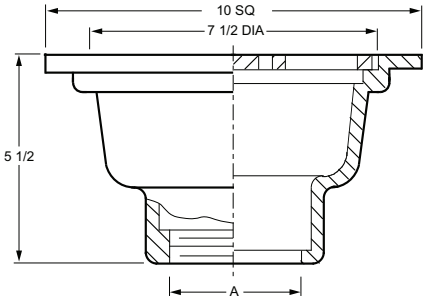

A OUTLET SIZE	TOP SIZE	FREE AREA SQ IN	†DUCO CI	DUCO CI PB TOP	DUCO CI NB TOP	APPROX. WEIGHT LBS
02"	10" SQ	16	**448.00**	**1,766.00**	**1,812.00**	20
03"	10" SQ	16	**593.00**	**1,911.00**	**1,957.00**	24
04"	10" SQ	16	**1,022.00**	**2,340.00**	**2,386.00**	29

REGULARLY FURNISHED: Duco Cast Iron Body and Slotted Hinged Grate.

OUTLET VARIATIONS (Specify type of outlet and pipe size in inches.)

Outlet Type	Outlet Designation Outlet Type/Pipe Size	ADD
Inside Caulk	C02, C03, C04	**N/C**
Threaded	T02, T03, T04	**99.00**
No-Hub	Y02, Y03, Y04	**See Fig. 2646Y for list add to THREADED body price**

OPTIONS:		ADD
-AB	Sediment Bucket, Alum	**293.00**
-B	Sediment Bucket, CI	**177.00**
-BT	Bell Trap	**137.00**
-D	Hinged Dome Grate	**252.00**
-G	Galvanized CI	**545.00**
-U	Vandal Proof Grate	**188.00**

FIG. 2285 LIGHT DUTY FLOOR DRAIN WITH HINGED GRATE

FUNCTION: Used in light traffic in on-grade areas where the hinged grate eliminates loss of grate.

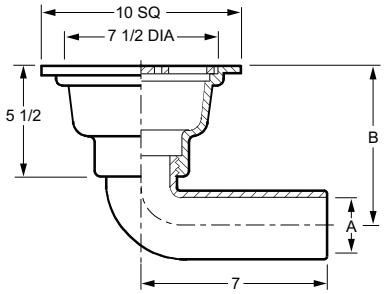

A OUTLET SIZE	TOP SIZE	FREE AREA SQ IN	B	†DUCO CI	DUCO CI PB TOP	DUCO CI NB TOP	APPROX. WEIGHT LBS
02"	10" SQ	16	8	**886.00**	**2,204.00**	**2,250.00**	20
03"	10" SQ	16	8 1/4	**1,277.00**	**2,595.00**	**2,641.00**	24
04"	10" SQ	16	8 1/2	**1,794.00**	**3,112.00**	**3,158.00**	29

REGULARLY FURNISHED: Duco Cast Iron Body and Slotted Hinged Grate.

OUTLET VARIATIONS (Specify type of outlet and pipe size in inches.)

Outlet Type	Outlet Designation Outlet Type/Pipe Size	ADD
Spigot	S02, S03, S04	**N/C**

OPTIONS:		ADD
-B	Sediment Bucket	**177.00**
-D	Hinged Dome Grate	**252.00**
-G	Galvanized CI	**625.00**
-U	Vandal Proof Grate	**188.00**

†REGULARLY FURNISHED

FIG. 2295 HEAVY DUTY FLOOR DRAIN

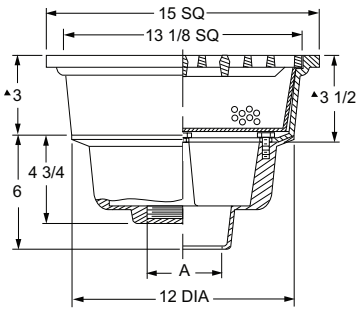

OUTLET VARIATIONS (Specify type of outlet and pipe size in inches.)

Outlet Type	Outlet Designation Outlet Type/Pipe Size	ADD
Inside Caulk	C02, C03, C04, C05, C06	**N/C**
Speedi-Set SW	L02, L03, L04	**N/C**
Speedi-Set XH	LXH02, LXH03, LXH04	**N/C**
Threaded	T02, T03, T04, T05, T06	**104.00**
No-Hub	Y02, Y03, Y04, Y05, Y06	**N/C**

OPTIONS:		ADD
-FBS	Flat Bottom Strainer	**57.00**
-G	Galvanized CI	**1,791.00**
-U	Vandal Proof Grate	**191.00**

▲Add 3/16" when Bronze Top is specified.

A OUTLET SIZE	TOP SIZE	FREE AREA SQ IN	†DUCO CI	DUCO CI PB TOP	DUCO CI NB TOP	APPROX. WEIGHT LBS
02, 03, 04, 05, 06"	15"	75	**4,254.00**	**6,109.00**	**6,588.00**	49

REGULARLY FURNISHED: Duco Cast Iron Body and Flashing Collar with Secured Ductile Iron Grate and Stainless Steel Sediment Bucket.

FIG. 2310 MEDIUM DUTY FLOOR DRAIN WITH 8 1/2" ROUND ADJUSTABLE TOP

FUNCTION: Used in moderate traffic areas in any type of floor construction. Adjustable top collar permits accurate positioning of grate to meet finished floor level.

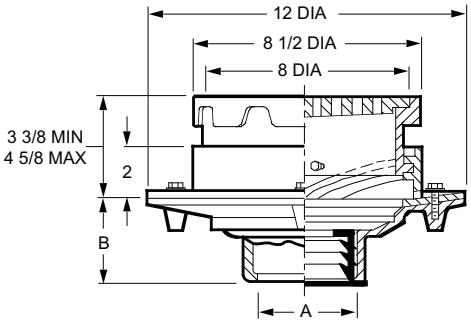

OUTLET VARIATIONS (Specify type of outlet and pipe size in inches.)

Outlet Type	Outlet Designation Outlet Type/Pipe Size	"B" Body HT. DIM.	ADD
Inside Caulk	C02, C03, C04	3 3/4"	**N/C**
Speedi-Set SW	L02, L03, L04	3 3/4"	**N/C**
Speedi-Set XH	LXH02, LXH03, LXH04	3 3/4"	**N/C**
Threaded	T02, T03, T04	2"	**99.00**
No-Hub	Y02, Y03, Y04	3 3/4"	**N/C**
No-Hub	Y06	3 3/4"	**174.00**

OPTIONS:		ADD
-B	Sediment Bucket	**177.00**
-D	Dome Grate, CI	**104.00**
-DBS	Dome Bottom Strainer, Aluminum	**150.00**
-DG	Deflector Grate	**264.00**
-DID*	Drain Installation Device	**265.00**
-DNB	Dome Grate, add to CI	**1,171.00**
-DPB	Dome Grate, add to CI	**931.00**
-E	Extension, ea 2" or fraction	**246.00**
-FBSCI	Flat Bottom Strainer, CI	**76.00**
-G	Galvanized CI	**693.00**
-H	Hinged Grate	**327.00**
-M	Ductile Iron Grate	**271.00**
-P	Trap Primer Connection	**210.00**
-S	Square Top (Add for CI only. For NB or PB, see below)	**414.00**
-SNB	Square Top, add to CI	**1,205.00**
-SPB	Square Top, add to CI	**998.00**
-U	Vandal Proof Grate	**188.00**
-XP	Closure Plug, 02, 03"	**507.00**
	04"	**847.00**

*Requires body modifications. Must be shipped complete w/drain from the factory.

A OUTLET SIZE	TOP SIZE	FREE AREA SQ IN	†DUCO CI	DUCO CI PB TOP	DUCO CI NB TOP	APPROX. WEIGHT LBS
02, 03, 04"	8 1/2"	14.25	**915.00**	**1,478.00**	**1,608.00**	31

REGULARLY FURNISHED: Duco Cast Iron Body and Flashing Collar with Adjustable Top and Bar Grate.

†REGULARLY FURNISHED

FIG. DX2312 WIDE FLANGE DECK DRAIN WITH 8 1/2" ROUND ADJUSTABLE TOP AND ADJUSTABLE LIP DIMENSION

FUNCTION: For use in floors where waterproof traffic bearing covering is applied. Top is adjustable to various floor covering thicknesses. Medium Duty.

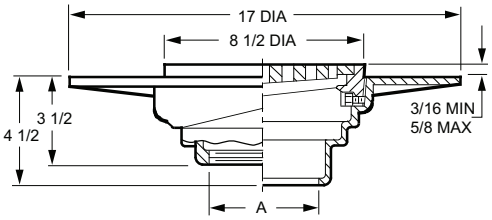

A OUTLET SIZE	TOP SIZE	FREE AREA SQ IN	†DUCO CI	DUCO CI PB TOP	DUCO CI NB TOP	APPROX. WEIGHT LBS
02, 03, 04"	8 1/2"	14.25	**1,036.00**	**1,599.00**	**1,729.00**	28

REGULARLY FURNISHED: Duco Cast Iron Body with Cast Iron Adjustable Top.

OUTLET VARIATIONS (Specify type of outlet and pipe size in inches.)

Outlet Type	Outlet Designation Outlet Type/Pipe Size	ADD
Inside Caulk	C02, C03, C04	**N/C**
Threaded	T02, T03, T04	**99.00**
No-Hub	Y02, Y03, Y04	**See Fig. 2646Y for list add to THREADED body price**

OPTIONS:		ADD
-ARI	ARC Inside	**767.00**
-ARIO	ARC In and Out	**1,018.00**
-B	Safe-Set Bucket	**164.00**
-G	Galvanized CI	**876.00**
-SH	Securing Holes	**156.00**
-U	Vandal Proof Grate	**188.00**

FIG. 2315 MEDIUM DUTY FLOOR DRAIN WITH 8 1/2" ROUND ADJUSTABLE TOP

FUNCTION: Used in moderate traffic areas in any type of floor construction. Adjustable top collar permits accurate positioning of grate to meet finished floor level.

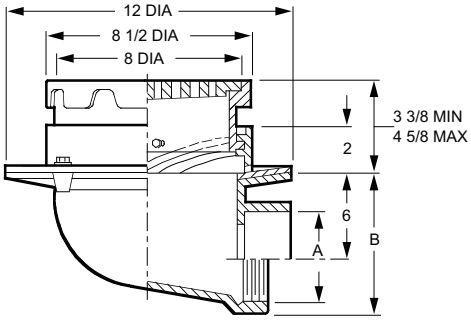

A OUTLET SIZE	TOP SIZE	FREE AREA SQ IN	B	†DUCO CI	DUCO CI PB TOP	DUCO CI NB TOP	APPROX. WEIGHT LBS
02"	8 1/2"	14.25	4 1/4	**1,472.00**	**2,035.00**	**2,165.00**	31
03"	8 1/2"	14.25	3 3/4	**1,472.00**	**2,035.00**	**2,165.00**	31
04"	8 1/2"	14.25	3 1/4	**1,472.00**	**2,035.00**	**2,165.00**	31

REGULARLY FURNISHED: Duco Cast Iron Body and Flashing Collar with Adjustable Top and Bar Grate.

OUTLET VARIATIONS (Specify type of outlet and pipe size in inches.)

Outlet Type	Outlet Designation Outlet Type/Pipe Size	ADD
Inside Caulk	C02, C03, C04	**N/C**
Threaded	T02, T03, T04	**N/C**
No-Hub	Y02, Y03, Y04	**See Fig. 2646Y for list add to THREADED body**

OPTIONS:		ADD
-AB	Sediment Bucket, Alum	**293.00**
-B	Sediment Bucket, CI	**177.00**
-D	Dome Grate, CI	**104.00**
-DG	Deflector Grate	**264.00**
-DNB	Dome Grate, add to CI	**1,171.00**
-DPB	Dome Grate, add to CI	**931.00**
-E	Extension, ea 2" or fract	**246.00**
-G	Galvanized CI	**693.00**
-H	Hinged Grate	**327.00**
-M	Ductile Iron Grate	**271.00**
-P	Trap Primer Conn	**210.00**
-S	Square Top (Add for CI only. For NB or PB, see below)	**414.00**
-SNB	Square Top, add to CI	**1,205.00**
-SPB	Square Top, add to CI	**998.00**
-U	Vandal Proof Grate	**188.00**

FIG. 2320 MEDIUM DUTY FLOOR DRAIN WITH 8 1/2" ROUND ADJUSTABLE TOP AND TRACTOR GRATE

FUNCTION: Used in moderate traffic areas where waste water contains no sediment or debris and floor construction requires shallow drain body. Body flange and flashing collar serve as anchor in on-grade locations and as flashing clamp when installed in waterproof floors. Adjustable top collar permits accurate positioning of grate to meet finished floor level.

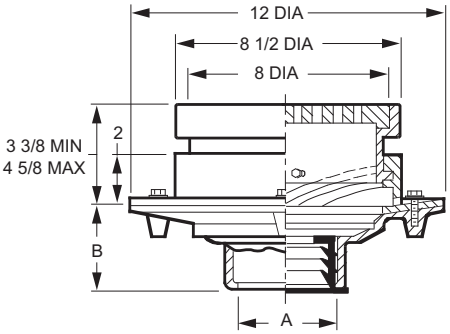

A OUTLET SIZE	TOP SIZE	FREE AREA SQ IN	†DUCO CI	DUCO CI PB TOP	DUCO CI NB TOP	APPROX. WEIGHT LBS
02, 03, 04"	8 1/2"	13	**1,120.00**	**1,683.00**	**1,813.00**	44

REGULARLY FURNISHED: Duco Cast Iron Body and Flashing Collar with Adjustable Top and Tractor Grate.

*Requires body modifications. Must be shipped complete w/drain from the factory.

OUTLET VARIATIONS (Specify type of outlet and pipe size in inches.)

Outlet Type	Outlet Designation Outlet Type/Pipe Size	"B" Body HT. DIM.	ADD
Inside Caulk	C02, C03, C04	3 3/4"	**N/C**
Speedi-Set SW	L02, L03, L04	3 3/4"	**N/C**
Speedi-Set XH	LXH02, LXH03, LXH04	3 3/4"	**N/C**
Threaded	T02, T03, T04	2"	**99.00**
No-Hub	Y02, Y03, Y04	3 3/4"	**N/C**
No-Hub	Y06	3 3/4"	**174.00**

OPTIONS:		ADD
-AB	Aluminum Bucket	**293.00**
-ARI	ARC Inside	**611.00**
-ARIO	ARC In and Out	**811.00**
-B	Sediment Bucket	**177.00**
-DID*	Drain Installation Device	**265.00**
-E	Extension, ea 2" or fract	**246.00**
-FBS	Alum Flat Bottom Strainer	**87.00**
-FBSCI	Flat Bottom Strainer, CI	**76.00**
-G	Galvanized CI	**693.00**
-M	Ductile Iron Grate	**274.00**
-P	Trap Primer Conn	**210.00**
-S	Square Top (Add for CI only. For NB or PB, see below)	**414.00**
-SC	Solid Scoriated Cover	**621.00**
-SNB	Square Top, add to CI	**1,205.00**
-SPB	Square Top, add to CI	**998.00**
-U	Vandal Proof Grate	**188.00**
-XP	Closure Plug, 02, 03"	**507.00**
	04"	**847.00**

†REGULARLY FURNISHED

FIG. 2325 MEDIUM DUTY FLOOR DRAIN WITH 8 1/2" ROUND ADJUSTABLE TOP AND TRACTOR GRATE

FUNCTION: Used in moderate traffic areas where waste water contains no sediment or debris and floor construction requires shallow drain body. Body flange and flashing collar serve as anchor in on-grade locations and as flashing clamp when installed in waterproof floors. Adjustable top collar permits accurate positioning of grate to meet finished floor level.

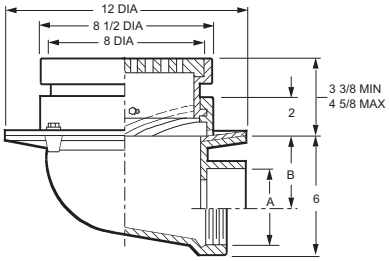

A OUTLET SIZE	TOP SIZE	FREE AREA SQ IN	B	†DUCO CI	DUCO CI PB TOP	DUCO CI NB TOP	APPROX. WEIGHT LBS
02"	8 1/2"	13	4 1/4"	**1,671.00**	**2,234.00**	**2,364.00**	44
03"	8 1/2"	13	3 3/4"	**1,671.00**	**2,234.00**	**2,364.00**	44
04"	8 1/2"	13	3 1/4"	**1,671.00**	**2,234.00**	**2,364.00**	44

REGULARLY FURNISHED: Duco Cast Iron Body and Flashing Collar with Adjustable Top and Tractor Grate.

OUTLET VARIATIONS (Specify type of outlet and pipe size in inches.)

Outlet Type	Outlet Designation Outlet Type/Pipe Size	ADD
Inside Caulk	C02, C03, C04	**N/C**
Threaded	T02, T03, T04	**N/C**
No-Hub	Y02, Y03, Y04	**See Fig. 2646Y for list add to THREADED body**

OPTIONS:		ADD
-AB	Aluminum Bucket	**293.00**
-B	Sediment Bucket	**177.00**
-E	Extension, ea 2" or fract	**246.00**
-G	Galvanized CI	**693.00**
-M	Ductile Iron Grate	**274.00**
-P	Trap Primer Conn	**210.00**
-S	Square Top (Add for CI only. For NB or PB, see below)	**414.00**
-SC	Solid Scoriated Cover	**621.00**
-SNB	Square Top, add to CI	**1,205.00**
-SPB	Square Top, add to CI	**998.00**
-U	Vandal Proof Grate	**188.00**

FIG. 2330 MEDIUM DUTY FLOOR DRAIN WITH 12" ROUND ADJUSTABLE TOP

FUNCTION: Used in medium traffic areas where large top drain is required. Adjustable top collar permits accurate positioning of top grate to meet finished floor level.

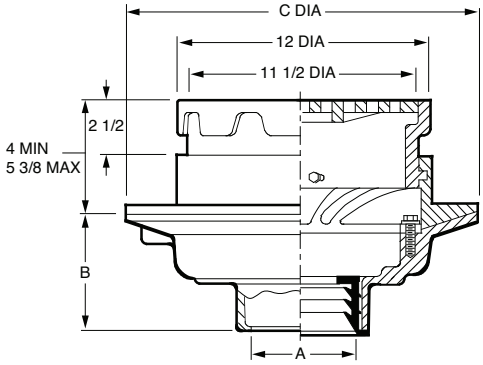

A OUTLET SIZE	TOP SIZE	FREE AREA SQ IN	C DIA	†DUCO CI	DUCO CI PB TOP	DUCO CI NB TOP	APPROX. WEIGHT LBS
02, 03, 04"	12"	28.5	15 1/4"	**2,182.00**	**3,016.00**	**3,148.00**	57
05, 06""	12"	28.5	15 1/4"	**2,182.00**	**3,016.00**	**3,148.00**	57

REGULARLY FURNISHED: Duco Cast Iron Body and Flashing Collar with Adjustable Top and Bar Grate.

OUTLET VARIATIONS (Specify type of outlet and pipe size in inches.)

Outlet Type	Outlet Designation Outlet Type/Pipe Size	"B" Body HT. DIM.	ADD
Inside Caulk	C02, C03, C04, C05, C06	5"	**N/C**
Speedi-Set SW	L02, L03, L04	5"	**N/C**
Speedi-Set XH	LXH02, LXH03, LXH04	5"	**N/C**
Threaded	T02, T03, T04, T05, T06	3 3/4"	**99.00**
No-Hub	Y02, Y03, Y04, Y05, Y06	5"	**N/C**

OPTIONS:		ADD
-B	Sediment Bucket	**327.00**
-D	Dome Grate, CI	**177.00**
-DID	Drain Installation Device	**458.00**
-DNB	Dome Grate, add to CI	**1,592.00**
-DPB	Dome Grate, add to CI	**1,380.00**
-E	Ext, ea 2" or fract	**316.00**
-FBSCI	Flat Bottom Strainer, CI	**76.00**
-FP	Frost Proof Bucket	**471.00**
-G	Galvanized CI	**1,036.00**
-H	Hinged Grate	**327.00**
-M	Ductile Iron Grate	**335.00**
-P	Trap Primer Conn	**210.00**
-S	Square Top (Add for CI only. For NB or PB, see below)	**441.00**
-SNB	Square Top, add to CI	**1,592.00**
-SPB	Square Top, add to CI	**1,380.00**
-U	Vandal Proof Grate	**188.00**

FIG. 2331 MEDIUM DUTY FLOOR DRAIN WITH 12" ROUND ADJUSTABLE TOP

FUNCTION: Used in medium traffic areas where large top drain is required. Adjustable top collar permits accurate positioning of top grate to meet finished floor level.

2331 Same as 2330 with shallow body

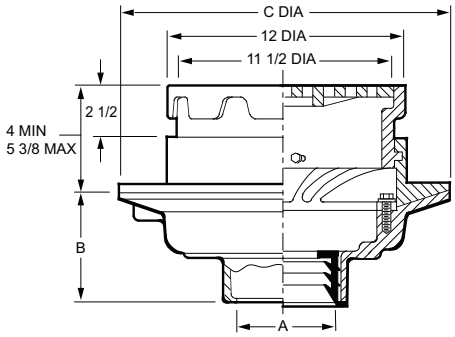

A OUTLET SIZE	TOP SIZE	FREE AREA SQ IN	C DIA	†DUCO CI	DUCO CI PB TOP	DUCO CI NB TOP	APPROX. WEIGHT LBS
02, 03, 04"	12"	28.5	16"	**1,896.00**	**2,730.00**	**2,862.00**	52
05, 06"	12"	28.5	16"	**1,896.00**	**2,730.00**	**2,862.00**	52

REGULARLY FURNISHED: Duco Cast Iron Body and Flashing Collar with Adjustable Top and Bar Grate.

OUTLET VARIATIONS (Specify type of outlet and pipe size in inches.)

Outlet Type	Outlet Designation Outlet Type/Pipe Size	"B" Body HT. DIM.	ADD
Inside Caulk	C02, C03, C04, C05, C06	3 3/4"	**N/C**
Threaded	T02, T03, T04, T05, T06	3 3/4"	**99.00**
No-Hub	Y02, Y03, Y04, Y05, Y06..		**See Fig. 2646Y for list add to THREADED body price**

OPTIONS:		ADD
-B	Sediment Bucket	**327.00**
-D	Dome Grate, CI	**177.00**
-DNB	Dome Grate, add to CI	**1,592.00**
-DPB	Dome Grate, add to CI	**1,380.00**
-E	Ext, ea 2" or fract	**316.00**
-FP	Frost Proof Bucket	**471.00**
-FBSCI	Flat Bottom Strainer, CI	**76.00**
-G	Galvanized CI	**1,036.00**
-H	Hinged Grate	**327.00**
-M	Ductile Iron Grate	**335.00**
-S	Square Top (Add for CI only. For NB or PB, see below)	**441.00**
-SNB	Square Top, add to CI	**1,592.00**
-SPB	Square Top, add to CI	**1,380.00**
-U	Vandal Proof Grate	**188.00**

†REGULARLY FURNISHED

FIG. 2335 MEDIUM DUTY FLOOR DRAIN WITH 12" ROUND ADJUSTABLE TOP

FUNCTION: Used in medium traffic areas where large top drain is required. Adjustable top collar permits accurate positioning of top grate to meet finished floor level.

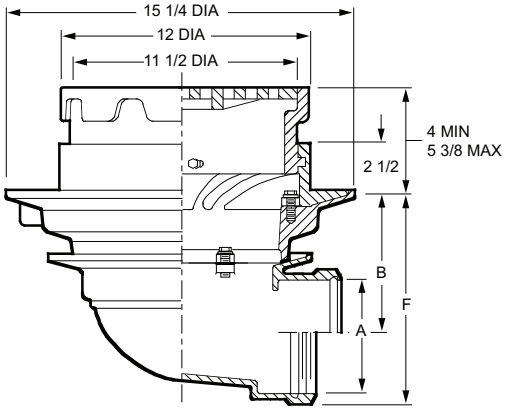

A OUTLET SIZE	TOP SIZE	FREE AREA SQ IN	B	†DUCO CI	DUCO CI PB TOP	DUCO CI NB TOP	APPROX. WEIGHT LBS
02"	12"	28.5	6 7/8"	**2,448.00**	**3,282.00**	**3,414.00**	76
03"	12"	28.5	6 3/8"	**2,448.00**	**3,282.00**	**3,414.00**	76
04"	12"	28.5	5 7/8"	**2,448.00**	**3,282.00**	**3,414.00**	76
05"	12"	28.5	5"	**2,448.00**	**3,282.00**	**3,414.00**	78
06"	12"	28.5	4 1/2"	**2,448.00**	**3,282.00**	**3,414.00**	78

REGULARLY FURNISHED: Duco Cast Iron Body and Flashing Collar with Adjustable Top and Bar Grate.

OUTLET VARIATIONS (Specify type of outlet and pipe size in inches.)

Outlet Type	Outlet Designation Outlet Type/Pipe Size	"F" Body HT. DIM.	ADD
Inside Caulk	C02	8 5/8"	**N/C**
	C03, C04	8 3/4"	**N/C**
	C05, C06	8 1/2"	**N/C**
Threaded	T02	8 5/8"	**N/C**
	T03, T04	8 3/4"	**N/C**
	T05, T06	8 1/2"	**N/C**
No-Hub	Y02	8 5/8"	**N/C**
	Y03, Y04	8 3/4"	**N/C**
	Y05, Y06	**See Fig. 2646Y for list add to THREADED body**	

OPTIONS:		ADD
-B	Sediment Bucket	**327.00**
-D	Dome Grate, CI	**177.00**
-DNB	Dome Grate, add to CI	**1,592.00**
-DPB	Dome Grate, add to CI	**1,380.00**
-E	Ext, ea 2" or fract	**316.00**
-G	Galvanized CI	**1,036.00**
-H	Hinged Grate	**327.00**
-M	Ductile Iron Grate	**335.00**
-S	Square Top (Add for CI only. For NB or PB, see below)	**441.00**
-SNB	Square Top, add to CI	**1,592.00**
-SPB	Square Top, add to CI	**1,380.00**
-U	Vandal Proof Grate	**188.00**

FIG. 2340 HEAVY DUTY FLOOR DRAIN WITH 12" ROUND ADJUSTABLE TOP AND TRACTOR GRATE

FUNCTION: Used in heavy duty traffic areas where large top drain is required. Adjustable top collar permits accurate positioning of grate to meet finished floor level.

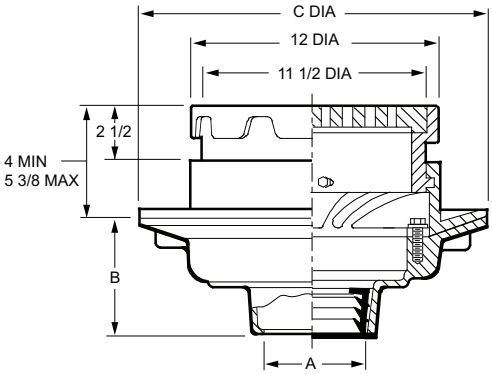

A OUTLET SIZE	TOP SIZE	FREE AREA SQ IN	C DIA	†DUCO CI	DUCO CI PB TOP	DUCO CI NB TOP	APPROX. WEIGHT LBS
02, 03, 04"	12"	29	15 1/4"	**2,303.00**	**3,137.00**	**3,269.00**	62
05, 06"	12"	29	15 1/4"	**2,303.00**	**3,137.00**	**3,269.00**	64

REGULARLY FURNISHED: Duco Cast Iron Body and Flashing Collar with Adjustable Top and Tractor Grate.

OUTLET VARIATIONS (Specify type of outlet and pipe size in inches.)

Outlet Type	Outlet Designation Outlet Type/Pipe Size	"B" Body HT. DIM.	ADD
Inside Caulk	C02, C03, C04, C05, C06	5"	**N/C**
Speedi-Set SW	L02, L03, L04	5"	**N/C**
Speedi-Set XH	LXH02, LXH03, LXH04	5"	**N/C**
Threaded	T02, T03, T04, T05, T06	3 3/4"	**99.00**
No-Hub	Y02, Y03, Y04, Y05, Y06	5"	**N/C**

OPTIONS:		ADD
-B	Sediment Bucket	**327.00**
-DID	Drain Installation Device	**458.00**
-FBSCI	Flat Bottom Strainer, CI	**76.00**
-FP	Frost Proof Bucket	**471.00**
-E	Ext, ea 2" or fract	**316.00**
-G	Galvanized CI	**1,036.00**
-M	Ductile Iron Grate	**335.00**
-P	Trap Primer Conn	**210.00**
-S	Square Top (Add for CI only. For NB or PB, see below)	**441.00**
-SNB	Square Top, add to CI	**1,592.00**
-SPB	Square Top, add to CI	**1,380.00**
-U	Vandal Proof Grate	**188.00**

†REGULARLY FURNISHED

FIG. 2341 HEAVY DUTY FLOOR DRAIN WITH 12" ROUND ADJUSTABLE TOP AND TRACTOR GRATE

FUNCTION: Used in heavy duty traffic areas where large top drain is required. Adjustable top collar permits accurate positioning of grate to meet finished floor level.

2341 Same as 2340 with shallow body

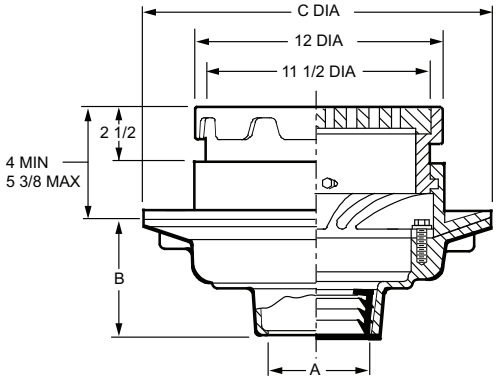

A OUTLET SIZE	TOP SIZE	FREE AREA SQ IN	C DIA	†DUCO CI	DUCO CI PB TOP	DUCO CI NB TOP	APPROX. WEIGHT LBS
02, 03, 04"	12"	29	16"	**2,303.00**	**3,137.00**	**3,269.00**	57
05, 06"	12"	29	16"	**2,303.00**	**3,137.00**	**3,269.00**	59

REGULARLY FURNISHED: Duco Cast Iron Body and Flashing Collar with Adjustable Top and Tractor Grate.

OUTLET VARIATIONS (Specify type of outlet and pipe size in inches.)

Outlet Type	Outlet Designation Outlet Type/Pipe Size	"B" Body HT. DIM.	ADD
Inside Caulk	C02, C03, C04, C05, C06	3 3/4"	**N/C**
Threaded	T02, T03, T04, T05, T06	3 3/4"	**99.00**
No-Hub	Y02, Y03, Y04, Y05, Y06	**See Fig. 2646Y for list add to THREADED body price**	

OPTIONS:		ADD
-B	Sediment Bucket	**327.00**
-E	Ext., ea 2" or fract.	**316.00**
-FBSCI	Flat Bottom Strainer, CI	**76.00**
-FP	Frost Proof Sediment Bucket	**471.00**
-G	Galvanized CI	**1,036.00**
-M	Ductile Iron Grate	**335.00**
-P	Trap Primer Connection	**210.00**
-S	Square Top (Add for CI only. For NB or PB, see below)	**441.00**
-SNB	Square Top, add to CI	**1,592.00**
-SPB	Square Top, add to CI	**1,380.00**
-U	Vandal Proof Grate	**188.00**

FIG. 2345 HEAVY DUTY FLOOR DRAIN WITH 12" ROUND ADJUSTABLE TOP AND TRACTOR GRATE

FUNCTION: Used in heavy duty traffic areas where large top drain is required. Adjustable top collar permits accurate positioning of grate to meet finished floor level.

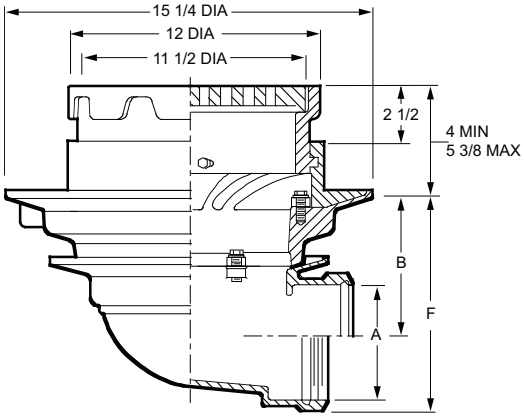

A OUTLET SIZE	TOP SIZE	FREE AREA SQ IN	B	†DUCO CI	DUCO CI PB TOP	DUCO CI NB TOP	APPROX. WEIGHT LBS
02"	12"	29	6 7/8"	**2,860.00**	**3,694.00**	**3,826.00**	74
03"	12"	29	6 3/8"	**2,860.00**	**3,694.00**	**3,826.00**	74
04"	12"	29	5 7/8"	**2,860.00**	**3,694.00**	**3,826.00**	74
05"	12"	29	5"	**2,860.00**	**3,694.00**	**3,826.00**	76
06"	12"	29	4 1/2"	**2,860.00**	**3,694.00**	**3,826.00**	76

REGULARLY FURNISHED: Duco Cast Iron Body and Flashing Collar with Adjustable Top and Tractor Grate.

OUTLET VARIATIONS (Specify type of outlet and pipe size in inches.)

Outlet Type	Outlet Designation Outlet Type/Pipe Size	"F" Body HT. DIM.	ADD
Inside Caulk	C02	8 5/8"	**N/C**
	C03, C04	8 3/4"	**N/C**
	C05, C06	8 1/2"	**N/C**
Threaded	T02	8 5/8"	**N/C**
	T03, T04	8 3/4"	**N/C**
	T05, T06	8 1/2"	**N/C**
No-Hub	Y02	8 5/8"	**N/C**
	Y03, Y04	8 3/4"	**N/C**
	Y05, Y06	**See Fig. 2646Y for list add to THREADED body**	

OPTIONS:		ADD
-B	Sediment Bucket	**327.00**
-E	Ext., ea 2" or fract	**316.00**
-G	Galvanized CI	**1,036.00**
-M	Ductile Iron Grate	**335.00**
-P	Trap Primer Conn	**210.00**
-S	Square Top (Add for CI only. For NB or PB, see below)	**441.00**
-SNB	Square Top, add to CI	**1,592.00**
-SPB	Square Top, add to CI	**1,380.00**
-U	Vandal Proof Grate	**188.00**

†REGULARLY FURNISHED

FIG. 2350 FLOOR DRAIN WITH 8 1/2" ROUND ADJUSTABLE TOP AND "SAFE-SET" SEDIMENT BUCKET

FUNCTION: Used in any type of floor construction where accurate positioning of grate is necessary to meet finished floor level and where waste water contains solids or debris that must be intercepted. "Safe-Set" design insures bucket replacement after cleaning, since top grate cannot be inserted unless bucket is in place. Light Duty.

Load Rating: Light Duty having a Safe Live (Static) Load less than 2,000 lbs. (900 kg) per ASME A112.6.3 Floor Drain Standard.
For the specific Safe Live Load rating of any grate, contact the Smith representative or factory direct.

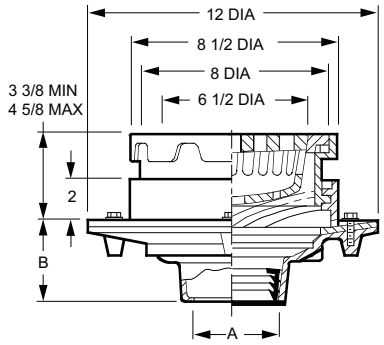

A OUTLET SIZE	TOP SIZE	FREE AREA SQ IN	†DUCO CI	DUCO CI PB TOP	DUCO CI NB TOP	APPROX. WEIGHT LBS
02, 03, 04"	8 1/2"	10.5	**1,063.00**	**1,626.00**	**1,756.00**	50

REGULARLY FURNISHED: Duco Cast Iron Body and Flashing Collar with Adjustable Top and Bar Grate with Sediment Bucket.

OUTLET VARIATIONS (Specify type of outlet and pipe size in inches.)

Outlet Type	Outlet Designation Outlet Type/Pipe Size	"B" Body HT. DIM.	ADD
Inside Caulk	C02, C03, C04	3 3/4"	**N/C**
Speedi-Set SW	L02, L03, L04	3 3/4"	**N/C**
Speedi-Set XH	LXH02, LXH03, LXH04	3 3/4"	**N/C**
Threaded	T02, T03, T04	2"	**99.00**
No-Hub	Y02, Y03, Y04	3 3/4"	**N/C**
No-Hub	Y06	3 3/4"	**174.00**

OPTIONS:		ADD
-D	Dome Grate, CI	**104.00**
-DID*	Drain Installation Device	**265.00**
-DNB	Dome Grate, add to CI	**1,171.00**
-DPB	Dome Grate, add to CI	**931.00**
-E	Ext, ea 2" or fract	**246.00**
-FBSCI	Flat Bottom Strainer, CI	**76.00**
-G	Galvanized CI	**750.00**
-MBG	Ductile Iron Bucket & Grate	**640.00**
-P	Trap Primer Conn	**210.00**
-S	Square Top (Add for CI only. For NB or PB, see below)	**414.00**
-SNB	Square Top, add to CI	**1,205.00**
-SPB	Square Top, add to CI	**998.00**
-U	Vandal Proof Grate	**188.00**

*Requires body modifications. Must be shipped complete w/drain from the factory.

FIG. 2355 FLOOR DRAIN WITH 8 1/2" ROUND ADJUSTABLE TOP AND "SAFE-SET" SEDIMENT BUCKET

FUNCTION: Used in any type of floor construction where accurate positioning of grate is necessary to meet finished floor level and where waste water contains solids or debris that must be intercepted. "Safe-Set" design insures bucket replacement after cleaning, since top grate cannot be inserted unless bucket is in place. Light Duty.

Load Rating: Light Duty having a Safe Live (Static) Load less than 2,000 lbs. (900 kg) per ASME A112.6.3 Floor Drain Standard.
For the specific Safe Live Load rating of any grate, contact the Smith representative or factory direct.

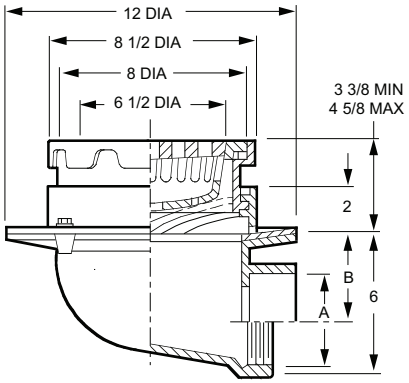

A OUTLET SIZE	TOP SIZE	FREE AREA SQ IN	B	†DUCO CI	DUCO CI PB TOP	DUCO CI NB TOP	APPROX. WEIGHT LBS
02"	8 1/2"	10.5	4 1/4"	**1,345.00**	**1,908.00**	**2,038.00**	62
03"	8 1/2"	10.5	3 3/4"	**1,345.00**	**1,908.00**	**2,038.00**	62
04"	8 1/2"	10.5	3 1/4"	**1,345.00**	**1,908.00**	**2,038.00**	62

REGULARLY FURNISHED: Duco Cast Iron Body and Flashing Collar with Adjustable Top and Bar Grate with Sediment Bucket.

OUTLET VARIATIONS (Specify type of outlet and pipe size in inches.)

Outlet Type	Outlet Designation Outlet Type/Pipe Size	ADD
Inside Caulk	C02, C03, C04	**N/C**
Threaded	T02, T03, T04	**N/C**
No-Hub	Y02, Y03, Y04	**See Fig. 2646Y for list add to THREADED body**

OPTIONS:		ADD
-D	Dome Grate, CI	**104.00**
-DNB	Dome Grate, add to CI	**1,171.00**
-DPB	Dome Grate, add to CI	**931.00**
-E	Extension, ea 2" or fract	**246.00**
-G	Galvanized CI	**750.00**
-MBG	Ductile Iron Bucket & Grate	**640.00**
-P	Trap Primer Conn	**210.00**
-S	Square Top (Add for CI only. For NB or PB, see below)	**414.00**
-SNB	Square Top, add to CI	**1,205.00**
-SPB	Square Top, add to CI	**998.00**
-U	Vandal Proof Grate	**188.00**

†REGULARLY FURNISHED

FIG. 2360 MEDIUM DUTY FLOOR DRAIN WITH 12" ROUND ADJUSTABLE TOP AND "SAFE-SET" SEDIMENT BUCKET

FUNCTION: Used in moderate traffic areas in any type of floor construction where accurate positioning of grate is necessary to meet the finished floor level and where the waste water contains solids and debris that must be intercepted. Large top will accept higher flow rates. "Safe-Set" design insures bucket replacement after cleaning since top grate cannot be inserted unless bucket is in place.

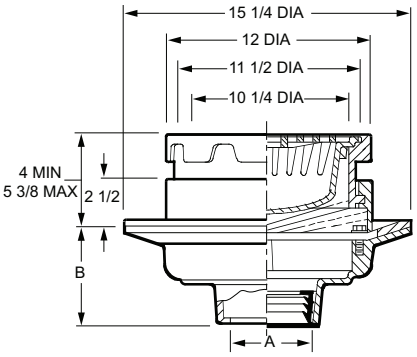

A OUTLET SIZE	TOP SIZE	FREE AREA SQ IN	†DUCO CI	DUCO CI PB TOP	DUCO CI NB TOP	APPROX. WEIGHT LBS
02, 03, 04"	12"	25.5	**2,484.00**	**3,318.00**	**3,450.00**	87
05, 06"	12"	25.5	**2,484.00**	**3,318.00**	**3,450.00**	89

REGULARLY FURNISHED: Duco Cast Iron Body and Flashing Collar with Adjustable Top and Bar Grate with Sediment Bucket.

OUTLET VARIATIONS (Specify type of outlet and pipe size in inches.)

Outlet Type	Outlet Designation Outlet Type/Pipe Size	"B" Body HT. DIM.	ADD
Inside Caulk	C02, C03, C04, C05, C06	5"	**N/C**
Speedi-Set SW	L02, L03, L04	5"	**N/C**
Speedi-Set XH	LXH02, LXH03, LXH04	5"	**N/C**
Threaded	T02, T03, T04, T05, T06	3"	**99.00**
No-Hub	Y02, Y03, Y04, Y05, Y06	5"	**N/C**

OPTIONS:		ADD
-ARIO	ARC In and Out	**1,580.00**
-DID	Drain Installation Device	**265.00**
-E	Adjus Ext, 4 1/2 to 6"	**316.00**
-FBSCI	Flat Bottom Strainer, CI	**76.00**
-G	Galvanized CI	**1,341.00**
-H	Hinged Grate	**327.00**
-MBG	Ductile Iron Bucket & Grate	**878.00**
-P	Trap Primer Conn	**210.00**
-S	Square Top (Add for CI only. For NB or PB, see below)	**441.00**
-SNB	Square Top, add to CI	**1,592.00**
-SPB	Square Top, add to CI	**1,380.00**
-U	Vandal Proof Grate	**188.00**

FIG. 2365 MEDIUM DUTY FLOOR DRAIN WITH 12" ROUND ADJUSTABLE TOP AND "SAFE-SET" SEDIMENT BUCKET

FUNCTION: Used in moderate traffic areas in any type of floor construction where accurate positioning of grate is necessary to meet the finished floor level and where the waste water contains solids and debris that must be intercepted. Large top will accept higher flow rates. "Safe-Set" design insures bucket replacement after cleaning since top grate cannot be inserted unless bucket is in place.

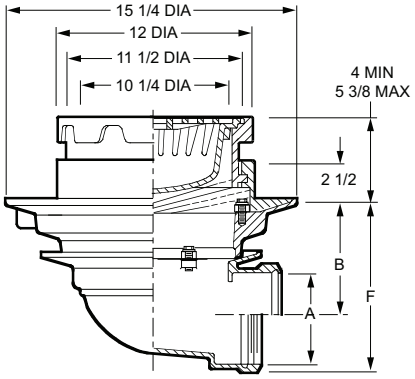

A OUTLET SIZE	TOP SIZE	FREE AREA SQ IN	B	†DUCO CI	DUCO CI PB TOP	DUCO CI NB TOP	APPROX. WEIGHT LBS
02"	12"	25.5	6 7/8"	**3,039.00**	**3,873.00**	**4,005.00**	95
03"	12"	25.5	6 3/8"	**3,039.00**	**3,873.00**	**4,005.00**	95
04"	12"	25.5	5 7/8"	**3,039.00**	**3,873.00**	**4,005.00**	95
05"	12"	25.5	5"	**3,039.00**	**3,873.00**	**4,005.00**	97
06"	12"	25.5	4 1/2"	**3,039.00**	**3,873.00**	**4,005.00**	97

REGULARLY FURNISHED: Duco Cast Iron Body and Flashing Collar with Adjustable Top and Bar Grate with Sediment Bucket.

OUTLET VARIATIONS (Specify type of outlet and pipe size in inches.)

Outlet Type	Outlet Designation Outlet Type/Pipe Size	"F" Body HT. DIM.	ADD
Inside Caulk	C02	8 5/8"	**N/C**
	C03, C04	8 3/4"	**N/C**
	C05, C06	8 1/2"	**N/C**
Threaded	T02	8 5/8"	**N/C**
	T03, T04	8 3/4"	**N/C**
	T05, T06	8 1/2"	**N/C**
No-Hub	Y02	8 5/8"	**N/C**
	Y03, Y04	8 3/4"	**N/C**
	Y05, Y06	**See Fig. 2646Y for list add to THREADED body**	

OPTIONS:		ADD
-E	Ext, ea 2" or fract	**316.00**
-G	Galvanized CI	**1,341.00**
-H	Hinged Grate	**327.00**
-M	Ductile Iron Grate Only	**335.00**
-MBG	Ductile Iron Bucket & Grate	**878.00**
-S	Square Top (Add for CI only. For NB or PB, see below)	**441.00**
-SNB	Square Top, add to CI	**1,592.00**
-SPB	Square Top, add to CI	**1,380.00**
-U	Vandal Proof Grate	**188.00**

†REGULARLY FURNISHED

FIG. 2410 TRAFFIC FLOOR DRAIN WITH 12" SQUARE TOP AND FREE STANDING SEDIMENT BUCKET

FUNCTION: Used in boiler rooms, industrial plants and other applicable areas where waste water contains debris or salvageable materials which must be intercepted. Large hinged grate permits easy access for bucket removal. Light Duty.

2410
Same as
2415
less Flange

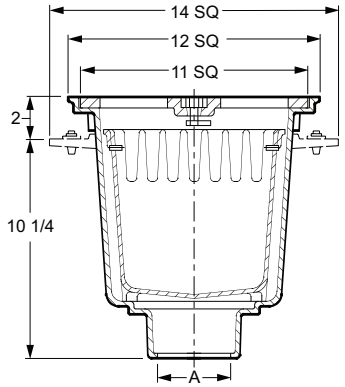

A OUTLET SIZE	TOP SIZE	FREE AREA SQ IN	†DUCO CI	DUCO CI PB TOP	DUCO CI NB TOP	APPROX. WEIGHT LBS
03, 04"	12" SQ	27	**2,618.00**	**3,789.00**	**4,027.00**	85
05, 06"	12" SQ	27	**2,618.00**	**3,789.00**	**4,027.00**	85

REGULARLY FURNISHED: Duco Cast Iron Body with Hinged Grate, Locking Device and Sediment Bucket.

OUTLET VARIATIONS (Specify type of outlet and pipe size in inches.)

Outlet Type	Outlet Designation Outlet Type/Pipe Size	ADD
Inside Caulk	C03, C04, C05, C06	**N/C**
Threaded	T03, T04, T05, T06	**99.00**
No-Hub	Y03, Y04, Y05, Y06	**N/C**

OPTIONS:		ADD
-ARI	ARC Inside	**1,001.00**
-ARIO	ARC In and Out	**1,326.00**
-FBSCI	Flat Bottom Strainer, CI	**123.00**
-G	Galvanized CI	**1,140.00**
-M	Ductile Iron Grate	**777.00**
-P	Trap Primer Conn	**210.00**
-SC	Solid Scoriated Cover	
	‘S316 With/CI Solid Hinged Cover & Lift Ring	**821.00**
	‘S314 With/CI Solid Hinged Cover & Locking Device	**1,220.00**
	‘S317 With/DI Solid Hinged Cover & Lift Ring	**1,484.00**
	‘S315 With/DI Solid Hinged Cover & Locking Device	**1,889.00**
-SSM	SS Mesh on Bucket	**536.00**
-U	Vandal Proof Grate	**188.00**
		DEDUCT
-LB	Less Bucket	**214.00**
-LLD	Less Locking Device	**400.00**
-LSG	Loose Set Grate	**705.00**

FIG. 2415 TRAFFIC FLOOR DRAIN WITH 12" SQUARE TOP AND FREE STANDING SEDIMENT BUCKET

FUNCTION: Used in boiler rooms, industrial plants and other applicable areas where waste water contains debris or salvageable materials which must be intercepted. Large hinged grate permits easy access for bucket removal. Light Duty.

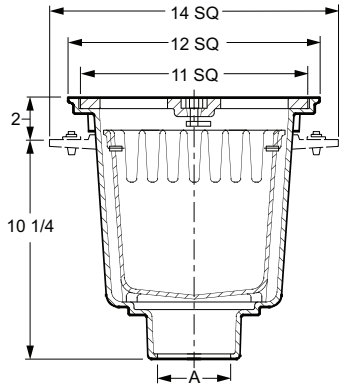

A OUTLET SIZE	TOP SIZE	FREE AREA SQ IN	†DUCO CI	DUCO CI PB TOP	DUCO CI NB TOP	APPROX. WEIGHT LBS
03, 04"	12" SQ	27	**2,618.00**	**3,789.00**	**4,027.00**	85
05, 06"	12" SQ	27	**2,618.00**	**3,789.00**	**4,027.00**	85

REGULARLY FURNISHED: Duco Cast Iron Body with Hinged Grate, Locking Device and Sediment Bucket.

OUTLET VARIATIONS (Specify type of outlet and pipe size in inches.)

Outlet Type	Outlet Designation Outlet Type/Pipe Size	ADD
Inside Caulk	C03, C04, C05, C06	**N/C**
Threaded	T03, T04, T05, T06	**99.00**
No-Hub	Y03, Y04, Y05, Y06	**N/C**

OPTIONS:		ADD
-ARI	ARC Inside	**1,001.00**
-ARIO	ARC In and Out	**1,326.00**
-C	Flashing Clamp	**N/C**
-FBSCI	Flat Bottom Strainer, CI	**123.00**
-G	Galvanized CI	**1,140.00**
-M	Ductile Iron Grate	**777.00**
-P	Trap Primer Conn	**210.00**
-SSM	SS Mesh on Bucket	**536.00**
-SC	Solid Scoriated Cover	
	‘S316 With/CI Solid Hinged Cover & Lift Ring	**821.00**
	‘S314 With/CI Solid Hinged Cover & Locking Device	**1,220.00**
	‘S317 With/DI Solid Hinged Cover & Lift Ring	**1,484.00**
	‘S315 With/DI Solid Hinged Cover & Locking Device	**1,889.00**
-U	Vandal Proof Grate	**188.00**
		DEDUCT
-LB	Less Bucket	**214.00**
-LLD	Less Locking Device	**400.00**
-LSG	Loose Set Grate	**705.00**

†REGULARLY FURNISHED

FIG. 2420 TRAFFIC FLOOR DRAIN WITH 12" SQUARE TOP AND FREE STANDING SEDIMENT BUCKET

FUNCTION: Used in boiler rooms, industrial plants and other applicable areas where waste water contains debris or salvageable materials which must be intercepted. Large hinged grate permits easy access for bucket removal. Medium Duty.

2420
Same as
2425
less Flange

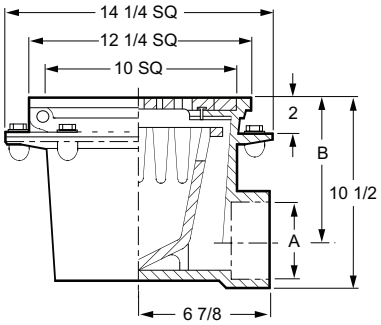

A OUTLET SIZE	TOP SIZE	FREE AREA SQ IN	B	C	†DUCO CI	DUCO CI PB TOP	DUCO CI NB TOP	APPROX. WEIGHT LBS
03"	12" SQ	27	8 1/4"	10 3/4"	**2,859.00**	**4,030.00**	**4,268.00**	65
04"	12" SQ	27	7 3/4"	10 3/4"	**2,859.00**	**4,030.00**	**4,268.00**	65
05"	12" SQ	27	7 1/4"	10 7/8"	**2,859.00**	**4,030.00**	**4,268.00**	65
06"	12" SQ	27	6 3/4"	10 7/8"	**2,859.00**	**4,030.00**	**4,268.00**	65

REGULARLY FURNISHED: Duco Cast Iron Body with Hinged Grate, Locking Device and Sediment Bucket.

OUTLET VARIATIONS (Specify type of outlet and pipe size in inches.)

Outlet Type	Outlet Designation Outlet Type/Pipe Size	ADD
Inside Caulk Only	C03, C04, C05, C06	**N/C**

OPTIONS:		ADD
-ARI	ARC Inside	**1,001.00**
-ARIO	ARC In and Out	**1,326.00**
-G	Galvanized CI	**1,140.00**
-M	Ductile Iron Grate	**777.00**
-P	Trap Primer Conn	**210.00**
-SC	Solid Scoriated Cover	**POA**
-SSM	SS Mesh on Bucket	**536.00**
-U	Vandal Proof Grate	**188.00**

		DEDUCT
-LB	Less Bucket	**214.00**
-LLD	Less Locking Device	**400.00**
-LSG	Loose Set Grate	**705.00**

▲Add 3/16" when bronze top is specified.

FIG. 2425 TRAFFIC FLOOR DRAIN WITH 12" SQUARE TOP AND FREE STANDING SEDIMENT BUCKET

FUNCTION: Used in boiler rooms, industrial plants and other applicable areas where waste water contains debris or salvageable materials which must be intercepted. Large hinged grate permits easy access for bucket removal. Medium Duty.

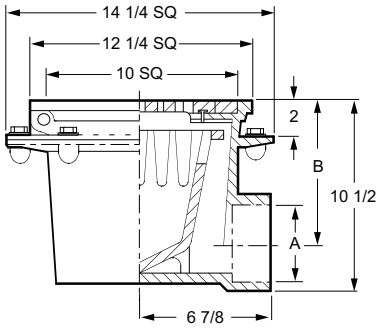

A OUTLET SIZE	TOP SIZE	FREE AREA SQ IN	B	C	†DUCO CI	DUCO CI PB TOP	DUCO CI NB TOP	APPROX. WEIGHT LBS
03"	12" SQ	27	8 1/4"	10 3/4"	**2,859.00**	**4,030.00**	**4,268.00**	65
04"	12" SQ	27	7 3/4"	10 3/4"	**2,859.00**	**4,030.00**	**4,268.00**	65
05"	12" SQ	27	7 1/4"	10 7/8"	**2,859.00**	**4,030.00**	**4,268.00**	65
06"	12" SQ	27	6 3/4"	10 7/8"	**2,859.00**	**4,030.00**	**4,268.00**	65

REGULARLY FURNISHED: Duco Cast Iron Body with Hinged Grate, Locking Device and Sediment Bucket.

OUTLET VARIATIONS (Specify type of outlet and pipe size in inches.)

Outlet Type	Outlet Designation Outlet Type/Pipe Size	ADD
Inside Caulk Only	C03, C04, C05, C06	**N/C**

OPTIONS:		ADD
-ARI	ARC Inside	**1,001.00**
-ARIO	ARC In and Out	**1,326.00**
-C	Flashing Clamp	**N/C**
-G	Galvanized CI	**1,140.00**
-M	Ductile Iron Grate	**777.00**
-P	Trap Primer Conn	**210.00**
-SC	Solid Scoriated Cover	**POA**
-SSM	SS Mesh on Bucket	**536.00**
-U	Vandal Proof Grate	**188.00**

		DEDUCT
-LB	Less Bucket	**214.00**
-LLD	Less Locking Device	**400.00**
-LSG	Loose Set Grate	**705.00**

▲Add 3/16" when bronze top is specified.

†REGULARLY FURNISHED

FIG. 2450 TRAFFIC FLOOR DRAIN WITH LARGE CAPACITY SEDIMENT BUCKET

FUNCTION: Used in heavy traffic areas in industrial plants and boiler rooms. Suspended sediment bucket collects debris such as grit and other solids. Large top and deep body will handle large flow of water. Cast Iron Grate - Medium Duty. Ductile Iron Grate - Heavy Duty.

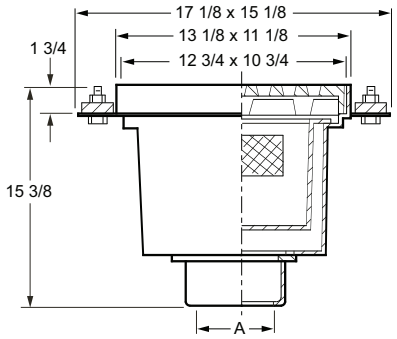

OUTLET VARIATIONS (Specify type of outlet and pipe size in inches.)

Outlet Type	Outlet Designation Outlet Type/Pipe Size	ADD
Inside Caulk	C03, C04, C05, C06	**N/C**
Threaded	T03, T04, T05, T06	**N/C**
No-Hub	Y03, Y04, Y05, Y06	**N/C**

OPTIONS:		ADD
-C	Flashing Clamp	**246.00**
-FBSCI	Flat Bottom Strainer, CI	**123.00**
-GG	Galvanized CI Grate	**1,189.00**
-M	Ductile Iron Grate	**788.00**
-SSB	SS Perforated Bucket	**282.00**

A OUTLET SIZE	TOP SIZE	FREE AREA SQ IN	†DUCO CI	DUCO CI PB TOP	DUCO CI NB TOP	APPROX. WEIGHT LBS
03, 04"	13 1/8 x 11 1/8"	40	**4,434.00**	**6,130.00**	**6,316.00**	100
05, 06"	13 1/8 x 11 1/8"	40	**4,434.00**	**6,130.00**	**6,316.00**	105

REGULARLY FURNISHED: Fabricated Steel Body with Galvanized Coating Inside and Outside and Cast Iron Grate and Stainless Steel Ported Bucket with Mesh Screen and Lift Bar.

FIG. 2455 TRAFFIC FLOOR DRAIN WITH LARGE CAPACITY SEDIMENT BUCKET

FUNCTION: Used in heavy traffic areas in industrial plants and boiler rooms. Suspended sediment bucket collects debris such as grit and other solids. Large top and deep body will handle large flow of water. Cast Iron Grate - Medium Duty. Ductile Iron Grate - Heavy Duty.

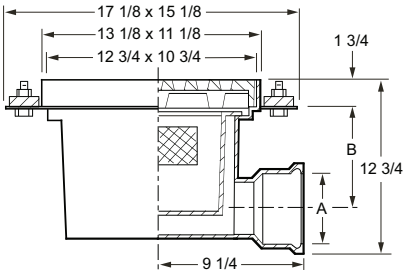

OUTLET VARIATIONS (Specify type of outlet and pipe size in inches.)

Outlet Type	Outlet Designation Outlet Type/Pipe Size	ADD
Inside Caulk	C03, C04, C05, C06	**N/C**
Threaded	T03, T04, T05, T06	**N/C**
No-Hub	Y03, Y04, Y05, Y06	**N/C**

OPTIONS:		ADD
-C	Flashing Clamp	**246.00**
-GG	Galvanized CI Grate	**1,189.00**
-M	Ductile Iron Grate	**788.00**
-SSB	SS Perforated Bucket	**282.00**

A OUTLET SIZE	TOP SIZE	FREE AREA SQ IN	B	†DUCO CI	DUCO CI PB TOP	DUCO CI NB TOP	APPROX. WEIGHT LBS
03"	13 1/8 x 11 1/8"	40	8 1/4"	**4,742.00**	**6,438.00**	**6,624.00**	105
04"	13 1/8 x 11 1/8"	40	7 3/4"	**4,742.00**	**6,438.00**	**6,624.00**	105
05"	13 1/8 x 11 1/8"	40	7 1/4"	**4,742.00**	**6,438.00**	**6,624.00**	110
06"	13 1/8 x 11 1/8"	40	6 3/4"	**4,742.00**	**6,438.00**	**6,624.00**	110

REGULARLY FURNISHED: Fabricated Steel Body with Galvanized Coating Inside and Outside and Cast Iron Grate and Stainless Steel Ported Bucket with Mesh Screen and Lift Bar.

FIG. 2470 MEDIUM DUTY TRAFFIC FLOOR DRAIN WITH OFFSET OUTLET, HINGED GRATE AND FREE STANDING SEDIMENT BUCKET

FUNCTION: Used in moderate traffic areas where hinged rectangular grate is required. Hinged top permits easy access for fast and frequent removal of sediment bucket.

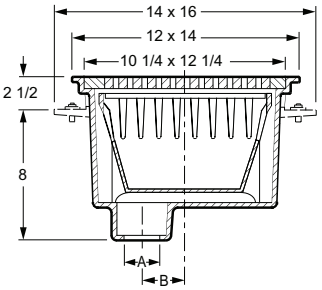

OUTLET VARIATIONS (Specify type of outlet and pipe size in inches.)

Outlet Type	Outlet Designation Outlet Type/Pipe Size	ADD
Inside Caulk	C02, C03, C04, C06	**N/C**
Threaded	T02, T03, T04, T06	**99.00**
No-Hub	Y02, Y03, Y04, Y06	**See Fig. 2646Y for list add to THREADED body price**

OPTIONS:		ADD
-AB	Aluminum Bucket	**485.00**
-FP	Frost Proof Bucket	**188.00**
-G	Galvanized CI	**1,184.00**
-M	Ductile Iron Grate	**788.00**
-U	Vandal Proof Screws	**188.00**

A OUTLET SIZE	TOP SIZE	FREE AREA SQ IN	†DUCO CI	DUCO CI PB TOP	DUCO CI NB TOP	APPROX. WEIGHT LBS
02, 03"	12 x 14"	47	**2,219.00**	**3,650.00**	**3,936.00**	69
04, 06"	12 x 14"	47	**2,219.00**	**3,650.00**	**3,936.00**	69

REGULARLY FURNISHED: Duco Cast Iron Body with Medium Duty Hinged Grate and Cast Iron Sediment Bucket.

†REGULARLY FURNISHED

FIG. 2473 MEDIUM DUTY TRAFFIC FLOOR DRAIN WITH OFFSET OUTLET, HINGED GRATE AND FREE STANDING SEDIMENT BUCKET

FUNCTION: Used in moderate traffic areas where hinged rectangular grate is required. Hinged top permits easy access for fast and frequent removal of sediment bucket.

2473
Same as 2470 with Flashing Flange

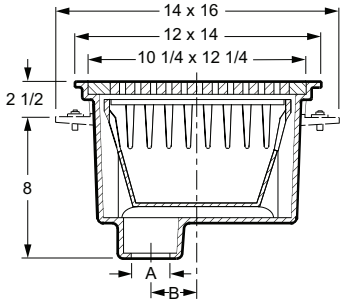

A OUTLET SIZE	TOP SIZE	FREE AREA SQ IN	B	†DUCO CI	DUCO CI PB TOP	DUCO CI NB TOP	APPROX. WEIGHT LBS
02"	12 x 14"	47	2 1/2"	**2,711.00**	**4,142.00**	**4,428.00**	69
03"	12 x 14"	47	2 1/2"	**2,711.00**	**4,142.00**	**4,428.00**	69
04"	12 x 14"	47	2"	**2,711.00**	**4,142.00**	**4,428.00**	69
06"	12 x 14"	47	1"	**2,711.00**	**4,142.00**	**4,428.00**	69

REGULARLY FURNISHED: Duco Cast Iron Body with Medium Duty Hinged Grate and Cast Iron Sediment Bucket.

OUTLET VARIATIONS (Specify type of outlet and pipe size in inches.)

Outlet Type	Outlet Designation Outlet Type/Pipe Size	ADD
Inside Caulk	C02, C03, C04, C06	**N/C**
Threaded	T02, T03, T04, T06	**99.00**
No-Hub	Y02, Y03, Y04, Y06	**See Fig. 2646Y for list add to THREADED body price**

OPTIONS:		ADD
-AB	Aluminum Bucket	**485.00**
-C	Flashing Clamp	**N/C**
-FP	Frost Proof Bucket	**188.00**
-G	Galvanized CI	**1,184.00**
-M	Ductile Iron Grate	**788.00**
-U	Vandal Proof Screws	**188.00**

FIG. 2475 MEDIUM DUTY TRAFFIC FLOOR DRAIN W/SIDE OUTLET, HINGED GRATE AND FREE STANDING SEDIMENT BUCKET

FUNCTION: Used in moderate traffic areas where hinged rectangular grate is required. Hinged top permits easy access for fast and frequent removal of sediment bucket.

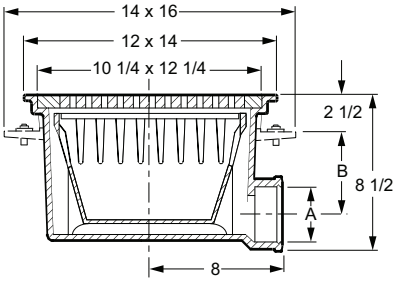

A OUTLET SIZE	TOP SIZE	FREE AREA SQ IN	B	†DUCO CI	DUCO CI PB TOP	DUCO CI NB TOP	APPROX. WEIGHT LBS
02"	12 x 14"	47	4"	**2,859.00**	**4,290.00**	**4,576.00**	69
03"	12 x 14"	47	3 1/2"	**2,859.00**	**4,290.00**	**4,576.00**	69
04"	12 x 14"	47	3"	**2,859.00**	**4,290.00**	**4,576.00**	69

REGULARLY FURNISHED: Duco Cast Iron Body with Medium Duty Hinged Grate and Cast Iron Sediment Bucket.

OUTLET VARIATIONS (Specify type of outlet and pipe size in inches.)

Outlet Type	Outlet Designation Outlet Type/Pipe Size	ADD
Inside Caulk	C02, C03, C04	**N/C**

OPTIONS:		ADD
-AB	Aluminum Bucket	**485.00**
-FP	Frost Proof Bucket	**188.00**
-G	Galvanized CI	**1,184.00**
-M	Ductile Iron Grate	**788.00**
-U	Vandal Proof Screws	**188.00**

FIG. 2478 MEDIUM DUTY TRAFFIC FLOOR DRAIN W/SIDE OUTLET, HINGED GRATE AND FREE STANDING SEDIMENT BUCKET

FUNCTION: Used in moderate traffic areas where hinged rectangular grate is required. Hinged top permits easy access for fast and frequent removal of sediment bucket.

2478
Same as 2475 with Flashing Flange

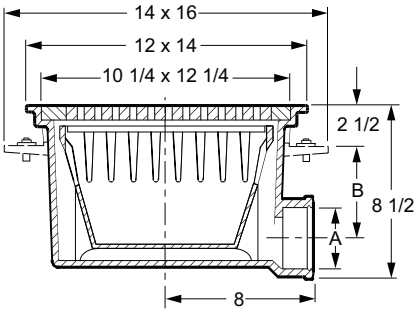

A OUTLET SIZE	TOP SIZE	FREE AREA SQ IN	B	†DUCO CI	DUCO CI PB TOP	DUCO CI NB TOP	APPROX. WEIGHT LBS
02"	12 x 14"	47	4"	**3,351.00**	**4,782.00**	**5,068.00**	95
03"	12 x 14"	47	3 1/2"	**3,351.00**	**4,782.00**	**5,068.00**	95
04"	12 x 14"	47	3"	**3,351.00**	**4,782.00**	**5,068.00**	95

REGULARLY FURNISHED: Duco Cast Iron Body with Medium Duty Hinged Grate and Cast Iron Sediment Bucket.

OUTLET VARIATIONS (Specify type of outlet and pipe size in inches.)

Outlet Type	Outlet Designation Outlet Type/Pipe Size	ADD
Inside Caulk	C02, C03, C04	**N/C**

OPTIONS:		ADD
-AB	Aluminum Bucket	**485.00**
-C	Flashing Clamp	**N/C**
-FP	Frost Proof Bucket	**188.00**
-G	Galvanized CI	**1,184.00**
-M	Ductile Iron Grate	**788.00**
-U	Vandal Proof Screws	**188.00**

†REGULARLY FURNISHED

FIG. 2484 WHITFORD STYLE HEAVY DUTY INDUSTRIAL DRAIN

FUNCTION: Used in packing houses and industrial plants where large quantities of water must be drained and heavy traffic is anticipated. Debris and solids are retained in a suspended bucket which is readily and easily emptied.

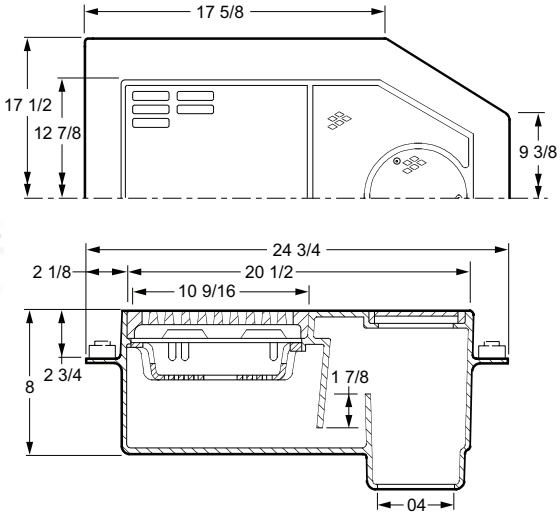

OUTLET VARIATIONS (Specify type of outlet and pipe size in inches.)

Outlet Type	Outlet Designation Outlet Type/Pipe Size	ADD
Inside Caulk	C04	N/C

OPTIONS:		ADD
-C	Flashing Clamp	508.00
-CIB	Cast Iron Bucket	N/C
-G	Galvanized CI	2,054.00
-M	Ductile Iron Grate	788.00
-U	Vandal Proof Screws	188.00
-W	With Seepage Holes	191.00

OUTLET SIZE	TOP SIZE	FREE AREA SQ IN	†DUCO CI	APPROX. WEIGHT LBS
04"	13 1/2 x 20 1/2"	38.5	**4,555.00**	110

REGULARLY FURNISHED:

Fabricated Steel Body with Acid Resistant Coating Inside and Outside with Heavy Duty Cast Iron Tractor Grate, Aluminum Sediment Bucket, and Secured Heavy Duty Cleanout Cover.

FIG. 2488 HEAVY DUTY TRAFFIC PACKING HOUSE FLOOR DRAIN

FUNCTION: Used in packing houses and industrial plants where large quantities of water must be drained and heavy traffic is anticipated. Adjustable top conveniently adapts to different floor thicknesses. Top has four step adjustments in 1/2" increments. Large suspended sediment bucket is essential in packing house applications where considerable debris is anticipated.

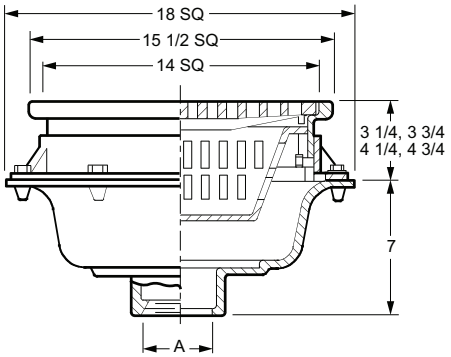

OUTLET VARIATIONS (Specify type of outlet and pipe size in inches.)

Outlet Type	Outlet Designation Outlet Type/Pipe Size	ADD
Inside Caulk	C03, C04	N/C
Threaded	T03, T04	99.00
No-Hub	Y03, Y04, Y05, Y06	N/C

OPTIONS:		ADD
-AB	Aluminum Bucket	485.00
-ARI	ARC Inside	2,061.00
-ARIO	ARC In and Out	2,294.00
-E	Adj Ext, 5 to 6 1/2"	1,852.00
-FBSCI	Flat Bottom Strainer	123.00
-G	Galvanized CI	2,177.00
-U	Vandal Proof Screws	188.00
		DEDUCT
-LB	Less Bucket	237.00

A OUTLET SIZE	TOP SIZE	FREE AREA SQ IN	†DUCO CI DI TOP	DUCO CI PB TOP	DUCO CI NB TOP	APPROX. WEIGHT LBS
03, 04"	15 1/2"	63	**4,033.00**	**5,675.00**	**5,760.00**	105
05, 06"	15 1/2"	63	**4,033.00**	**5,675.00**	**5,760.00**	109

REGULARLY FURNISHED: Duco Cast Iron Body, Flashing Collar and Adjustable Top with Ductile Iron Grate and Cast Iron Sediment Bucket.

†REGULARLY FURNISHED

FIG. 2490 HEAVY DUTY FLOOR DRAIN WITH 8 1/2" ROUND TOP AND TRACTOR GRATE

FUNCTION: Used in moderate traffic areas such as equipment and storage rooms. Deep drain body has provisions for side auxiliary inlet which can be used to receive the waste from other fixtures or drains.

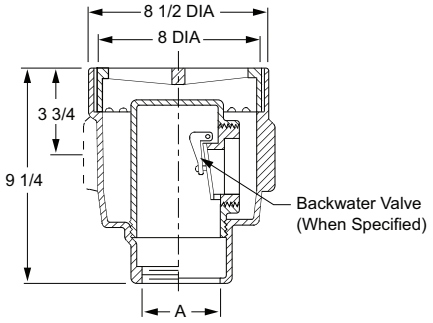

A OUTLET SIZE	TOP SIZE	FREE AREA SQ IN	†DUCO CI	DUCO CI PB TOP	DUCO CI NB TOP	APPROX. WEIGHT LBS
02, 03, 04"	8 1/2"	13	**1,562.00**	**2,145.00**	**2,255.00**	32

REGULARLY FURNISHED: Duco Cast Iron Body and Tractor Grate.

OUTLET VARIATIONS (Specify type of outlet and pipe size in inches.)

Outlet Type	Outlet Designation Outlet Type/Pipe Size	ADD
Inside Caulk	C02, C03, C04	**N/C**
Threaded	T03, T04	**99.00**
No-Hub	Y03, Y04	**See Fig. 2646Y for list add to THREADED body price**

OPTIONS:		ADD
-B	Standing Slotted Bucket	**246.00**
-DBSCI	Dome Bottom Strainer, CI	**308.00**
-E	Extension, ea 2" or fract.	**246.00**
-FBSCI	Flat Bottom Strainer, CI	**76.00**
-G	Galvanized CI	**718.00**
-H	Hinged Bar Grate	**327.00**
	Hub Adaptor f/Aux Inlet **See Fig. 2645 for list add to THRD body price**	
-M	Ductile Iron Grate	**274.00**
-N2	2" NPT Aux Inlet, ea	**442.00**
-N15	1 1/2" NPT Aux Inlet, ea	**442.00**
-S	Square CI Top	**414.00**
-SB	Standing Solid Bucket	**246.00**
-SC	Solid Scoriated Cover	**621.00**
-SNB	Square NB Top, add to CI	**1,205.00**
-SPB	Square PB Top, add to CI	**998.00**
-TP	"T" Handle Closure Plug	
	02, 03"	**507.00**
	04"	**847.00**
-U	Vandal Proof Grate	**188.00**
-V	Backwater Valve Assembly	**788.00**

FIG. 2495 HEAVY DUTY FLOOR DRAIN WITH 8 1/2" ROUND TOP, FLASHING FLANGE AND TRACTOR GRATE

FUNCTION: Used in moderate traffic areas such as equipment and storage rooms. Deep drain body has provisions for side auxiliary inlet which can be used to receive the waste from other fixtures or drains.

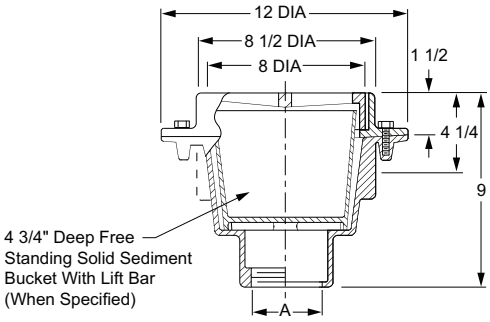

A OUTLET SIZE	TOP SIZE	FREE AREA SQ IN	†DUCO CI	DUCO CI PB TOP	DUCO CI NB TOP	APPROX. WEIGHT LBS
02, 03, 04"	8 1/2"	13	**1,745.00**	**2,328.00**	**2,460.00**	40

REGULARLY FURNISHED: Duco Cast Iron Body with Flashing Flange and Tractor Grate.

OUTLET VARIATIONS (Specify type of outlet and pipe size in inches.)

Outlet Type	Outlet Designation Outlet Type/Pipe Size	ADD
Inside Caulk	C02, C03, C04	**N/C**
Threaded	T02, T03, T04	**99.00**
No-Hub	Y02, Y03, Y04	**See Fig. 2646Y for list add to THREADED body price**

OPTIONS:		ADD
-B	Standing Slotted Bucket	**246.00**
-DBSCI	Dome Bottom Strainer, CI	**308.00**
-E	Extension, ea 2" or fract.	**246.00**
-FBSCI	Flat Bottom Strainer	**76.00**
-G	Galvanized CI	**718.00**
-H	Hinged Bar Grate	**327.00**
	Hub Adaptor f/Aux Inlet **See Fig. 2645 for list add to THRD body price**	
-M	Ductile Iron Grate	**274.00**
-N2	2" NPT Aux Inlet, ea	**442.00**
-N15	1 1/2" NPT Aux Inlet, ea	**442.00**
-S	Square Top (Add for CI only. For NB or PB, see below)	**414.00**
-SB	Standing Solid Bucket	**246.00**
-SNB	Square NB Top, add to CI	**1,205.00**
-SPB	Square PB Top, add to CI	**998.00**
-TP	"T" Handle Closure Plug	
	02, 03"	**507.00**
	04"	**847.00**
-U	Vandal Proof Grate	**188.00**
-V	Backwater Valve Assembly	**788.00**

†REGULARLY FURNISHED

FIG. 2500 FLUSHING TYPE LABORATORY AND INSTITUTIONAL DRAIN WITH 11 1/2" TOP AND HINGED PERFORATED GRATE - LIGHT DUTY/PEDESTRIAN TRAFFIC ONLY

LOAD RATING: Light duty load rating per ASME A112.6.3 Floor and Trench Drain Standard, Classification and Test Procedures for Grate Loading. All grates selections shall be based on the loading factor, anticipated traffic, drain location and other pertinent factors for the application. Loading classifications are static loads only and categorized into five classifications each having a given range. For the specific safe live static load rating of any grate, contact the Smith representative or factory direct. Pedestrian Traffic Only.

Light Duty is defined as having a Safe Live Static Load less than 2000 lbs.

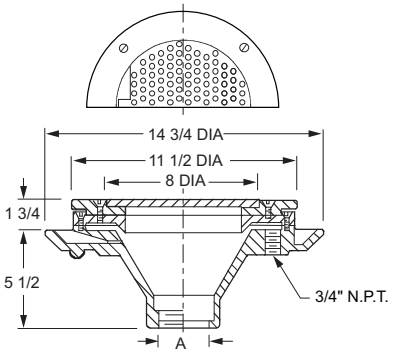

A OUTLET SIZE	TOP SIZE	FREE AREA SQ IN	DUCO CI ARC IN PB TOP	DUCO CI ARC IN †NB TOP	APPROX. WEIGHT LBS
02, 03, 04"	11 1/2"	10	**3,047.00**	**3,293.00**	20

OUTLET VARIATIONS (Specify type of outlet and pipe size in inches.)

Outlet Type	Outlet Designation Outlet Type/Pipe Size	ADD
Inside Caulk	C02, C03, C04	**N/C**
Threaded	T02, T03, T04	**99.00**
No-Hub	Y02, Y03, Y04	**See Fig. 2646Y for list add to THREADED body price**

OPTIONS:		ADD
-C	Flashing Clamp	**246.00**
-SSB	Stainless Steel Bucket	**327.00**

REGULARLY FURNISHED: Duco Cast Iron Body and Flange with Acid Resistant Coated Interior and Nickel Bronze Top with Vandal Proof Screws.

FIG. 2501 FLUSHING TYPE LABORATORY AND INSTITUTIONAL DRAIN WITH 11 1/2" TOP AND LOOSE SET WIDE BAR GRATE - LIGHT DUTY/PEDESTRIAN TRAFFIC ONLY

LOAD RATING: Light duty load rating per ASME A112.6.3 Floor and Trench Drain Standard, Classification and Test Procedures for Grate Loading. All grates selections shall be based on the loading factor, anticipated traffic, drain location and other pertinent factors for the application. Loading classifications are static loads only and categorized into five classifications each having a given range. For the specific safe live static load rating of any grate, contact the Smith representative or factory direct. Pedestrian Traffic Only.

Light Duty is defined as having a Safe Live Static Load less than 2000 lbs.

2501 Same as 2500 w/Loose Set Wide Bar Grate

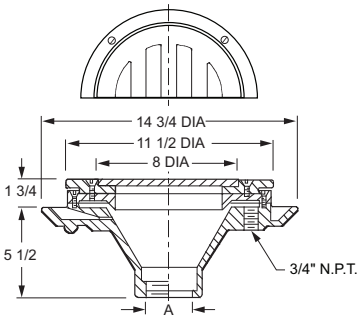

A OUTLET SIZE	TOP SIZE	FREE AREA SQ IN	DUCO CI ARC IN PB TOP	DUCO CI ARC IN †NB TOP	APPROX. WEIGHT LBS
02, 03, 04"	11 1/2"	18	**3,417.00**	**3,663.00**	20

OUTLET VARIATIONS (Specify type of outlet and pipe size in inches.)

Outlet Type	Outlet Designation Outlet Type/Pipe Size	ADD
Inside Caulk	C02, C03, C04	**N/C**
Threaded	T02, T03, T04	**99.00**
No-Hub	Y02, Y03, Y04	**See Fig. 2646Y for list add to THREADED body price**

OPTIONS:		ADD
-C	Flashing Clamp	**246.00**
-H	Hinged Wide Bar Grate	**191.00**
-SEC	Secured Grate	**246.00**
-SSB	Stainless Steel Bucket	**327.00**

REGULARLY FURNISHED: Duco Cast Iron Body and Flange with Acid Resistant Coated Interior and Nickel Bronze Top with Vandal Proof Screws.

FIG. 2502 FLUSHING TYPE LABORATORY AND INSTITUTIONAL DRAIN WITH 11 1/2" TOP AND INTEGRAL GRATE AND RIM - LIGHT DUTY/PEDESTRIAN TRAFFIC ONLY

LOAD RATING: Light duty load rating per ASME A112.6.3 Floor and Trench Drain Standard, Classification and Test Procedures for Grate Loading. All grates selections shall be based on the loading factor, anticipated traffic, drain location and other pertinent factors for the application. Loading classifications are static loads only and categorized into five classifications each having a given range. For the specific safe live static load rating of any grate, contact the Smith representative or factory direct. Pedestrian Traffic Only.

Light Duty is defined as having a Safe Live Static Load less than 2000 lbs.

2502 Same as 2500 with Integral Grate and Rim

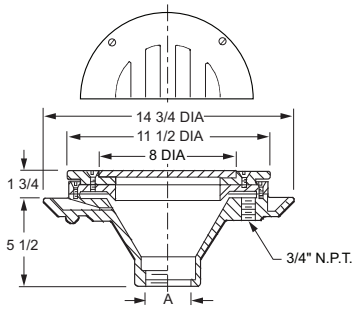

A OUTLET SIZE	TOP SIZE	FREE AREA SQ IN	DUCO CI ARC IN PB TOP	DUCO CI ARC IN †NB TOP	APPROX. WEIGHT LBS
02, 03, 04"	11 1/2"	17 1/2	**3,181.00**	**3,427.00**	20

OUTLET VARIATIONS (Specify type of outlet and pipe size in inches.)

Outlet Type	Outlet Designation Outlet Type/Pipe Size	ADD
Inside Caulk	C02, C03, C04	**N/C**
Threaded	T02, T03, T04	**99.00**
No-Hub	Y02, Y03, Y04	**See Fig. 2646Y for list add to THREADED body price**

OPTIONS:		ADD
-C	Flashing Clamp	**246.00**
-SSB	Stainless Steel Bucket	**327.00**

REGULARLY FURNISHED: Duco Cast Iron Body and Flange with Acid Resistant Coated Interior and Nickel Bronze Top with Vandal Proof Screws.

†REGULARLY FURNISHED

FIG. 2505 FLUSHING TYPE LABORATORY AND INSTITUTIONAL DRAIN WITH 11 1/2" TOP AND HINGED PERFORATED GRATE - LIGHT DUTY/PEDESTRIAN TRAFFIC ONLY

LOAD RATING: Light duty load rating per ASME A112.6.3 Floor and Trench Drain Standard, Classification and Test Procedures for Grate Loading. All grates selections shall be based on the loading factor, anticipated traffic, drain location and other pertinent factors for the application. Loading classifications are static loads only and categorized into five classifications each having a given range. For the specific safe live static load rating of any grate, contact the Smith representative or factory direct. Pedestrian Traffic Only.

Light Duty is defined as having a Safe Live Static Load less than 2000 lbs.

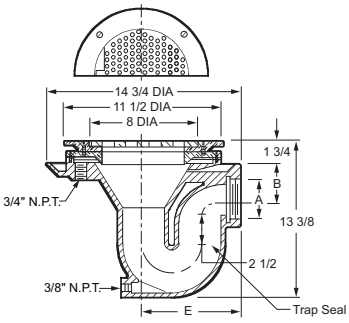

REGULARLY FURNISHED: Duco Cast Iron Body and Flange with Acid Resistant Coated Interior and Nickel Bronze Top with Vandal Proof Screws.

OUTLET VARIATIONS (Specify type of outlet and pipe size in inches.)

Outlet Type	Outlet Designation Outlet Type/Pipe Size	ADD
Threaded	T02, T03, T04	N/C
No-Hub	Y02, Y03, Y04	See Fig. 2646Y for list add to THREADED body

OPTIONS:

		ADD
-C	Flashing Clamp	246.00
-SSB	Stainless Steel Bucket	327.00

A OUTLET SIZE	TOP SIZE	FREE AREA SQ IN	B	E	DUCO CI ARC IN PB TOP	DUCO CI ARC IN †NB TOP	APPROX. WEIGHT LBS
02"	11 1/2"	10	3 5/8"	10 1/2"	**2,965.00**	**3,211.00**	50
03"	11 1/2"	10	3 1/8"	10 1/2"	**3,079.00**	**3,325.00**	50
04"	11 1/2"	10	2 15/16"	9 1/2"	**3,079.00**	**3,325.00**	50

FIG. 2506 FLUSHING TYPE LABORATORY AND INSTITUTIONAL DRAIN WITH 11 1/2" TOP AND LOOSE SET WIDE BAR GRATE - LIGHT DUTY/PEDESTRIAN TRAFFIC ONLY

LOAD RATING: Light duty load rating per ASME A112.6.3 Floor and Trench Drain Standard, Classification and Test Procedures for Grate Loading. All grates selections shall be based on the loading factor, anticipated traffic, drain location and other pertinent factors for the application. Loading classifications are static loads only and categorized into five classifications each having a given range. For the specific safe live static load rating of any grate, contact the Smith representative or factory direct. Pedestrian Traffic Only.

Light Duty is defined as having a Safe Live Static Load less than 2000 lbs.

2506 Same as 2501 w/Loose Set Wide Bar Grate

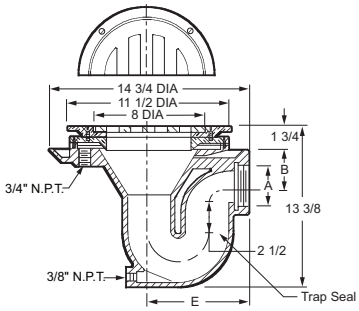

REGULARLY FURNISHED: Duco Cast Iron Body and Flange with Acid Resistant Coated Interior and Nickel Bronze Top with Vandal Proof Screws.

OUTLET VARIATIONS (Specify type of outlet and pipe size in inches.)

Outlet Type	Outlet Designation Outlet Type/Pipe Size	ADD
Threaded	T02, T03, T04	N/C
No-Hub	Y02, Y03, Y04	See Fig. 2646Y for list add to THREADED body

OPTIONS:

		ADD
-C	Flashing Clamp	246.00
-H	Hinged Wide Bar Grate	191.00
-SSB	Stainless Steel Bucket	327.00

A OUTLET SIZE	TOP SIZE	FREE AREA SQ IN	B	E	DUCO CI ARC IN PB TOP	DUCO CI ARC IN †NB TOP	APPROX. WEIGHT LBS
02"	11 1/2"	18	3 5/8"	10 1/2"	**3,343.00**	**3,589.00**	50
03"	11 1/2"	18	3 1/8"	10 1/2"	**3,454.00**	**3,700.00**	50
04"	11 1/2"	18	2 15/16"	9 1/2"	**3,454.00**	**3,700.00**	50

FIG. 2507 FLUSHING TYPE LABORATORY AND INSTITUTIONAL DRAIN WITH 11 1/2" TOP AND INTEGRAL GRATE AND RIM - LIGHT DUTY/PEDESTRIAN TRAFFIC ONLY

LOAD RATING: Light duty load rating per ASME A112.6.3 Floor and Trench Drain Standard, Classification and Test Procedures for Grate Loading. All grates selections shall be based on the loading factor, anticipated traffic, drain location and other pertinent factors for the application. Loading classifications are static loads only and categorized into five classifications each having a given range. For the specific safe live static load rating of any grate, contact the Smith representative or factory direct. Pedestrian Traffic Only.

Light Duty is defined as having a Safe Live Static Load less than 2000 lbs.

2507 Same as 2505 with Integral Grate and Rim

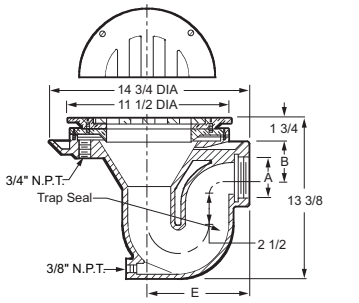

REGULARLY FURNISHED: Duco Cast Iron Body and Flange with Acid Resistant Coated Interior and Nickel Bronze Top with Vandal Proof Screws.

OUTLET VARIATIONS (Specify type of outlet and pipe size in inches.)

Outlet Type	Outlet Designation Outlet Type/Pipe Size	ADD
Threaded	T02, T03, T04	N/C
No-Hub	Y02, Y03, Y04	See Fig. 2646Y for list add to THREADED body

OPTIONS:

		ADD
-C	Flashing Clamp	246.00
-SSB	Stainless Steel Bucket	327.00

A OUTLET SIZE	TOP SIZE	FREE AREA SQ IN	B	E	DUCO CI ARC IN PB TOP	DUCO CI ARC IN †NB TOP	APPROX. WEIGHT LBS
02"	11 1/2"	17.5	3 5/8"	10 1/2"	**3,103.00**	**3,349.00**	50
03"	11 1/2"	17.5	3 1/8"	10 1/2"	**3,215.00**	**3,461.00**	50
04"	11 1/2"	17.5	2 15/16"	9 1/2"	**3,215.00**	**3,461.00**	50

†REGULARLY FURNISHED

FIG. 2508 LABORATORY AND ANIMAL DEN FLOOR DRAIN WITH SECURED GRATE

FUNCTION: Used in biology laboratories and animal dens. Large grate openings permit animal wastes and other solids to be washed into drain. The acid resistant coated interior and flushing feature serve to maintain a sanitary condition. Light Duty

Load Rating: Light Duty having a Safe Live (Static) Load less than 2,000 lbs. (900 kg) per ASME A112.6.3 Floor Drain Standard.
For the specific Safe Live Load rating of any grate, contact the Smith representative or factory direct.

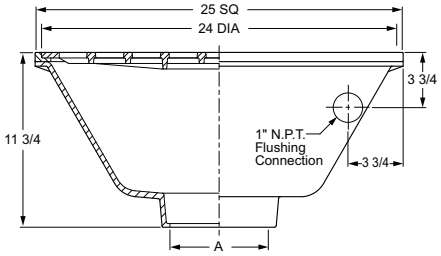

OUTLET VARIATIONS (Specify type of outlet and pipe size in inches.)

Outlet Type	Outlet Designation Outlet Type/Pipe Size	ADD
Inside Caulk	C04, C06, C08	N/C
No-Hub	Y04, Y06	See Fig. 2646Y for list add to THREADED body

OPTIONS:		ADD
-B	Sediment Bucket	1,489.00
-G	Galvanized CI	2,060.00
-SC	Solid Scoriated Cover	22,959.00
-U	Vandal Proof Grate	264.00

A OUTLET SIZE	TOP SIZE	FREE AREA SQ IN	DUCO CI ARC IN PB TOP	DUCO CI ARC IN †NB TOP	APPROX. WEIGHT LBS
04, 06"	25" SQ.	205	**15,988.00**	**20,794.00**	118

REGULARLY FURNISHED: Duco Cast Iron Body with Acid Resistant Coated Interior, Nickel Bronze Top with Secured Grate.

FIG. 2510 INTEGRAL TRAP AND FLOOR-LEVEL CLEANOUT DRAIN

FUNCTION: Used in moderate traffic areas where deep trap seal, floor level cleanout and shallow side outlet rough-in are required where limited space is available. Drain includes these features in one compact casting. Light Duty

Load Rating: Light Duty having a Safe Live (Static) Load less than 2,000 lbs. (900 kg) per ASME A112.6.3 Floor Drain Standard.
For the specific Safe Live Load rating of any grate, contact the Smith representative or factory direct.

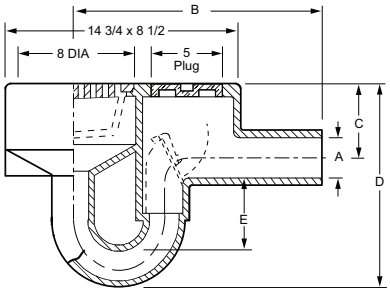

OUTLET VARIATIONS (Specify type of outlet and pipe size in inches.)

Outlet Type	Outlet Designation Outlet Type/Pipe Size	ADD
Spigot	S02, S03, S04	N/C

OPTIONS:		ADD
-B	Safe Set Sediment Bucket, CI	158.00
-D	Dome Grate, CI	104.00
-DNB	Dome Grate, add to CI	1,456.00
-DPB	Dome Grate, add to CI	1,270.00
-G	Galvanized CI	966.00
-H	Hinged Grate	327.00
	Hub Adaptor f/Aux Inlet See Fig. 2645 for list add to THRD body price	
-MBG	Ductile Iron Bucket & Grate	640.00
-N2	2" NPT Aux Inlet, ea	442.00
	2" Hub or Spigot Inlet, ea	607.00
-N15	1 1/2" NPT Aux Inlet, ea	442.00
-P	Trap Primer Conn	210.00
-U	Vandal Proof Grate	188.00
-V	Backwater Valve, 02"	767.00
	03"	849.00
	04"	924.00

A OUTLET SIZE	TOP SIZE	FREE AREA SQ IN	B	C	D	E SEAL	DUCO CI †DUCO CI	DUCO CI PB TOP	NB TOP	APPROX. WEIGHT LBS
02"	15 x 8"	14.24	16"	4 1/4"	11 3/4"	4"	**1,612.00**	**2,513.00**	**2,595.00**	40
03"	15 x 8"	14.24	15 3/4"	4"	13 1/2"	4 1/2"	**2,538.00**	**3,439.00**	**3,521.00**	52
04"	15 x 8"	14.24	16"	4 1/2"	15 3/4"	4 3/4"	**2,664.00**	**3,565.00**	**3,647.00**	72

REGULARLY FURNISHED: Duco Cast Iron Body and Grate with Bronze Cleanout Plug.

†REGULARLY FURNISHED

FIG. 2515 INTEGRAL TRAP AND FLOOR-LEVEL CLEANOUT DRAIN

FUNCTION: Used in moderate traffic areas where deep trap seal, floor level cleanout and shallow side outlet rough-in are required where limited space is available. Drain includes these features in one compact casting. Light Duty

Load Rating: Light Duty having a Safe Live (Static) Load less than 2,000 lbs. (900 kg) per ASME A112.6.3 Floor Drain Standard.
For the specific Safe Live Load rating of any grate, contact the Smith representative or factory direct.

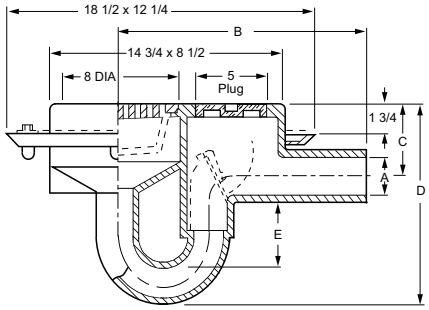

OUTLET VARIATIONS (Specify type of outlet and pipe size in inches.)

Outlet Type	Outlet Designation Outlet Type/Pipe Size	ADD
Spigot	S02, S03, S04	N/C

OPTIONS:		ADD
-B	Safe Set Sediment Bucket	158.00
-C	Flashing Clamp	293.00
-D	Dome Grate, CI	104.00
-DNB	Dome Grate, add to CI	1,456.00
-DPB	Dome Grate, add to CI	1,270.00
-H	Hinged Grate	327.00
	Hub Adaptor f/Aux Inlet **See Fig. 2645 for list add to THRD body price**	
-G	Galvanized CI	966.00
-MBG	Ductile Iron Bucket & Grate	640.00
-N2	2" NPT Aux Inlet, ea	442.00
	2" Hub or Spigot Inlet, ea	607.00
-N15	1 1/2" NPT Aux Inlet, ea	442.00
-P	Trap Primer Conn	210.00
-U	Vandal Proof Grate	188.00
-V	Backwater Valve, 02"	767.00
	03"	849.00
	04"	924.00

A OUTLET SIZE	TOP SIZE	FREE AREA SQ IN	B	C	D	E SEAL	†DUCO CI	DUCO CI PB TOP	DUCO CI NB TOP	APPROX. WEIGHT LBS
02"	15 x 8"	14.24	16"	4 1/4"	11 3/4"	4"	**1,612.00**	**2,513.00**	**2,595.00**	40
03"	15 x 8"	14.24	15 3/4"	4"	13 1/2"	4 1/2"	**2,538.00**	**3,439.00**	**3,521.00**	52
04"	15 x 8"	14.24	16"	4 1/2"	15 3/4"	4 3/4"	**2,664.00**	**3,565.00**	**3,647.00**	72

REGULARLY FURNISHED: Duco Cast Iron Body and Grate with Bronze Cleanout Plug.

FIG. 2530 BALL FLOAT BACKWATER VALVE

FUNCTION: Light duty general purpose trap drain with backwater valve protection and integral cleanout. Drain has shallow roughing side spigot outlet for use in lower areas where rough-in height is limited.

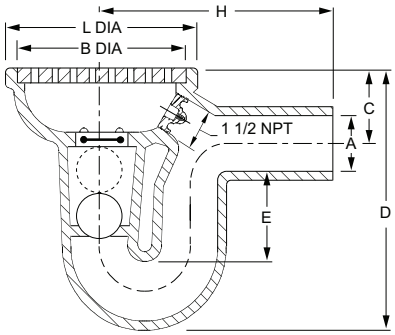

OUTLET VARIATIONS (Specify type of outlet and pipe size in inches.)

Outlet Type	Outlet Designation Outlet Type/Pipe Size	ADD
Spigot	S02, S03, S04	N/C

OPTIONS:		ADD
-G	Galvanized CI	625.00
-SEC	Secured Grate	188.00
-U	Vandal Proof Grate	188.00

		DEDUCT
-LBWV	Less Backwater Valve	
	02"	123.00
	03, 04"	246.00

A OUTLET SIZE	TOP SIZE	FREE AREA SQ IN	B DIA	C	D	E SEAL	H	L DIA	†DUCO CI	DUCO CI PB TOP	DUCO CI NB TOP	APPROX. WEIGHT LBS
02"	8 1/4"	12	7 1/2"	3 1/4"	11"	4 1/2	10 1/2"	8 1/4"	**1,083.00**	**1,568.00**	**1,614.00**	40
03"	10"	19.5	9 1/4"	4"	13 1/4"	4 1/2	12"	10"	**1,489.00**	**1,974.00**	**2,020.00**	52
04"	12 1/2"	28.5	11 1/2"	4 1/2"	15"	4	15 1/4"	12 1/2"	**2,091.00**	**3,219.00**	**3,339.00**	72

REGULARLY FURNISHED: Duco Cast Iron Body and Bar Grate with Ball Float Backwater Valve and Bronze Cleanout Plug.

†REGULARLY FURNISHED

FIG. DX2565 FLOOR DRAIN WITH WIDE FLANGE BODY AND "SAFE-SET" BUCKET

FUNCTION: Used in light duty areas where waste water contains solids or debris that must be prevented from entering drainage system. Wide flange allows adhesion of waterproof traffic deck covering, insuring watertight integrity. "Safe-Set" design insures bucket replacement after cleaning. Light Duty.

Load Rating: Light Duty having a Safe Live (Static) Load less than 2,000 lbs. (900 kg) per ASME A112.6.3 Floor Drain Standard.
For the specific Safe Live Load rating of any grate, contact the Smith representative or factory direct.

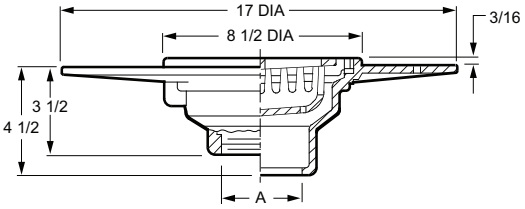

A OUTLET SIZE	TOP SIZE	FREE AREA SQ IN	†DUCO CI	DUCO CI PB TOP	DUCO CI NB TOP	APPROX. WEIGHT LBS
02, 03, 04"	8 1/2"	9.25	**1,794.00**	**2,357.00**	**2,487.00**	30

REGULARLY FURNISHED: Duco Cast Iron 4" Wide Flange Body with Bucket and Grate.

OUTLET VARIATIONS (Specify type of outlet and pipe size in inches.)

Outlet Type	Outlet Designation Outlet Type/Pipe Size	ADD
Inside Caulk	C02, C03, C04	**N/C**
Speedi-Seal Gasket*	02, 03, 04	**73.00**
Threaded	T02, T03, T04	**99.00**
No-Hub	Y02, Y03, Y04	**See Fig. 2646Y for list add to THREADED body price**

OPTIONS:		ADD
-C	Underdeck Clamp	**293.00**
-G	Galvanized CI	**876.00**
-R	Membrane Clamp	**N/C**
-SH	Securing Holes	**156.00**
-U	Vandal Proof Screws	**188.00**

*Speedi-Seal Gasket Available for use with 2, 3, or 4" Caulk Outlet Bodies as Indicated. Specify Service Weight (SW) or Extra Heavy (XH).

FIG. DX2566 FLOOR DRAIN WITH WIDE FLANGE BODY AND "SAFE-SET" BUCKET

FUNCTION: Used in high flow areas where waste water contains solids or debris that must be prevented from entering drainage system. Wide flange allows adhesion of waterproof traffic deck covering, insuring watertight integrity. "Safe-Set" design insures bucket replacement after cleaning. Light Duty.

Load Rating: Light Duty having a Safe Live (Static) Load less than 2,000 lbs. (900 kg) per ASME A112.6.3 Floor Drain Standard.
For the specific Safe Live Load rating of any grate, contact the Smith representative or factory direct.

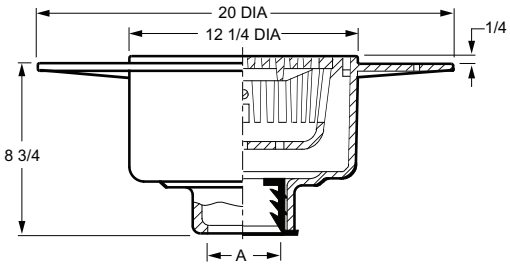

A OUTLET SIZE	TOP SIZE	FREE AREA SQ IN	†DUCO CI	DUCO CI PB TOP	DUCO CI NB TOP	APPROX. WEIGHT LBS
02, 03, 04"	12 1/4"	25.25	**2,592.00**	**3,426.00**	**3,558.00**	68
05, 06"	12 1/4"	25.25	**2,592.00**	**3,426.00**	**3,558.00**	68

REGULARLY FURNISHED: Duco Cast Iron 4" Wide Flange Body with Bucket and Grate.

OUTLET VARIATIONS (Specify type of outlet and pipe size in inches.)

Outlet Type	Outlet Designation Outlet Type/Pipe Size	ADD
Inside Caulk	C02, C03, C04, C05, C06	**N/C**
Threaded	T02, T03, T04	**99.00**
Speedi-Seal Gasket*	02, 03, 04	**73.00**
No-Hub	Y02, Y03, Y04, Y05, Y06	**See Fig. 2646Y for list add to THREADED body price**

OPTIONS:		ADD
-C	Underdeck Clamp	**310.00**
-G	Galvanized CI	**1,229.00**
-M	Ductile Iron Grate	**335.00**
-R	Membrane Clamp	**N/C**
-SH	Securing Holes	**156.00**
-U	Vandal Proof Screws	**188.00**

*Speedi-Seal Gasket Available for use with 2, 3, or 4" Caulk Outlet Bodies as Indicated. Specify Service Weight (SW) or Extra Heavy (XH).

FIG. DX2568 SQUARE FLANGE FLOOR DRAIN WITH TRACTOR GRATE FOR WOOD DECK OR CONCRETE CONSTRUCTION

FUNCTION: Used on promenade roof decks and roof recreational areas where waterproof traffic deck covering is to be installed. Wide flange allows adhesion of waterproof traffic deck covering, insuring watertight integrity, for particular use with wood deck construction.

Load Rating - Contact Factory

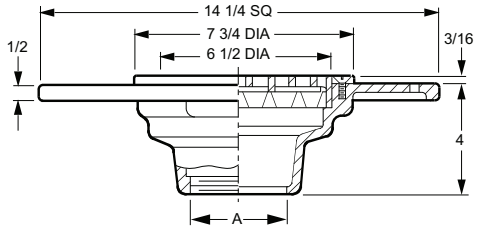

A OUTLET SIZE	TOP SIZE	FREE AREA SQ IN	DUCO CI PB TOP	DUCO CI †NB TOP	APPROX. WEIGHT LBS
02, 03, 04"	7 3/4"	12.5	**1,495.00**	**1,788.00**	31

REGULARLY FURNISHED: Duco Cast Iron Body with Nickel Bronze Tractor Grate and Rim.

OUTLET VARIATIONS (Specify type of outlet and pipe size in inches.)

Outlet Type	Outlet Designation Outlet Type/Pipe Size	ADD
Inside Caulk	C02, C03, C04	**N/C**
Threaded	T02, T03, T04	**99.00**
No-Hub	Y02, Y03, Y04	**See Fig. 2646Y for list add to THREADED body price**

OPTIONS:		ADD
-B	Sediment Bucket	**158.00**
-C	Underdeck Clamp	**293.00**
-G	Galvanized CI	**876.00**
-U	Vandal Proof Screws	**188.00**

†REGULARLY FURNISHED

FIG. 2570 HEAVY DUTY ROADWAY DRAIN

FUNCTION: Used in roadways, parking and trucking areas to handle both heavy traffic loads and a large volume of surface water. Internal dome strainer protects the waste system from entrance of debris.

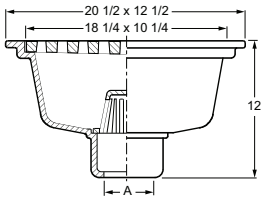

A OUTLET SIZE	TOP SIZE	FREE AREA SQ IN	†DUCO CI	APPROX. WEIGHT LBS
03, 04"	20 1/2 x 12 1/2"	47	**7,885.00**	162
05, 06"	20 1/2 x 12 1/2"	47	**7,885.00**	162

REGULARLY FURNISHED: Duco Cast Iron Body with Loose Set Grate and Dome Bottom Strainer.

OUTLET VARIATIONS (Specify type of outlet and pipe size in inches.)

Outlet Type	Outlet Designation Outlet Type/Pipe Size	ADD
Inside Caulk	C03, C04, C05, C06	**N/C**

OPTIONS:		ADD
-B	Sediment Bucket	**556.00**
-G	Galvanized CI	**4,234.00**
-M	Ductile Iron Grate	**2,538.00**
-U	Vandal Proof Screws	**308.00**

FIG. 2585 GUTTER DRAIN WITH SECURED GRATE

FUNCTION: Used in gutters and trenches where only a limited width is available for drainage. Long rectangular grate with large free area is capable of handling large amounts of water.

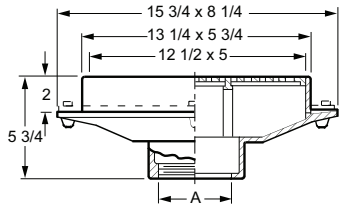

A OUTLET SIZE	TOP SIZE	FREE AREA SQ IN	†DUCO CI	DUCO CI PB TOP	DUCO CI NB TOP	APPROX. WEIGHT LBS
03, 04"	13 x 6"	21.5	**889.00**	**1,579.00**	**1,666.00**	24

REGULARLY FURNISHED: Duco Cast Iron Body with Secured Grate.

OUTLET VARIATIONS (Specify type of outlet and pipe size in inches.)

Outlet Type	Outlet Designation Outlet Type/Pipe Size	ADD
Inside Caulk	C03, C04	**N/C**
Threaded	T03, T04	**99.00**
No-Hub	Y03, Y04	**N/C**

OPTIONS:		ADD
-C	Flashing Clamp	**215.00**
-DBS	Alum Dome Bottom Strainer	**150.00**
-G	Galvanized CI	**636.00**
-M	Ductile Iron Grate	**440.00**
-U	Vandal Proof Screws	**188.00**

FIG. 2586 GUTTER DRAIN WITH SECURED GRATE

FUNCTION: Used in gutters and trenches where only a limited width is available for drainage. Long rectangular grate with large free area is capable of handling large amounts of water.

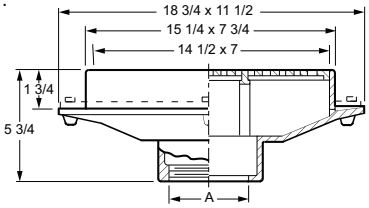

A OUTLET SIZE	TOP SIZE	FREE AREA SQ IN	†DUCO CI	DUCO CI PB TOP	DUCO CI NB TOP	APPROX. WEIGHT LBS
03, 04"	15 x 8"	31	**1,609.00**	**2,737.00**	**2,866.00**	43
05, 06"	15 x 8"	31	**1,609.00**	**2,737.00**	**2,866.00**	43

REGULARLY FURNISHED: Duco Cast Iron Body with Secured Grate.

OUTLET VARIATIONS (Specify type of outlet and pipe size in inches.)

Outlet Type	Outlet Designation Outlet Type/Pipe Size	ADD
Inside Caulk	C03, C04, C05, C06	**N/C**
Threaded	T03, T04, T05, T06	**99.00**
No-Hub	Y03, Y04, Y05, Y06	**See Fig. 2646Y for list add to THREADED body price**

OPTIONS:		ADD
-C	Flashing Clamp	**283.00**
-G	Galvanized CI	**759.00**
-M	Ductile Iron Grate	**448.00**
-U	Vandal Proof Screws	**188.00**

FIG. 2589 FLOOR DRAIN WITH HINGED GRATE AND SEDIMENT BUCKET

FUNCTION: Used in gutters and trenches where a sediment bucket is required. Hinged medium duty grate permits easy access to bucket for removal and cleaning.

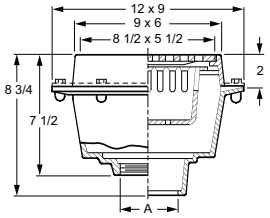

A OUTLET SIZE	TOP SIZE	FREE AREA SQ IN	†DUCO CI	DUCO CI PB TOP	DUCO CI NB TOP	APPROX. WEIGHT LBS
02, 03, 04"	9 x 6"	23	**1,121.00**	**1,556.00**	**1,935.00**	30

REGULARLY FURNISHED: Duco Cast Iron Body with Hinged Grate and Sediment Bucket.

OUTLET VARIATIONS (Specify type of outlet and pipe size in inches.)

Outlet Type	Outlet Designation Outlet Type/Pipe Size	ADD
Inside Caulk	C02, C03, C04	**N/C**
Threaded	T02, T03, T04	**99.00**
No-Hub	Y02, Y03, Y04	**See Fig. 2646Y for list add to THREADED body price**

OPTIONS:		ADD
-C	Flashing Clamp	**N/C**
-G	Galvanized CI	**552.00**
-M	Ductile Iron Grate	**552.00**
-U	Vandal Proof Screws	**188.00**

†REGULARLY FURNISHED

FIG. 2614 FLOOR DRAIN WITH HEAVY DUTY WIDE FLANGE FLASHING COLLAR

FUNCTION: Used in parking decks with precast construction where core drilling or boxing out for drain is desired for cost effective installation. The wide reinforced flange provides maximum support of drain.

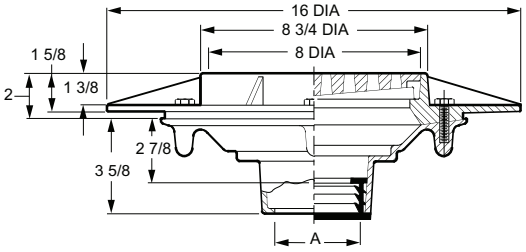

OUTLET VARIATIONS (Specify type of outlet and pipe size in inches.)

Outlet Type	Outlet Designation Outlet Type/Pipe Size	ADD
Inside Caulk	C02, C03, C04	N/C
Speedi-Set SW	L02, L03, L04	N/C
Speedi-Set XH	LXH02, LXH03, LXH04	N/C
Threaded	T02, T03, T04	99.00
No-Hub	Y02, Y03, Y04	N/C
Side Outlet	See Fig. 2648S for list add to THREADED body price	

OPTIONS:		ADD
-DBS	Dome Bottom Strainer, Aluminum	150.00
-FBSCI	Flat Bottom Strainer, CI	76.00
-G	Galvanized CI	956.00
-M	Ductile Iron Grate	274.00
-S	Square Top (Add for CI only. For NB or PB, see below)	414.00
-SNB	Square Top, add to CI	1,205.00
-SPB	Square Top, add to CI	998.00
-U	Vandal Proof Screws	188.00

A OUTLET SIZE	TOP SIZE	FREE AREA SQ IN	†DUCO CI	DUCO CI PB TOP	DUCO CI NB TOP	APPROX. WEIGHT LBS
02, 03, 04"	8 3/4"	14.25	**1,562.00**	**2,125.00**	**2,255.00**	34

REGULARLY FURNISHED: Duco Cast Iron Body, Heavy Duty Wide Flange Flashing Collar with Heavy Duty Tractor Grate. Gasket Seal Between Body and Collar.

FIG. 2624 FLOOR DRAIN WITH HEAVY DUTY WIDE FLANGE FLASHING COLLAR

FUNCTION: Used in parking decks with precast construction where core drilling or boxing out for drain is desired for cost effective installation. The wide reinforced flange provides maximum support of drain.

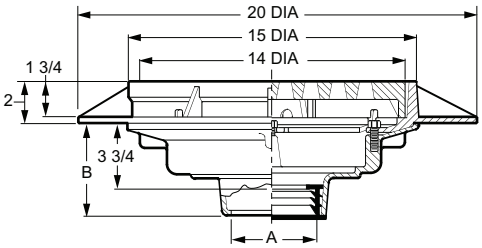

OUTLET VARIATIONS (Specify type of outlet and pipe size in inches.)

Outlet Type	Outlet Designation Outlet Type/Pipe Size	"B" Body HT. DIM.	ADD
Inside Caulk	C02, C03, C04, C05, C06	5"	N/C
	C08, C10	6"	N/C
Speedi-Set SW	L02, L03, L04	5"	N/C
Speedi-Set XH	LXH02, LXH03, LXH04	5"	N/C
Threaded	T02, T03, T04, T05, T06	3 3/4"	99.00
	T08, T10	5"	99.00
No-Hub	Y02, Y03, Y04, Y05, Y06	5"	N/C
	Y08, Y10	6"	N/C
Side Outlet	See Fig. 2648S for list add to THREADED body price		

OPTIONS:		ADD
-B	Bucket	415.00
-C	Underdeck Clamp	310.00
-DBSCI	Dome Bottom Strainer, CI	123.00
-FBSCI	Flat Bottom Strainer, CI	76.00
-G	Galvanized CI	1,409.00
-M	Ductile Iron Grate	847.00
-R	Sump Receiver	345.00
-S	Square Top (Add for CI only. For NB or PB, see below)	607.00
-SNB	Square Top, add to CI	2,534.00
-SPB	Square Top, add to CI	2,189.00
-U	Vandal Proof Screws	188.00

A OUTLET SIZE	TOP SIZE	FREE AREA SQ IN	†DUCO CI	DUCO CI PB TOP	DUCO CI NB TOP	APPROX. WEIGHT LBS
02, 03, 04"	15"	45	**3,248.00**	**4,639.00**	**4,936.00**	44
05, 06"	15"	45	**3,248.00**	**4,639.00**	**4,936.00**	44
08, 10"	16"	45	**3,641.00**	**5,032.00**	**5,329.00**	48

REGULARLY FURNISHED: Duco Cast Iron Body, Heavy Duty Wide Flange Flashing Collar with Heavy Duty ADA Tractor Grate. Gasket Seal Between Body and Collar.

†REGULARLY FURNISHED

FIG. 2630 LIGHT DUTY HOPPER DRAIN WITH SEDIMENT BUCKET AND GRATE

FUNCTION: Hopper type drain for use in areas not subject to traffic.

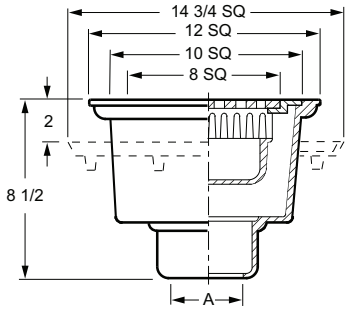

A OUTLET SIZE	TOP SIZE	FREE AREA SQ IN	†DUCO CI	DUCO CI PB TOP	DUCO CI NB TOP	APPROX. WEIGHT LBS
02, 03, 04"	12" SQ	23	**1,580.00**	**2,824.00**	**3,064.00**	30

REGULARLY FURNISHED: Duco Cast Iron Body with Sediment Bucket and Grate.

OUTLET VARIATIONS (Specify type of outlet and pipe size in inches.)

Outlet Type	Outlet Designation Outlet Type/Pipe Size	ADD
Inside Caulk	C02, C03, C04	**N/C**
Threaded	T02, T03, T04	**99.00**
No-Hub	Y02, Y03, Y04	**See Fig. 2646Y for list add to THREADED body price**

OPTIONS:		ADD
-BT	Bell Trap Assembly	**228.00**
-F	Flange, Cast Iron	**471.00**
-FC	Flange w/Flashing Clamp	**745.00**
-G	Galvanized CI	**1,027.00**
-M	Ductile Iron Grate	**440.00**
-MBG	Ductile Iron Bucket & Grate	**683.00**
-P	Trap Primer Connection	**246.00**
-U	Vandal Proof Screws	**188.00**
-12	Half Grate	**156.00**
-13	Three Quarter Grate	**156.00**

FIG. 2631 LIGHT DUTY HOPPER DRAIN WITH SEDIMENT BUCKET

FUNCTION: Hopper type drain for use in areas not subject to traffic.

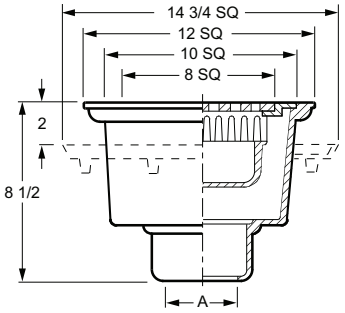

A OUTLET SIZE	TOP SIZE	FREE AREA SQ IN	†DUCO CI	DUCO CI PB TOP	DUCO CI NB TOP	APPROX. WEIGHT LBS
02, 03, 04"	12" SQ	23	**1,329.00**	**2,215.00**	**2,312.00**	30

REGULARLY FURNISHED: Duco Cast Iron Body with Sediment Bucket.

OUTLET VARIATIONS (Specify type of outlet and pipe size in inches.)

Outlet Type	Outlet Designation Outlet Type/Pipe Size	ADD
Inside Caulk	C02, C03, C04	**N/C**
Threaded	T02, T03, T04	**99.00**
No-Hub	Y02, Y03, Y04	**See Fig. 2646Y for list add to THREADED body price**

OPTIONS:		ADD
-BM	Ductile Iron Bucket	**240.00**
-F	Flange, Cast Iron	**471.00**
-FC	Flange w/Flashing Clamp	**745.00**
-G	Galvanized CI	**966.00**
-P	Trap Primer Connection	**246.00**

FIG. 2632 LIGHT DUTY HOPPER DRAIN WITH FLAT BOTTOM STRAINER AND GRATE

FUNCTION: Hopper type drain for use in areas not subject to traffic.

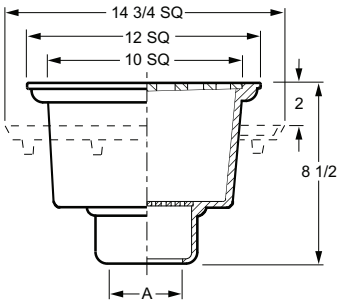

A OUTLET SIZE	TOP SIZE	FREE AREA SQ IN	†DUCO CI	DUCO CI PB TOP	DUCO CI NB TOP	APPROX. WEIGHT LBS
02, 03, 04"	12" SQ	28	**1,273.00**	**2,517.00**	**2,757.00**	30

REGULARLY FURNISHED: Duco Cast Iron Body with Flat Bottom Strainer and Grate.

OUTLET VARIATIONS (Specify type of outlet and pipe size in inches.)

Outlet Type	Outlet Designation Outlet Type/Pipe Size	ADD
Inside Caulk	C02, C03, C04	**N/C**
Threaded	T02, T03, T04	**99.00**
No-Hub	Y02, Y03, Y04	**See Fig. 2646Y for list add to THREADED body price**

OPTIONS:		ADD
-BT	Bell Trap Assembly	**228.00**
-DBS	Aluminum Dome Bottom Strainer	**150.00**
-F	Flange, Cast Iron	**471.00**
-FC	Flange w/Flashing Clamp	**745.00**
-G	Galvanized CI	**966.00**
-M	Ductile Iron Grate	**440.00**
-P	Trap Primer Connection	**246.00**
-U	Vandal Proof Screws	**188.00**
-12	Half Grate	**156.00**
-13	Three Quarter Grate	**156.00**

†REGULARLY FURNISHED

FIG. 2633 LIGHT DUTY HOPPER DRAIN WITH FLAT BOTTOM STRAINER

FUNCTION: Hopper type drain for use in areas not subject to traffic.

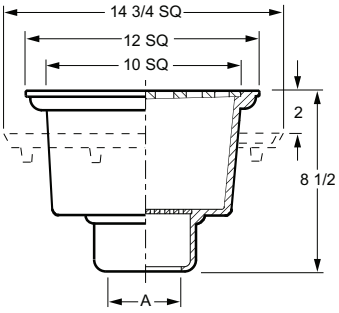

OUTLET VARIATIONS (Specify type of outlet and pipe size in inches.)

Outlet Type	Outlet Designation Outlet Type/Pipe Size	ADD
Inside Caulk	C02, C03, C04	**N/C**
Threaded	T02, T03, T04	**99.00**
No-Hub	Y02, Y03, Y04	**See Fig. 2646Y for list add to THREADED body price**

OPTIONS:		ADD
-DBS	Alum Dome Bottom Strainer	**150.00**
-F	Flange, Cast Iron	**471.00**
-FC	Flange w/Flashing Clamp	**745.00**
-G	Galvanized CI	**876.00**
-P	Trap Primer Connection	**246.00**

A OUTLET SIZE	TOP SIZE	FREE AREA SQ IN	†DUCO CI	DUCO CI PB TOP	DUCO CI NB TOP	APPROX. WEIGHT LBS
02, 03, 04"	12" SQ	28	**1,029.00**	**1,915.00**	**2,012.00**	30

REGULARLY FURNISHED: Duco Cast Iron Body with Flat Bottom Strainer.

FIG. 2640 BLOOD AND WATER DRAINS

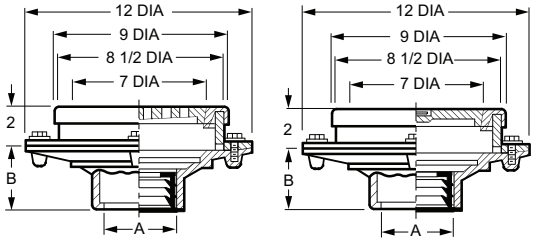

OUTLET VARIATIONS (Specify type of outlet and pipe size in inches.)

Outlet Type	Outlet Designation Outlet Type/Pipe Size	"B" Body HT. DIM.	ADD
Inside Caulk	C02, C03, C04	3 3/4"	**N/C**
Speedi-Set SW	L02, L03, L04	3 3/4"	**N/C**
Speedi-Set XH	LXH02, LXH03, LXH04	3 3/4"	**N/C**
Threaded	T02, T03, T04	2"	**198.00**
No-Hub	Y02, Y03, Y04	3 3/4"	**N/C**

OPTIONS:		ADD
-FBSCI	Flat Bottom Strainer, CI, ea	**76.00**
-G	Galvanized CI	**1,084.00**
-M	Ductile Iron Tops	**694.00**
-RB	RB Grate & Plug	**2,873.00**

A OUTLET SIZE	TOP SIZE	FREE AREA SQ IN	†DUCO CI GRATE & PLUG	DUCO CI w/BRZ GRATE & PLUG (RB)	DUCO CI w/NB GRATE & PLUG(RNB)	APPROX. WEIGHT LBS
02, 03, 04"	9"	10.3	**1,933.00**	**4,806.00**	**5,487.00**	50

REGULARLY FURNISHED: Two (2) Duco Cast Iron Bodies with Flashing Collar and Bronze Rim, Cast Iron Grate and Ground Joint Plug.

†REGULARLY FURNISHED

FIG. 2641T HUB ADAPTOR-FEMALE THREAD

FUNCTION: Allows a threaded connection to be adapted to a hub connection.

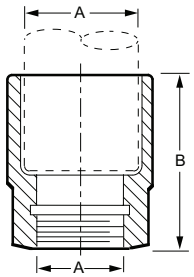

A OUTLET SIZE	B	†DUCO CI	ADD FOR: GALV CI (-G)	APPROX. WEIGHT LBS
0125"	5"	**191.00**	**130.00**	5
0150, 02"	4"	**191.00**	**130.00**	5
0250"	4 3/4"	**191.00**	**130.00**	5
03"	4 1/2"	**191.00**	**130.00**	5
04"	4 3/4"	**246.00**	**139.00**	6
05"	5 1/2"	**508.00**	**206.00**	11
06"	5 1/2"	**607.00**	**238.00**	11

REGULARLY FURNISHED: Duco Cast Iron.

FIG. 2643 CAULK REDUCER

FUNCTION: Used with inside caulk bottom outlet drains to reduce the size of the connection.

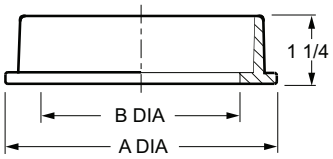

A DIA. x B DIA. OUTLET SIZE	†DUCO CI	GALV CI (-G)	APPROX.WEIGHT LBS
03 X 02"	**57.00**	**87.00**	1
04 X 02"	**70.00**	**100.00**	2
04 X 03"	**98.00**	**128.00**	2
05 X 04"	**123.00**	**153.00**	3
06 X 04"	**150.00**	**180.00**	3
06 X 05"	**177.00**	**207.00**	6
08 X 06"	**210.00**	**240.00**	9

REGULARLY FURNISHED: Duco Cast Iron.

FIG. 2645T HUB ADAPTOR-MALE THREAD

FUNCTION: Converts threaded connection to hub for caulking.

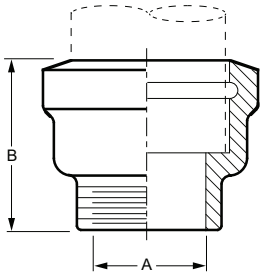

A OUTLET SIZE	B	†DUCO CI	GALV CI (-G)	APPROX. WEIGHT LBS
02"	4 1/2"	**123.00**	**223.00**	3
03"	4 1/2"	**228.00**	**328.00**	5
04"	4 1/2"	**308.00**	**466.00**	6
05"	4 1/2"	**508.00**	**666.00**	8
06"	4 1/2"	**583.00**	**741.00**	9
08"	4 1/2"	**1,064.00**	**1,222.00**	11

REGULARLY FURNISHED: Duco Cast Iron.

†REGULARLY FURNISHED

FIG. 2646S STRAIGHT SPIGOT ADAPTOR

FUNCTION: Convert threaded connections to spigot for caulking.

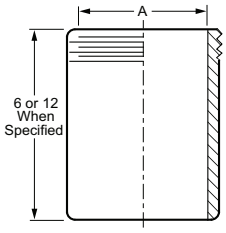

A OUTLET SIZE	†DUCO CI 6" Lengths	GALV CI (-G) 6" Lengths	APPROX. WEIGHT LBS	A OUTLET SIZE	†DUCO CI 12" Lengths (-2)	GALV CI 12" Lengths (-2-G)	APPROX. WEIGHT LBS
02"	**123.00**	**221.00**	2	02"	**252.00**	**350.00**	3
03"	**177.00**	**275.00**	4	03"	**515.00**	**613.00**	4
04"	**282.00**	**380.00**	5	04"	**587.00**	**685.00**	5
05"	**687.00**	**785.00**	7	05"	**766.00**	**864.00**	14
06"	**854.00**	**952.00**	8	06"	**909.00**	**1,007.00**	17
08"	**956.00**	**1,054.00**	10	08"	**1,053.00**	**1,151.00**	
10"	**1,140.00**	**1,238.00**	12				
12"	**1,425.00**	**1,523.00**	15				

REGULARLY FURNISHED: Duco Cast Iron.

FIG. 2646Y NO-HUB ADAPTOR

FUNCTION: Converts threaded connection to no-hub connections.

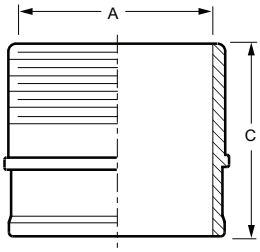

A OUTLET SIZE	C	†DUCO CI	GALV CI (-G)	APPROX. WEIGHT LBS	A OUTLET SIZE	†DUCO CI 12" Lengths (-2)	GALV CI 12" Lengths (-2-G)	APPROX. WEIGHT LBS
02"	2 3/4"	**123.00**	**221.00**	2	02"	**252.00**	**350.00**	3
03"	3"	**177.00**	**275.00**	4	03"	**515.00**	**613.00**	4
04"	3"	**282.00**	**380.00**	5	04"	**587.00**	**685.00**	5
05"	4"	**687.00**	**785.00**	7	05"	**766.00**	**864.00**	14
06"	4"	**854.00**	**952.00**	8	06"	**909.00**	**1,007.00**	17
08"	4 1/2"	**956.00**	**1,054.00**	10	08"	**1,053.00**	**1,151.00**	
10"	4 1/2"	**1,140.00**	**1,238.00**	12				
12"	5 1/2	**1,425.00**	**1,523.00**	15				

REGULARLY FURNISHED: Duco Cast Iron.

FIG. 2648S 90° SPIGOT ADAPTOR

FUNCTION: Converts threaded connection to 90° spigot for caulking.

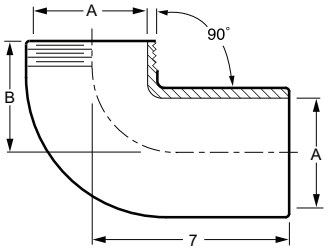

A OUTLET SIZE	B	†DUCO CI	GALV CI (-G)	APPROX. WEIGHT LBS
02"	3"	**435.00**	**572.00**	5
03"	3 1/2"	**687.00**	**824.00**	8
04"	4"	**777.00**	**1,059.00**	13
05"	4 1/2"	**889.00**	**1,171.00**	15
06"	5"	**922.00**	**1,362.00**	16

REGULARLY FURNISHED: Duco Cast Iron.

NOTE: When ordering with a bottom outlet drain to provide a side outlet spigot connection, the drain must be specified with a threaded outlet.

†REGULARLY FURNISHED

FIG. 2650 GARAGE AND PLANTING AREA DRAIN WITH EXTRA LARGE BUCKET

FUNCTION: Heavy duty floor drain with an integral trap incorporates a large sediment bucket to intercept chips and debris. Floor level cleanout provides access to sewer line and backwater valve. Used in garages and industrial areas where compact trap drain provides roughing advantages.

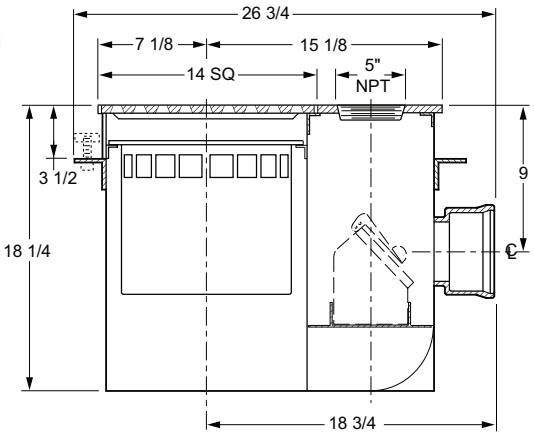

OUTLET VARIATIONS (Specify type of outlet and pipe size in inches.)

Outlet Type	Outlet Designation Outlet Type/Pipe Size	ADD
Inside Caulk	C03, C04	N/C
No-Hub	Y03, Y04	N/C

OPTIONS:		ADD
-F	Flashing Flange	N/C
-FC	Flange and Flashing Clamp	687.00
-U	Vandal Proof Screws	308.00
-V	Backwater Valve	1,248.00

A OUTLET SIZE	TOP SIZE	FREE AREA SQ IN	†GALV STL DI TOP	GALV STL PB TOP	GALV STL NB TOP	APPROX. WEIGHT LBS
03, 04"	22 x 14"	63	**20,505.00**	**25,106.00**	**25,624.00**	100

REGULARLY FURNISHED: Galvanized Coated Fabricated Steel Body with Heavy Duty Ductile Iron Grate, Suspended Bucket and Bronze Cleanout Plug.

FIG. 2651 ECCENTRIC REDUCER, FIG. 2652 FACE REDUCER BUSHING

FUNCTION: Fig. 2651 is used with side outlet drains to reduce outlet one pipe size. Fig. 2652 is used to reduce threaded connection.

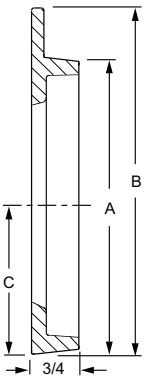

Fig. 2651

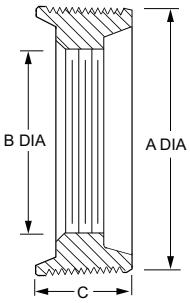

Fig. 2652

FIG. 2651 SIZE	A DIA	B DIA	C	†DUCO CI	GALV CI (-G)	APPROX. WEIGHT LBS
03 x 02"	3"	4"	1 1/2"	**57.00**	**87.00**	1
04 x 03"	4 1/4"	5"	2"	**112.00**	**142.00**	2
05 x 04"	5 1/4"	6"	2 3/4"	**129.00**	**159.00**	3
06 x 05"	6 1/4"	7"	3"	**185.00**	**215.00**	6

REGULARLY FURNISHED: Duco Cast Iron.

FIG. 2652 SIZE	A DIA	B DIA	C	†DUCO CI	GALV CI (-G)	APPROX. WEIGHT LBS
02 x 0150"	2"	1 1/2"	3/4"	**104.00**	**134.00**	1
03 x 02"	3"	2"	1 1/4"	**126.00**	**156.00**	2
04 x 02"	4"	2"	1 5/16"	**137.00**	**167.00**	3
04 x 03"	4"	3"	1 5/16"	**137.00**	**167.00**	6
05 x 04"	5"	4"	1 5/16"	**177.00**	**207.00**	7
06 x 04"	6"	4"	1 9/16"	**177.00**	**207.00**	8

†REGULARLY FURNISHED

FIG. 2670, 2671 PLANTING AREA DRAINS FOR SMALL AREAS

FUNCTION: Provides for the drainage of any excess moisture which builds up in planting or flower boxes. Heavy stainless steel mesh screen over the dome prevents soil or stones from entering the drain line.

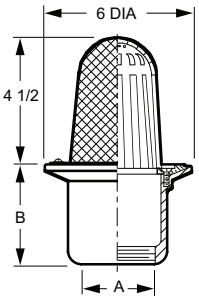

OUTLET VARIATIONS (Specify type of outlet and pipe size in inches.)

Outlet Type	Outlet Designation Outlet Type/Pipe Size	ADD
Inside Caulk	C02	N/C
Threaded (2670)	T02, T03	N/C
(2671)	T02, T03, T04	N/C
No-Hub	Y02, Y03, Y04	See Fig. 2646Y for list add to THREADED body

OPTIONS:		ADD
-G	Galvanized CI	213.00
-NBD	Nickel Bronze Dome	409.00
-PBD	Polished Bronze Dome	274.00
-U	Vandal Proof	70.00

FIG. NO.	A OUTLET SIZE	B BODY DEPTH	FLANGE DIA	FREE AREA	†DUCO CI BRZ DOME	ALL BRZ (BB)	APPROX. WEIGHT LBS
2670	02, 03"	2"	6"	25	**1,189.00**	**1,542.00**	5
2671	02, 03"	4"	6"	25	**1,668.00**	**2,088.00**	7
2671	04"	4"	6"	25	**2,080.00**	**3,190.00**	9

REGULARLY FURNISHED: Duco Cast Iron Body, Bronze Flashing Clamp, Secured Bronze Dome with Stainless Steel Mesh Screen.

FIG. 2673, 2674 PLANTING AREA DRAINS FOR SMALL AREAS

FUNCTION: Provides for the drainage of any excess moisture which builds up in planting or flower boxes. Heavy stainless steel mesh screen over the dome prevents soil or stones from entering the drain line.

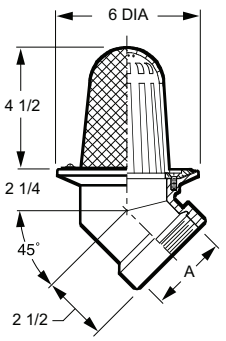

Fig. 2673

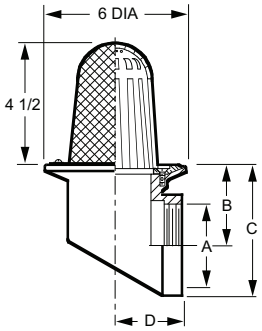

Fig. 2674

OUTLET VARIATIONS (Specify type of outlet and pipe size in inches.)

Outlet Type	Outlet Designation Outlet Type/Pipe Size	ADD
Threaded	T02, T03, T04	N/C
No-Hub	Y02, Y03, Y04	See Fig. 2646Y for list add to THREADED body

OPTIONS:		ADD
-G	Galvanized CI	213.00
-NBD	Nickel Bronze Dome	409.00
-PBD	Polished Bronze Dome	274.00
-U	Vandal Proof	70.00

A OUTLET SIZE	FLANGE DIA	B	C	D	FREE AREA	†DUCO CI BRZ DOME	ALL BRZ (BB)	APPROX. WEIGHT LBS
02"	6"	2 1/2"	4"	2 1/2"	25	**1,329.00**	**1,764.00**	6
03"	6"	3"	5 1/4"	3"	25	**1,689.00**	**2,434.00**	7
04"	6"	3 1/2"	4"	6 1/4"	25	**1,689.00**	**2,434.00**	10

REGULARLY FURNISHED: Duco Cast Iron Body, Bronze Flashing Clamp, Secured Bronze Dome with Stainless Steel Mesh Screen.

†REGULARLY FURNISHED

FIG. 2675 PLANTING AREA DRAIN FOR LARGE AREAS

FUNCTION: Used to drain excess moisture which builds up in large planting or flower boxes. Extra large mesh covered dome insures greater drainage area and prevents soil or stones from entering the drain line.

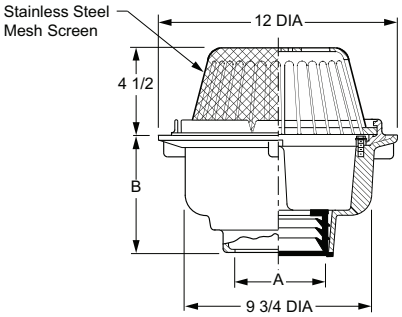

OUTLET VARIATIONS (Specify type of outlet and pipe size in inches.)

Outlet Type	Outlet Designation Outlet Type/Pipe Size	"B" Body HT. DIM.	ADD
Inside Caulk	C02, C03, C04, C05, C06	6"	N/C
Speedi-Set SW	L02, L03, L04	6"	N/C
Speedi-Set XH	LXH02, LXH03, LXH04	6"	N/C
Threaded	T02, T03, T04, T05, T06	4 3/4"	99.00
No-Hub	Y02, Y03, Y04, Y05, Y06	6"	N/C

OPTIONS:		ADD
-AD	Aluminum Dome	230.00
-BB	Bronze Body and Collar	4,762.00
-C2	Secondary Flashing Clamp	238.00
-CID	Cast Iron Dome	N/C
-E	Ext, ea inch or fraction	108.00
-G	Galvanized CI	507.00
-R	Sump Receiver	327.00
-U	Vandal Proof	147.00

A OUTLET SIZE	FLANGE DIA	FREE AREA SQ IN	†DUCO CI POLY DOME	DUCO CI BRZ DOME	APPROX. WEIGHT LBS
02, 03"	12"	53	**1,400.00**	**1,924.00**	24
04, 05"	12"	53	**1,400.00**	**1,924.00**	28
06"	12"	53	**1,400.00**	**1,924.00**	29

REGULARLY FURNISHED: Duco Cast Iron Body and Flashing Clamp with Polyethylene Dome and Stainless Steel Mesh Screen.

FIG. 2680 PLANTING AREA DRAIN FOR LARGE AREAS

FUNCTION: The perforated standpipe, when surrounded by gravel fill, provides drainage of excess water from the planting or flower box. Top of standpipe is set at ground level and protected by dome cap. Excess surface water overflows into top of standpipe.

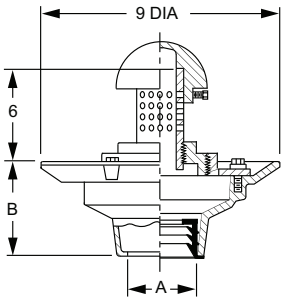

OUTLET VARIATIONS (Specify type of outlet and pipe size in inches.)

Outlet Type	Outlet Designation Outlet Type/Pipe Size	"B" Body HT. DIM.	ADD
Inside Caulk	C02, C03, C04	4"	N/C
Speedi-Set SW	L02, L03, L04	4"	N/C
Speedi-Set XH	LXH02, LXH03, LXH04	4"	N/C
Threaded	T02, T03, T04	3"	99.00
No-Hub	Y02, Y03, Y04	4"	N/C

OPTIONS:		ADD
-CPD	CP Dome & Standpipe	391.00
-G	Galvanized CI	251.00
-LS	Longer Standpipe over 6" per inch	123.00
-NBD	NB Dome, SS Standpipe	1,302.00
-SSM	SS Mesh over 6" Standpipe	368.00
	per inch over 6"	59.00

		DEDUCT
-RBD	Rough Bronze Dome	59.00
-SP	Solid Standpipe	442.00

A OUTLET SIZE	STANDPIPE HEIGHT	†DUCO CI PB DOME	DUCO CI CP DOME	APPROX. WEIGHT LBS
02, 03, 04"	6"	**2,566.00**	**2,957.00**	21

REGULARLY FURNISHED: Duco Cast Iron Body and Flashing Clamp with Bronze Standpipe and Polished Bronze Dome.

†REGULARLY FURNISHED

FIG. 2685 PLANTING AREA DRAIN FOR LARGE AREAS

FUNCTION: The perforated standpipe when surrounded by gravel fill, provides drainage of excess water from the planting or flower box. Top of standpipe is set at ground level and protected by dome cap. Excess surface water overflows into top of standpipe.

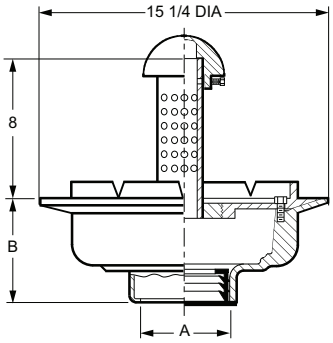

A OUTLET SIZE	STANDPIPE HEIGHT	†DUCO CI PB DOME	DUCO CI CP DOME	APPROX. WEIGHT LBS
02, 03, 04"	8"	**3,254.00**	**3,327.00**	32

REGULARLY FURNISHED: Duco Cast Iron Body and Flashing Collar with Bronze 8" High Standpipe and Polished Bronze Dome.

OUTLET VARIATIONS (Specify type of outlet and pipe size in inches.)

Outlet Type	Outlet Designation Outlet Type/Pipe Size	"B" Body HT. DIM.	ADD
Inside Caulk	C02, C03, C04	5"	**N/C**
Speedi-Set SW	L02, L03, L04	5"	**N/C**
Speedi-Set XH	LXH02, LXH03, LXH04	5"	**N/C**
Threaded	T02, T03, T04	3 3/4"	**99.00**
No-Hub	Y02, Y03, Y04	5"	**N/C**

OPTIONS:		ADD
-G	Galvanized CI	**825.00**
-LS	Longer Standpipe over 8" per inch	**293.00**
-NBD	NB Dome, SS Standpipe	**1,744.00**
-SSM	SS Mesh over 8" Standpipe	**507.00**
	per inch over 8"	**69.00**

		DEDUCT
-RBD	Rough Bronze Dome	**76.00**
-SP	Solid Standpipe	**442.00**

FIG. 2690 COMBINATION GARBAGE CAN WASHER AND DRAIN

FUNCTION: Used in areas where it is desired to wash the interior of garbage and other cans, and prevent the solids from entering the waste line. The exclusive Smith design combines an engineered floor drain with a "single orifice" can washing nozzle. The spray from the nozzle is adjustable from a solid stream to a driving fine mist, providing a means for thoroughly scouring the interior of the can. The slotted sediment bucket catches all debris, and provides ample drainage. "Safe-Set" design insures bucket replacement after cleaning since top grate cannot be inserted unless bucket is in place. Not intended for any traffic.

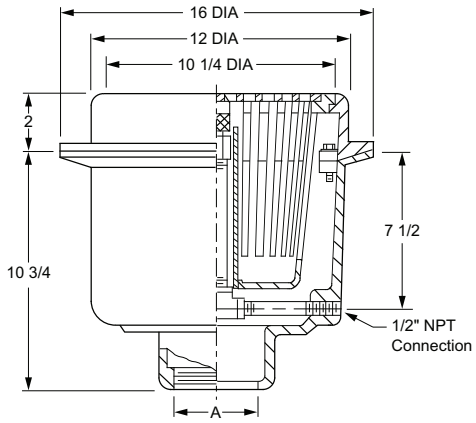

A OUTLET SIZE	TOP SIZE	FREE AREA SQ IN	†GALV CI	GALV CI PB TOP	GALV CI NB TOP	APPROX. WEIGHT LBS
03, 04"	12"	28.5	**4,785.00**	**5,686.00**	**5,807.00**	86
05, 06"	12"	28.5	**4,785.00**	**5,686.00**	**5,807.00**	86

REGULARLY FURNISHED: All Galvanized Cast Iron Body with Flashing Collar, Loose Set Grate, Sediment Bucket, Pipe Assembly with Chrome Plated Bronze Adjustable Spray Nozzle.

OUTLET VARIATIONS (Specify type of outlet and pipe size in inches.)

Outlet Type	Outlet Designation Outlet Type/Pipe Size	ADD
Inside Caulk	C03, C04, C05, C06	**N/C**
Threaded	T03, T04, T05, T06	**99.00**
No-Hub		**N/C**

OPTIONS:		ADD
-BS	SS Mesh lined Bucket	**607.00**
-FBSCI	Flat Bottom Strainer, CI	**76.00**
-S	Square Top, CI	**441.00**
-SNB	Square Top, add to CI	**1,644.00**
-SPB	Square Top, add to CI	**1,447.00**

		DEDUCT
-CI	Duco Cast Iron	**1,171.00**

For Water Supply Control Box, See Fig 3380 or 3385

†REGULARLY FURNISHED

FIG. 2692 QUAD CLOSE TRAP SEAL

FUNCTION: The Quad Close Trap Seal forms a barrier to minimize the evaporation of the trap seal of a floor drain. The Quad Close Trap Seal will open to allow drainage and close when there is no flow. It is for use in floor drain outlets or the adjustable strainer throats.

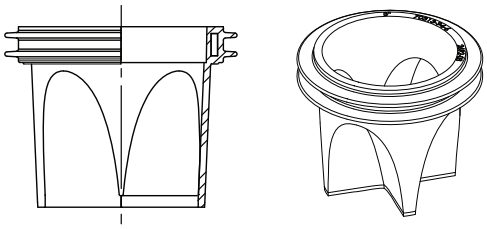

FIG. NO.	PIPE SIZE	
2692-0150	1 1/2"	**POA**
2692-02	2"	**POA**
2692-03	3"	**POA**
2692-0350*	3 1/2"	**POA**
2692-04	4"	**POA**
2692-06	6"	**POA**

*A bucket cannot be used with the 2692-0350 or any other version used in a strainer head.

Patent No. 8,844,572

Refer to submittal for more information.

FIG. 2695 AUXILIARY INLET FITTINGS-SPIGOT OUTLET

FUNCTION: Used as a means of inserting a trap primer connection in the outlet of a conventional floor drain.

SPIGOT OUTLET

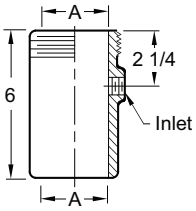

THREADED OUTLET

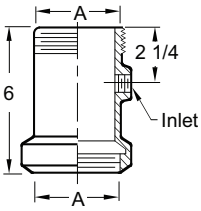

CAULK OUTLET

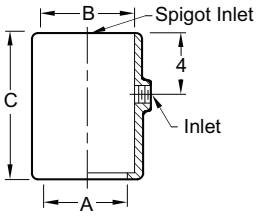

INLET/ OUTLET SIZE	AUXILIARY INLET SIZE*	†DUCO CI	GALV CI	APPROX. WEIGHT LBS
02"	050, 075"	**246.00**	**369.00**	3
03"	050, 075"	**246.00**	**369.00**	6
04"	050, 075"	**246.00**	**369.00**	10

REGULARLY FURNISHED: Duco Cast Iron with 1/2" NPT Inlet Tapping.

Fig. 2695S	(Shown)
Fig. 2695Y	Same as 2695S except spigot is sized for Service Weight and/or No-Hub
Fig. 2695Y-2	Same as 2695S except both ends are sized for Service Weight and/or No-Hub
Fig. 2695Y-1	Same as 2695Y-2 except Inlet is not tapped for Trap Primer Connection

*Specify P050 (1/2") or P075 (3/4") Auxiliary Inlet Size

FIG. 2696 AUXILIARY INLET FITTINGS-THREADED OUTLET

FUNCTION: Used as a means of inserting a trap primer connection in the outlet of a conventional floor drain.

2696 Same as 2695 with Threaded Outlet

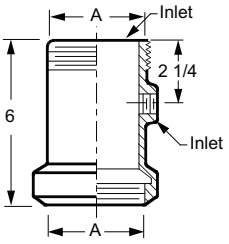

*Specify P050 (1/2") or P075 (3/4") Auxiliary Inlet Size

A OUTLET SIZE	AUXILIARY INLET SIZE*	†DUCO CI	GALV CI	APPROX. WEIGHT LBS
02"	050, 075"	**246.00**	**369.00**	3
03"	050, 075"	**246.00**	**369.00**	6
04"	050, 075"	**246.00**	**369.00**	10

REGULARLY FURNISHED: Duco Cast Iron with 1/2" NPT Inlet Tapping.

FIG. 2697 AUXILIARY INLET FITTINGS-CAULK OUTLET

FUNCTION: Used as a means of inserting a trap primer connection in the outlet of a conventional floor drain.

OPTIONS: **ADD**
-N2 2" NPT Auxiliary Inlet (3" & 4" only) **442.00**

2697 Same as 2695 with Caulk Outlet

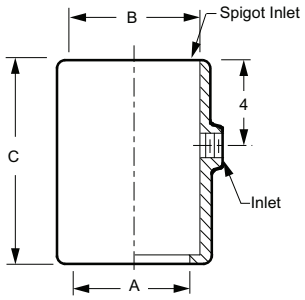

INLET/ OUTLET SIZE	AUXILIARY INLET SIZE*	B	C	†DUCO CI	GALV CI	APPROX. WEIGHT LBS
02"	050, 075"	3	7 1/2"	**246.00**	**369.00**	3
03"	050, 075"	4	7 1/2"	**246.00**	**369.00**	6
04"	050, 075"	4	8 1/2"	**246.00**	**369.00**	10

*Specify P050 (1/2") or P075 (3/4") Auxiliary Inlet Size

REGULARLY FURNISHED: Duco Cast Iron with 1/2" NPT Inlet Tapping.

FIG. 2698 PRIME-EZE® WATER SAVER TRAP PRIMER

FUNCTION: The water saver trap primer utilizes the temporary "head" of water in the p-trap which occurs during use of certain plumbing fixtures like lavatories and drinking fountains. This temporary head of water is sufficient to cause an "overflow" through the primer tube connection to allow a small amount of water to flow by gravity through a pipe under the floor to the floor drain trap primer connection. Thus, the floor drain trap seal is maintained.

OPTIONS: **ADD**
-ADA **73.00**

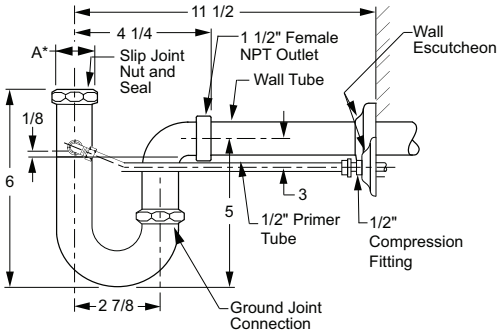

INLET/ OUTLET SIZE	†17 GA CP SATIN BRONZE (-SF)	17 GA CP POLISHED BRONZE -(CP)	APPROX. WEIGHT LBS
0150"	**739.00**	**847.00**	4

NOTE: Invert of connection located 1/8" above static water level enabling "overflow" into primer tube when temporary head of water is created.

REGULARLY FURNISHED: Satin Chrome Plated Cast Bronze P-trap with Ground Joint Connection and Escutcheons, 1/2" Primer Tube with Compression Fitting Connection at Wall.

†REGULARLY FURNISHED

FIG. 2699LF, FIG. 2699-1LF AUTOMATIC TRAP PRIMERS - LEAD FREE

FUNCTION: Used where trapped drains are installed in locations used infrequently or other conditions might permit water seal to evaporate, allowing sewer gas or objectionable and contaminating odors to escape through drain. A trap primer is recommended to compensate for evaporation while providing a water seal in the trap at all times.

FOR FIXTURES W/MIN. 2.5 GPM FLOW

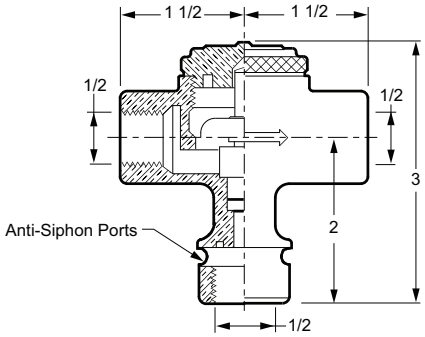

Fig. 2699

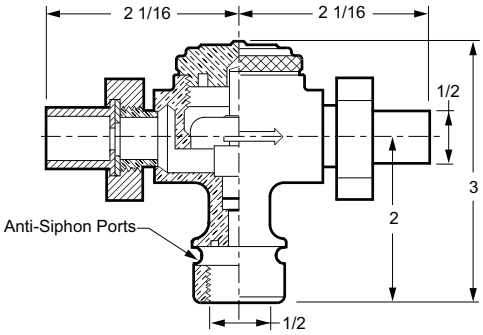

Fig. 2699-1

FIG. NO.	CONN. SIZE	†CAST BRONZE	CP BRONZE(-CP)	APPROX. WEIGHT LBS
2699LF	1/2" NPT	**652.00**		3
2699-1LF	1/2" Sweat	**652.00**		3
2699CPLF	1/2" NPT		**717.00**	3
2699-1CPLF	1/2" Sweat		**717.00**	3

REGULARLY FURNISHED: Lead Free Cast Bronze with 1/2" Connection as indicated by Figure Number Selected.

COMPLIES with LEAD PLUMBING LAW "CERTIFIED by IAPMO R & T" FILE NO. 8477 (NSF/ANSI 372)

Listed to STD.1018

NOTE: MUST BE LOCATED IN AN ACCESSIBLE LOCATION.

FIG. 2710 WIDE HEAVY DUTY MODULAR TRENCH DRAIN

FUNCTION: Used as a ramp drain in loading or parking areas where a wide continuous trench drain is required to handle moderate traffic loads and serve as a reservoir for large water runoff. Can also be used individually as an area drain ("A" Section Only).

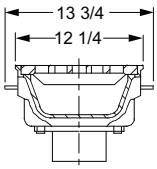

End Section View

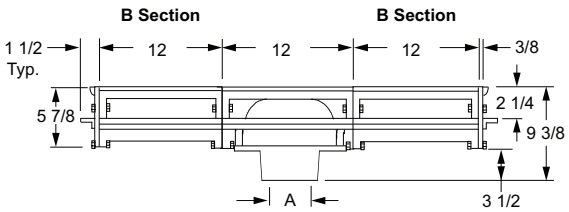

A Section

A OUTLET SIZE	TOP SIZE	FREE AREA SQ IN (EACH SECTION)	†DUCO CI	DUCO CI PB TOP	DUCO CI NB TOP	APPROX. WEIGHT LBS
03, 04, 05"	12 x 12"	39.3	**2,513.00**	**3,742.00**	**3,938.00**	51
06, 08"	12 x 12"	39.3	**2,513.00**	**3,742.00**	**3,938.00**	
Ea Add'l 12" Section			**2,513.00**	**3,742.00**	**3,938.00**	43

REGULARLY FURNISHED: Duco Cast Iron Flanged Body Outlet Section "A" and Flanged End Plate with Cast Iron Anti-Shift Loose Set Square Hole Grate.

OUTLET VARIATIONS (Specify type of outlet and pipe size in inches.)

Outlet Type	Outlet Designation Outlet Type/Pipe Size	ADD
Inside Caulk	C03, C04, C05, C06, C08	**N/C**
No-Hub	Y03, Y04, Y05, Y06, Y08	**N/C**

OPTIONS:

		ADD "A" (Outlet) Per Section	ADD "B" (Add'l) Per Section
-ARIO	ARC In and Out	**983.00**	**983.00**
-C	Flashing Clamp	**191.00**	**191.00**
-DBSCI	Dome Bottom Strainer, CI	**365.00**	
-EO	End Outlet		**485.00**
-G	Galvanized CI	**825.00**	**825.00**
-M	Ductile Iron Grate	**915.00**	**915.00**
-NBHP	Heelproof, add to CI	**2,249.00**	**2,249.00**
-PBHP	Heelproof, add to CI	**2,054.00**	**2,054.00**
-U	Vandal Proof Screws	**308.00**	**308.00**

NOTE: The above option prices are per section.

Fig. 2710 .....“A” Section
Fig. 2711 .....“A” Section.....with (1) “B” Section
Fig. 2712 .....“A” Section.....with (2) “B” Sections
Fig. 2713 .....“A” Section.....with (3) “B” Sections
Fig. 2714 .....“A” Section.....with (4) “B” Sections
Fig. 2715 .....“A” Section.....with (5) “B” Sections
Fig. 2716 .....“A” Section.....with (6) “B” Sections
Fig. 2717 .....“A” Section.....with (7) “B” Sections
Fig. 2718 .....“A” Section.....with (8) “B” Sections
Fig. 2719 .....“A” Section.....with (9) “B” Sections
Fig. 2720 .....“A” Section.....with (10) “B” Sections

†REGULARLY FURNISHED

FIG. 2710-DH WIDE HEAVY DUTY MODULAR TRENCH DRAIN

FUNCTION: Used as a ramp drain in loading or parking areas where a wide continuous trench drain is required to handle moderate traffic loads and serve as a reservoir for large water runoff. Can also be used individually as an area drain ("A" Section Only).

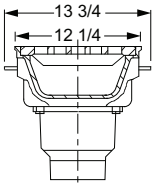

End Section View

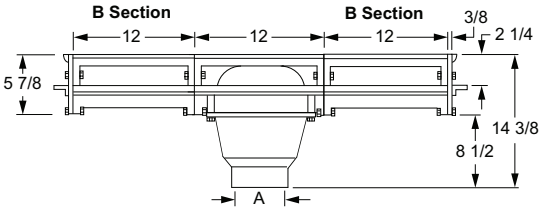

A Section

A OUTLET SIZE	TOP SIZE	FREE AREA SQ IN (EACH SECTION)	†DUCO CI	DUCO CI PB TOP	DUCO CI NB TOP	APPROX. WEIGHT LBS
03, 04, 05"	12 x 12"	39.3	**2,513.00**	**3,742.00**	**3,938.00**	51
06	12 x 12"	39.3	**2,513.00**	**3,742.00**	**3,938.00**	
Ea Add'l 12" Section			**2,513.00**	**3,742.00**	**3,938.00**	43

REGULARLY FURNISHED: Duco Cast Iron Flanged Body Outlet Section "A" and Flanged End Plate with Cast Iron Anti-Shift Loose Set Square Hole Grate.

OUTLET VARIATIONS (Specify type of outlet and pipe size in inches.)

Outlet Type	Outlet Designation Outlet Type/Pipe Size	ADD
Inside Caulk	C03, C04, C05, C06	**N/C**
No-Hub	Y03, Y04, Y05, Y06	**N/C**

OPTIONS:

		ADD "A" (Outlet) Per Section	ADD "B" (Add'l) Per Section
-ARIO	ARC In and Out	**983.00**	**983.00**
-B	Sediment Bucket	**724.00**	
-C	Flashing Clamp	**191.00**	**191.00**
-DBSCI	Dome Bottom Strainer, CI	**365.00**	
-EO	End Outlet		**485.00**
-G	Galvanized CI	**825.00**	**825.00**
-M	Ductile Iron Grate	**915.00**	**915.00**
-NBHP	Heelproof, add to CI	**2,249.00**	**2,249.00**
-PBHP	Heelproof, add to CI	**2,054.00**	**2,054.00**
-U	Vandal Proof Screws	**308.00**	**308.00**
-VCI	Backwater Valve, CI	**1,205.00**	
-VG	Backwater Valve, Galv. CI	**1,592.00**	

NOTE: The above option prices are per section.

Fig. 2710 ....."A" Section
Fig. 2711 ....."A" Section.....with (1) "B" Section
Fig. 2712 ....."A" Section.....with (2) "B" Sections
Fig. 2713 ....."A" Section.....with (3) "B" Sections
Fig. 2714 ....."A" Section.....with (4) "B" Sections
Fig. 2715 ....."A" Section.....with (5) "B" Sections
Fig. 2716 ....."A" Section.....with (6) "B" Sections
Fig. 2717 ....."A" Section.....with (7) "B" Sections
Fig. 2718 ....."A" Section.....with (8) "B" Sections
Fig. 2719 ....."A" Section.....with (9) "B" Sections
Fig. 2720 ....."A" Section.....with (10) "B" Sections

FIG. 2810 NARROW HEAVY DUTY MODULAR TRENCH DRAIN

FUNCTION: Used in ramps, loading areas and as a continuous perimeter drain.

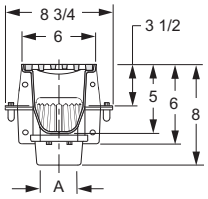

End Section View

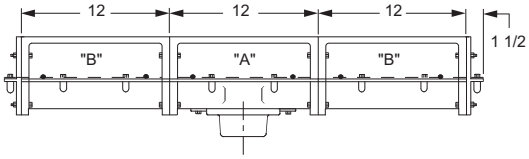

A OUTLET SIZE	TOP SIZE	FREE AREA SQ IN (EACH SECTION)	†DUCO CI	DUCO CI PB TOP	DUCO CI NB TOP	APPROX. WEIGHT LBS
02, 03, 04"	6 x 12"	16	**1,329.00**	**2,833.00**	**2,997.00**	51
Ea Add'l 12" Section			**1,329.00**	**2,833.00**	**2,997.00**	43

REGULARLY FURNISHED: Duco Cast Iron Flanged Body Outlet Section "A" and Flanged End Plates with Cast Iron Anti-Shift Loose Set Square Hole Grate, Dome Bottom Strainer.

OUTLET VARIATIONS (Specify type of outlet and pipe size in inches.)

Outlet Type	Outlet Designation Outlet Type/Pipe Size	ADD
Inside Caulk	C02, C03, C04	**N/C**
Threaded	T02, T03, T04	**99.00**
No-Hub	Y02, Y03, Y04	**N/C**

OPTIONS:

		ADD "A" (Outlet) Per Section	ADD "B" (Add'l) Per Section
-ARIO	ARC In and Out	**983.00**	**983.00**
-B	Bucket	**370.00**	
-EO	End Outlet		**485.00**
-C	Flashing Clamp	**202.00**	**202.00**
-G	Galvanized CI	**411.00**	**411.00**
-M	Ductile Iron Grate	**414.00**	**414.00**
-SG	Slotted CI Grate	**N/C**	**N/C**
-U	Vandal Proof Screws	**442.00**	**442.00**

NOTE: The above option prices are per section.

Fig. 2810 ....."A" Section
Fig. 2811 ....."A" Section.....with (1) "B" Section
Fig. 2812 ....."A" Section.....with (2) "B" Sections
Fig. 2813 ....."A" Section.....with (3) "B" Sections
Fig. 2814 ....."A" Section.....with (4) "B" Sections
Fig. 2815 ....."A" Section.....with (5) "B" Sections
Fig. 2816 ....."A" Section.....with (6) "B" Sections
Fig. 2817 ....."A" Section.....with (7) "B" Sections
Fig. 2818 ....."A" Section.....with (8) "B" Sections
Fig. 2819 ....."A" Section.....with (9) "B" Sections
Fig. 2820 ....."A" Section.....with (10) "B" Sections

†REGULARLY FURNISHED

FIG. 2900 SERIES DECORATIVE TRENCH GRATING LAID IN LONG DIMENSION

FUNCTION: Decorative grating with frame offers an attractive appearance for drainage at building entrances, garden areas or for perimeter drainage of fountains. Recommended for very light or pedestrian traffic.

OPTIONS:		ADD
-U	Vandal Proof (per grate)	368.00

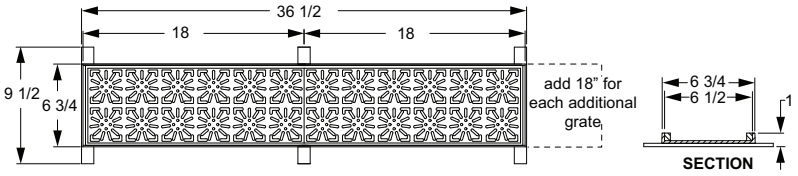

Fig. 2902 SHOWN

GRATE MATERIAL	GRATE SIZE	SINGLE GRATE FREE AREA SQ IN	2900 GRATE ONLY	2901 GRATE w/FRAME	2902 2 GRATES w/FRAME	*ADD'L GRATE & FRAME
RB Rough Bronze	6 x 18"	29.5	**1,292.00**	**2,322.00**	**4,466.00**	**2,137.00**
PB Polished Bronze	6 x 18"	29.5	**1,397.00**	**2,533.00**	**4,835.00**	**2,300.00**
NB Nickel Bronze	6 x 18"	29.5	**1,571.00**	**2,830.00**	**5,401.00**	**2,573.00**
Approx. Wt. Lbs.			12	15	32	15(ea)

*This applies to continuous runs of frame & grates only.

Fig. 2900 .....1 Grate Only - 6 1/2 x 18
Fig. 2901 .....1 Grate with Frame - 6 3/4 x 18 1/2
Fig. 2902 .....2 Grates with Frame - 6 3/4 x 36 1/2

NOTE: When ordering, last digit designates number of grates (if more than 9 grates - specify total number of grates and overall length.

REGULARLY FURNISHED: Polished Nickel Bronze Grate and Stainless Steel Frame.

FIG. 2910 SERIES LIGHT DUTY TRENCH GRATING LAID IN LONG DIMENSION

FUNCTION: Light duty grating and frame provide large free drainage area combined with the versatility of continuous grate sections in overall lengths to suit job conditions. The grates are designed for areas where there is pedestrian traffic only.

OPTIONS:		ADD
-U	Vandal Proof Screws, (per grate)	607.00
	Add to cut Grate	365.00

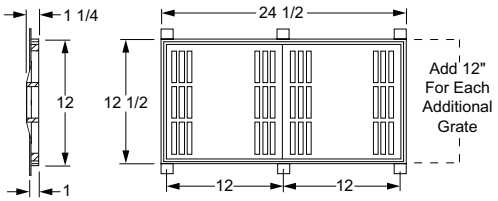

*This applies to continuous runs of frame & grates only.

Fig. 2910 .....1 Grate Only - 12 x 12
Fig. 2911 .....1 Grate with Frame - 12 1/2 x 12 1/2
Fig. 2912 .....2 Grates with Frame - 12 1/2 x 24 1/2

NOTE: When ordering, last digit designates number of grates (if more than 9 grates - specify total number of grates and overall length.

GRATE MATERIAL	GRATE SIZE	SINGLE GRATE FREE AREA SQ IN	2910 GRATE ONLY	2911 GRATE w/FRAME	2912 2 GRATES w/FRAME	*ADD'L GRATE & FRAME
CI Duco Cast Iron†	12 x 12"	61.5	**467.00**	**1,257.00**	**1,940.00**	**683.00**
G Galvanized CI	12 x 12"	61.5	**673.00**	**1,580.00**	**2,591.00**	**966.00**
RB Rough Bronze	12 x 12"	61.5	**1,353.00**	**2,441.00**	**4,309.00**	**1,865.00**
PB Polished Bronze	12 x 12"	61.5	**1,588.00**	**2,719.00**	**4,866.00**	**2,148.00**
NB Nickel Bronze	12 x 12"	61.5	**1,736.00**	**3,000.00**	**5,427.00**	**2,421.00**
Approx. Wt. Lbs.			18	34	68	34(ea)
ADD FOR: M Ductile Iron	12 x 12"		**812.00**	**812.00**	**1,617.00**	**812.00**

REGULARLY FURNISHED: Duco Cast Iron Grate with Steel Frame.

†REGULARLY FURNISHED

FIG. 2920 SERIES LIGHT DUTY TRENCH GRATING LAID IN WIDE DIMENSION

FUNCTION: Light duty grating and frame provide large free drainage area combined with the versatility of continuous grate sections in overall lengths to suit job conditions. The grates are designed for areas where there is pedestrian traffic only.

OPTIONS:		ADD
-U	Vandal Proof Screws, (per grate)	607.00
	Add to cut Grate	365.00

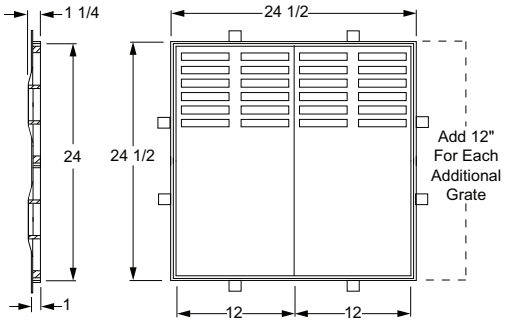

GRATE MATERIAL		GRATE SIZE	SINGLE GRATE FREE AREA SQ IN	2922 2 GRATES w/FRAME	2923 3 GRATES w/FRAME	2924 4 GRATES w/FRAME	*ADD'L GRATE & FRAME
CI	Duco Cast Iron†	12 x 24"	69.5	**3,558.00**	**4,736.00**	**5,917.00**	**1,179.00**
G	Galvanized CI	12 x 24"	69.5	**4,620.00**	**6,330.00**	**8,038.00**	**1,712.00**
RB	Rough Bronze	12 x 24"	69.5	**8,676.00**	**12,478.00**	**16,282.00**	**3,803.00**
PB	Polished Bronze	12 x 24"	69.5	**9,952.00**	**14,455.00**	**18,958.00**	**4,504.00**
NB	Nickel Bronze	12 x 24"	69.5	**10,809.00**	**15,620.00**	**20,430.00**	**4,810.00**
Approx. Wt. Lbs.				69	98	132	34(ea)
ADD FOR:							
M	Ductile Iron	12 x 24"		**3,224.00**	**4,836.00**	**6,447.00**	**1,612.00**

*This applies to continuous runs of frame & grates only.

Fig. 2922 .....2 Grates with Frame - 24 1/2 x 24 1/2
Fig. 2923 .....3 Grates with Frame - 24 1/2 x 36 1/2
Fig. 2924 .....4 Grates with Frame - 24 1/2 x 48 1/2

NOTE: When ordering, last digit designates number of grates (if more than 9 grates - specify total number of grates and overall length.

REGULARLY FURNISHED: Duco Cast Iron Grate with Steel Frame.

FIG. 2940 SERIES MEDIUM DUTY TRENCH GRATING LAID IN LONG DIMENSION

FUNCTION: Medium duty grating and frame provide large free drainage area combined with the versatility of continuous grate sections in overall lengths to suit job conditions. The grates are designed for areas where there is pedestrian traffic only.

OPTIONS:		ADD
-U	Vandal Proof Screws, (per grate)	607.00
	Add to cut Grate	365.00

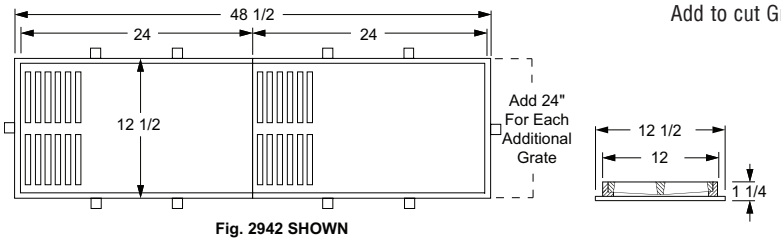

Fig. 2942 SHOWN

*This applies to continuous runs of frame & grates only.

Fig. 2940 .....1 Grate Only - 12 x 24
Fig. 2941 .....1 Grate with Frame - 12 1/2 x 24 1/2
Fig. 2942 .....2 Grates with Frame - 12 1/2 x 48 1/2

NOTE: When ordering, last digit designates number of grates (if more than 9 grates - specify total number of grates and overall length.

GRATE MATERIAL		GRATE SIZE	SINGLE GRATE FREE AREA SQ IN	2940 GRATE ONLY	2941 GRATE w/FRAME	2942 2 GRATES w/FRAME	*ADD'L GRATE & FRAME
CI	Duco Cast Iron†	12 x 24"	69.5	**930.00**	**2,525.00**	**3,893.00**	**1,369.00**
G	Galvanized CI	12 x 24"	69.5	**2,697.00**	**4,292.00**	**7,610.00**	**3,321.00**
RB	Rough Bronze	12 x 24"	69.5	**3,477.00**	**6,178.00**	**10,227.00**	**4,051.00**
PB	Polished Bronze	12 x 24"	69.5	**4,163.00**	**7,062.00**	**11,930.00**	**4,869.00**
NB	Nickel Bronze	12 x 24"	69.5	**4,415.00**	**7,529.00**	**12,784.00**	**5,251.00**
Approx. Wt. Lbs.				69	98	132	34(ea)
ADD FOR:							
M	Ductile Iron	12 x 24"		**1,612.00**	**1,612.00**	**3,224.00**	**1,612.00**

REGULARLY FURNISHED: Duco Cast Iron Grate with Steel Frame.

†REGULARLY FURNISHED

FIG. 2950 SERIES MEDIUM DUTY TRENCH GRATING LAID IN WIDE DIMENSION

FUNCTION: Medium duty grating and frame provide large free drainage area combined with the versatility of continuous grate sections in overall lengths to suit job conditions. The grates are designed for areas where there is pedestrian traffic only.

OPTIONS: **ADD**

-U Vandal Proof Screws, (per grate) **607.00**

Add to cut Grate **365.00**

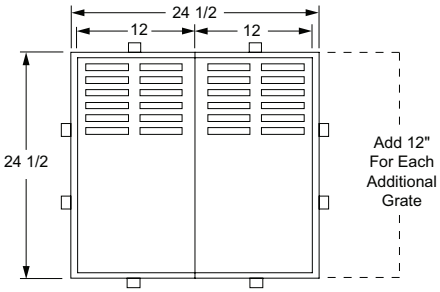

Fig. 2952 SHOWN

GRATE MATERIAL		GRATE SIZE	SINGLE GRATE FREE AREA SQ IN	2952 2 GRATES w/FRAME	2953 3 GRATES w/FRAME	2954 4 GRATES w/FRAME	*ADD'L GRATE & FRAME
CI	Duco Cast Iron†	12 x 24"	69.5	**4,656.00**	**6,794.00**	**8,932.00**	**2,137.00**
G	Galvanized CI	12 x 24"	69.5	**7,765.00**	**12,084.00**	**15,146.00**	**3,689.00**
RB	Rough Bronze	12 x 24"	69.5	**12,132.00**	**18,086.00**	**24,045.00**	**5,955.00**
PB	Polished Bronze	12 x 24"	69.5	**14,010.00**	**20,950.00**	**27,890.00**	**6,940.00**
NB	Nickel Bronze	12 x 24"	69.5	**15,080.00**	**22,630.00**	**30,180.00**	**7,550.00**
Approx. Wt. Lbs.				69	98	132	34(ea)
ADD FOR:							
M	Ductile Iron	12 x 24"		**3,224.00**	**4,835.00**	**6,447.00**	**1,612.00**

REGULARLY FURNISHED: Duco Cast Iron Grate with Steel Frame.

*This applies to continuous runs of frame & grates only.

Fig. 2952 .....2 Grates with Frame - 24 1/2 x 24 1/2
Fig. 2953 .....3 Grates with Frame - 24 1/2 x 36 1/2
Fig. 2954 .....4 Grates with Frame - 24 1/2 x 48 1/2

NOTE: When ordering, last digit designates number of grates (if more than 9 grates - specify total number of grates and overall length.

FIG. 2970 SERIES HEAVY DUTY TRENCH GRATING LAID IN LONG DIMENSION

FUNCTION: Heavy duty grating and frame provide large free drainage area combined with the versatility of continuous grate sections in overall lengths to suit job conditions. Grates are designed for areas where heavy trucks and traffic are encountered. Grates laid in wide dimensions for medium use only.

OPTIONS: **ADD**

-U Vandal Proof Screws, (per grate) **607.00**

Add to cut Grate **465.00**

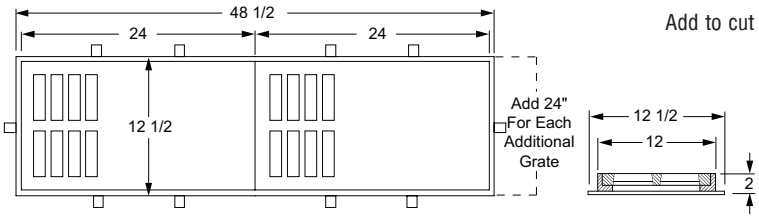

*This applies to continuous runs of frame & grates only.

Fig. 2970 .....1 Grate only - 12 x 24
Fig. 2971 .....1 Grate with Frame - 12 1/2 x 24 1/2
Fig. 2972 .....2 Grates with Frame - 12 1/2 x 48 1/2

NOTE: When ordering, last digit designates number of grates (if more than 9 grates - specify total number of grates and overall length.

GRATE MATERIAL		GRATE SIZE	SINGLE GRATE FREE AREA SQ IN	2970 GRATE ONLY	2971 GRATE w/FRAME	2972 2 GRATES w/FRAME	*ADD'L GRATE & FRAME
CI	Duco Cast Iron†	12 x 24"	123	**1,639.00**	**3,402.00**	**5,932.00**	**2,530.00**
G	Galvanized CI	12 x 24"	123	**3,620.00**	**5,383.00**	**9,652.00**	**4,271.00**
RB	Rough Bronze	12 x 24"	123	**5,658.00**	**9,800.00**	**17,484.00**	**7,686.00**
PB	Polished Bronze	12 x 24"	123	**6,532.00**	**10,705.00**	**19,955.00**	**9,249.00**
NB	Nickel Bronze	12 x 24"	123	**6,941.00**	**11,722.00**	**21,643.00**	**9,921.00**
Approx. Wt. Lbs.				69	98	132	34(ea)
ADD FOR:							
M	Ductile Iron	12 x 24"		**1,743.00**	**1,743.00**	**3,485.00**	**1,743.00**

REGULARLY FURNISHED: Duco Cast Iron Grate with Steel Frame.

†REGULARLY FURNISHED

FIG. 2980 SERIES HEAVY DUTY TRENCH GRATING LAID IN WIDE DIMENSION

FUNCTION: Heavy duty grating and frame provide large free drainage area combined with the versatility of continuous grate sections in overall lengths to suit job conditions. Grates are designed for areas where heavy trucks and traffic are encountered. Grates laid in wide dimensions for medium use only.

OPTIONS: **ADD**

-U Vandal Proof Screws, (per grate) **1,206.00**

Add to cut Grate **465.00**

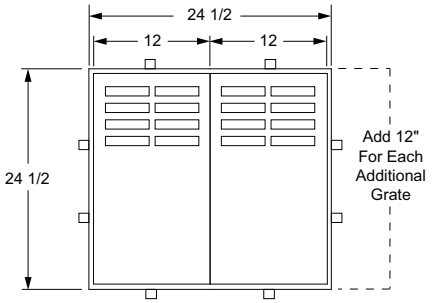

*This applies to continuous runs of frame & grates only.

Fig. 2982 .....2 Grates with Frame - 24 1/2 x 24 1/2
Fig. 2983 .....3 Grates with Frame - 24 1/2 x 36 1/2
Fig. 2984 .....4 Grates with Frame - 24 1/2 x 48 1/2

NOTE: When ordering, last digit designates number of grates (if more than 9 grates - specify total number of grates and overall length.

GRATE MATERIAL		GRATE SIZE	SINGLE GRATE FREE AREA SQ IN	2982 2 GRATES w/FRAME	2983 3 GRATES w/FRAME	2984 4 GRATES w/FRAME	*ADD'L GRATE & FRAME
CI	Duco Cast Iron†	12 x 24"	123	**4,939.00**	**7,084.00**	**9,232.00**	**2,149.00**
G	Galvanized CI	12 x 24"	123	**8,659.00**	**13,020.00**	**17,158.00**	**4,426.00**
RB	Rough Bronze	12 x 24"	123	**14,754.00**	**20,887.00**	**27,028.00**	**6,137.00**
PB	Polished Bronze	12 x 24"	123	**16,976.00**	**24,165.00**	**31,354.00**	**7,190.00**
NB	Nickel Bronze	12 x 24"	123	**18,514.00**	**26,292.00**	**34,071.00**	**7,779.00**
	Approx. Wt. Lbs.			69	98	132	34(ea)
ADD FOR:							
M	Ductile Iron	12 x 24"	123	**3,485.00**	**5,228.00**	**6,970.00**	**1,743.00**

REGULARLY FURNISHED: Duco Cast Iron Grate with Steel Frame.

†REGULARLY FURNISHED

SANITARY FLOOR, AREA & INDIRECT WASTE DRAINS

STAINLESS STEEL SANI-CEPTOR®

Fig. 3001

Fig. DX3001

Fig. 3001NB

SANI-CEPTOR® WITH NICKEL BRONZE TOPS

Fig. 3020

Fig. DX3027

Fig. 3030

Fig. 3040

Fig. 3060

Fig. DX3068

Fig. 3100

Fig. 3110

Fig. 3140

Fig. 3200

Fig. 3250

Fig. 3300

Fig. 3320

Fig. 3365

Fig. 3371

Fig. 3380

Fig. 3385

Fig. 3402

Fig. 3410

Fig. 3420

Fig. 3450

Fig. 3460

Fig. 3470

Fig. 3482

OPTIONAL TOP GRATES AND COVERS FOR INDIRECT WASTE APPLICATIONS

SUFFIX -11
With Rim Less Grate

SUFFIX -12
1/2 Grate

SUFFIX -13
3/4 Grate

SUFFIX -14
Grate/Center Hole

SUFFIX -15
w/Aluminum Recessed Grate

SUFFIX -18
Angle Grate

SUFFIX -19
NB Rim/Hinged Grate

SUFFIX -21
Grate w/4" Dia. Funnel

SUFFIX -22
Grate w/6" Dia. Funnel

SUFFIX -25
Grate 8 1/4 x 3 1/4 x 4 1/2
Oval Funnel

SUFFIX -26
Grate 6 x 2 1/2 x 1
Oval Funnel

SUFFIX -41
Solid Cover

SANITARY FLOOR, AREA & INDIRECT WASTE DRAINS

Fig. 3510

Fig. 3515

Fig. 3520

Fig. 3530

Fig. 3540

SUFFIX -F13

SUFFIX -F20

SUFFIX -F25

SUFFIX -F30

SUFFIX -F37

SUFFIX -F40

Fig. 3580

Fig. 3581

Fig. 3590

Fig. 3591

Fig. 3610

Fig. 3620

Fig. 3650

Fig. 3660

Fig. 3710

Fig. 3720

Fig. 3750

Fig. 3760

FUNNELS

Fig. 3810

Fig. 3820

FIXED AIR GAPS

Fig. 3950

Fig. 3951

"ROOF-CEPTORS"®

Fig. 3960

Fig. 3980

3000 SERIES

After identifying the proper options required to meet the engineering specification, place order as shown below:

Examples:

3120C04 (-FBS-C-U-12)

- Figure No.
- Type of Outlet (Caulk)
- Pipe Size (Inches)
- Aluminum Flat Bottom Strainer
- Flashing Clamp
- Vandal Proof
- With NB Rim and 1/2 Grate

*All variation suffixes are to be shown in parenthesis.

Drain Outlet Types:

C Caulk Outlet
T Threaded Outlet
Y NO-HUB Outlet
L Speedi-Set Service Weight
(02, 03 & 04" sizes only)
LXH Speedi-Set Extra Heavy
(02, 03 & 04" sizes only)
BW Butt Weld Outlet
(Specify Schedule -5, -10 or -40)
Example: 3001BW04 (-40)

Example: Pipe Size (Inches)

02 - 2"
03 - 3"
04 - 4"
etc.

PLUMBING CODE REQUIREMENTS

Indirect waste pipe is defined as a pipe that does not connect directly to the waste system but conveys liquid waste by discharging into a plumbing fixture (indirect waste receptor, floor sink, or similar code approved fixture) which is directly connected to the waste system. This installation provides an air gap which prevents contamination of food handling and other equipment required by code to be indirectly connected. Most code authorities require the receptor to have smooth, easy to clean corrosion-resistant interior surfaces. **Regular floor or hopper drains do not conform to these requirements because they have rough interiors with pockets and crevices which can harbor dirt and bacteria. These unsanitary conditions can spread disease, create unpleasant odors, and endanger human lives.**

SMITH DEVELOPMENT

In the early 1960's, Smith developed a complete line of **Sanitary Indirect Waste Receptor Drains** for installation in non-traffic areas. The interiors of the receptors had large radius corners, were ground smooth, and had an acid resistant coating applied making them easy to clean. A full line of dome strainers, sediment buckets, partial grates, covers, and funnels was developed. **There was a Smith Sanitary Indirect Waste Receptor Drain for every need. All conformed to the requirements of the most demanding plumbing codes.**

Fig. 1

A view of the acid resistant coating facility located in the modern Smith factory

A demand developed for these Sanitary Indirect Waste Receptor Drains to be installed in traffic areas. Smith responded with a complementary line of **Sanitary Floor and Area Drains.** Hundreds of thousands of these sanitary drains have been installed throughout the nation and in many foreign countries. This success led to the trademarked brand names **Sani-Ceptor®, Funnel-Ceptor®** and **Roof-Ceptor®** to identify the expanded product lines.

Through the years, Smith has found a growing need for an even more rugged, durable and corrosion-resistant *SANI-CEPTOR®.* Again leading the way, **Smith engineers have developed a STAINLESS STEEL SANI-CEPTOR®.** Today there is a body type and size available for every requirement and a top design for every need. **This wide selection, coupled with the Smith catalog numbering system, permits the specifier to "custom design" the SANI-CEPTOR® to suit the individual needs of the particular application at mass production costs.**

SANI-CEPTOR® USAGE

SANI-CEPTORS used as **sanitary indirect waste receptors** are required by modern plumbing codes in buildings where food is handled or processed such as restaurants, cafeterias, food markets and food processing plants. SANI-CEPTORS used as **sanitary floor and area drains** are essential in locations where human life could be endangered due to lack of sanitation such as hospitals, nursing and convalescent homes, clinic rooms and laboratories; also food processing plants such as dairies, creameries and breweries. These vital areas must be kept absolutely clean because the function which they serve is connected with the health and well-being of people. **When sanitation, durability and longevity are considered,SANI-CEPTORS® are the most cost effective drains for most applications.**

HOW TO SELECT A "SANI-CEPTOR"®

Analyze the requirements in the following categories:

- **Selection of Materials**
- **Selection of Receptor/Body**
- **Selection of Internal Strainers and Buckets**
- **Selection of Tops**
- **Selection of Special Application Items**

• Selection of Materials

Smith SANI-CEPTORS® are constructed in two basic types:

1) **14 Gauge type 304 stainless steel -SS body, SS internal strainers and buckets, and SS or Nickel Bronze tops.**

2) **Heavy cast iron body with acid resistant coated (A.R.C.) interior, aluminum internal strainers and buckets and nickel bronze or A.R.C. tops.**

Stainless steel SANI-CEPTORS® are seamless deep drawn and fabricated from 14 gauge type 304 stainless steel sheet. This heavy metal assures a rugged product. Type 304 SS is one of the most corrosion-resistant of the widely used stainless steels. For even greater corrosion resistance to certain chemicals, type 316 SS is offered as an optional material.

Strainers and Buckets for A.R.C. SANI-CEPTORS® are furnished in light weight corrosion resistant aluminum because dropping a heavy cast iron strainer or bucket could chip or damage the coating causing almost irreparable damage. **Stainless Steel** SANI-CEPTORS® are furnished with SS strainers and buckets. Since there is no coating to chip or damage, this potential problem is eliminated.

SS Tops or NB Rims and Grates are available for traffic areas and indirect waste applications. Both have excellent corrosion resistant qualities and are extremely serviceable where food waste and food acids are encountered. Neither will discolor like brass or bronze and both offer a "lasting" silver appearance. The polishing of a terrazzo floor and the "scuff-buff" action of foot traffic passing over a SS or NB top will actually add to its appearance. A.R.C. SANI-CEPTORS® are available with cast iron grates and tops for non-traffic areas.

NOTE: For additional Sanitary Floor, Area and Indirect Waste drain technical or application data go to our web site at www.jrsmith.com or contact your local Jay R. Smith Representative.

FIG. 3001 SERIES SANI-CEPTOR® SS FLOOR, AREA & INDIRECT WASTE DRAINS WITH SS SQUARE TOPS
FIG. 3001NB SERIES SANI-CEPTOR® SS FLOOR, AREA & INDIRECT WASTE DRAINS WITH NB SQUARE TOPS

FUNCTION: 3001-3009 Series: Used in all locations where superior sanitation, corrosion resistance, durability and longevity are required. Essential in restaurants, kitchens and all types of food handling areas for ultimate sanitation. Ideal for breweries, dairies, creameries and similar processing plants where sanitation is paramount. Also suitable for use in chemical plants, laboratories and other areas where the corrosion resistance of type 304 stainless steel is satisfactory for the intended service.

3001 SERIES

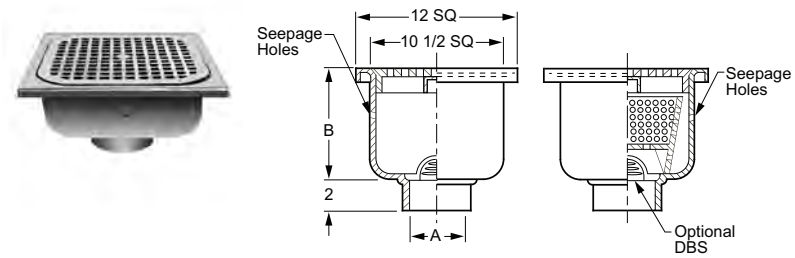

WITH DOME BOTTOM STRAINER **WITH SEDIMENT BUCKET**

REGULARLY FURNISHED:
3001 Series: 14 Gauge Type 304 SS Receptor Body with Seepage Control Holes, Cast Type 316 SS Ribbed Non-Tilt Loose Set Grate with 1/2" Square Holes. Perforated SS Dome Bottom Strainer or Sediment Bucket as indicated by Figure Number. Body Interior, Dome Bottom Strainer and Sediment Bucket are polished to No. 4 finish.

FUNCTION: 3001NB-3009NB Series: Used in all locations where superior sanitation, corrosion resistance, durability and longevity are required. Essential in restaurants, kitchens and all types of food handling areas for ultimate sanitation. Ideal for breweries, dairies, creameries and similar processing plants where sanitation is paramount.

3001 SERIES

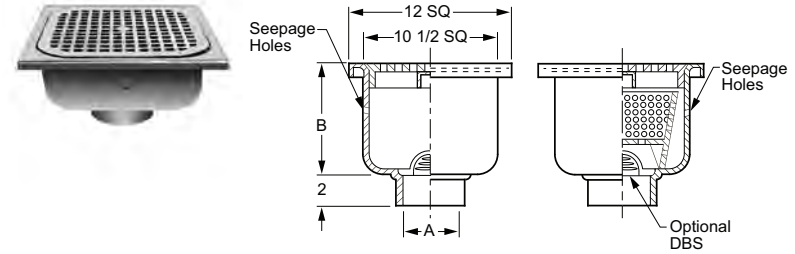

WITH DOME BOTTOM STRAINER **WITH SEDIMENT BUCKET**

REGULARLY FURNISHED:
3001NB Series: 14 Gauge Type 304 SS Receptor Body with Seepage Control Holes, 12 1/2" SQ NB Rim and Secured Ribbed Grate with 1/2" Square Holes. Perforated SS Dome Bottom Strainer or Sediment Bucket as indicated by Figure Number. Body Interior, Dome Bottom Strainer and Sediment Bucket are polished to No. 4 finish.

FIG. NO. w/DOME STRAINER	A OUTLET SIZE	B SUMP DEPTH	TOP SIZE	†LESS FLANGE	WITH FLANGE	APPROX. WEIGHT LBS
3001	02", 03", 04"	4"	12" SQ	**POA**	**POA**	14
3002	02", 03", 04"	6"	12" SQ	**POA**	**POA**	17
3003	02", 03", 04"	8"	12" SQ	**POA**	**POA**	20
3004	02", 03", 04"	10"	12" SQ	**POA**	**POA**	23
3001NB	02", 03", 04"	4"	12 1/2" SQ	**POA**	**POA**	18
3002NB	02", 03", 04"	6"	12 1/2" SQ	**POA**	**POA**	21
3003NB	02", 03", 04"	8"	12 1/2" SQ	**POA**	**POA**	24
3004NB	02", 03", 04"	10"	12 1/2" SQ	**POA**	**POA**	27
FIG. NO. SEDIMENT BUCKET	**A OUTLET SIZE**	**B SUMP DEPTH**	**TOP SIZE**	**†LESS FLANGE**	**WITH FLANGE**	**APPROX. WEIGHT LBS**
3006	02", 03", 04"	4"	12" SQ	**POA**	**POA**	16
3007	02", 03", 04"	6"	12" SQ	**POA**	**POA**	19
3008	02", 03", 04"	8"	12" SQ	**POA**	**POA**	22
3009	02", 03", 04"	10"	12" SQ	**POA**	**POA**	25
3006NB	02", 03", 04"	4"	12 1/2" SQ	**POA**	**POA**	20
3007NB	02", 03", 04"	6"	12 1/2" SQ	**POA**	**POA**	23
3008NB	02", 03", 04"	8"	12 1/2" SQ	**POA**	**POA**	26
3009NB	02", 03", 04"	10"	12 1/2" SQ	**POA**	**POA**	29

OUTLET VARIATIONS (Specify type of outlet and pipe size in inches.)

Outlet Type	Outlet Designation Outlet Type/Pipe Size	ADD
No-Hub	Y02, Y03, Y04	**POA**
Butt Weld	BW02, BW03, BW04 (Schedule -5)	**POA**
	BW02, BW03, BW04 (Schedule -10)	**POA**
	BW02, BW03, BW04 (Schedule -40)	**POA**

OPTIONS:		ADD
-P	Trap Primer Connection	**POA**
-U	Vandal Proof Grate	**POA**
-T	Male or Female Threaded Outlet	**POA**
-316	Type 316 Stainless Steel Bodies and Grates	**POA**
Anchor Flange (-F) Models:		
-C	Flashing Clamp (Type 304)	**POA**
-LSH	Less Seepage Control Holes	**POA**
Models w/Secured NB Grate:		
-U	Vandal Proof Grate	**POA**
Models w/Buckets:		
-BS	With Mesh lined Bucket	**POA**
-DBS	With Type 304 SS Dome Bottom Strainer	**POA**
-SBP	With Solid Bottom Ported Bucket	**POA**

MODELS WITH 12" STAINLESS STEEL TOPS (All Type 304- Type 316 POA)

		DEDUCT
-10	Less Stainless Steel Grate	**POA**
		ADD
-12	With Type 304 SS 1/2 Grate	**POA**
-13	With Type 304 SS 3/4 Grate	**POA**
-14	With Type 304 SS Grate with 2 1/2" SQ Center Hole	**POA**
-15	With Type 304 SS Recessed Grate with Bar Handle	**POA**
-21	With Type 304 SS Grate with 4" DIA NB Funnel	**POA**
-22	With Type 304 SS Grate with 6" DIA NB Funnel	**POA**
-25	With Type 304 SS Grate with 8 1/4 x 3 1/4 x 4 1/2" High Oval NB Funnel	**POA**
-26	With NB Grate With 6" x 2 1/2 x 1" High Oval NB Funnel	**POA**
-41	With Type 304 SS Solid Cover	**POA**
-42	With Type 304 SS 1/2 Solid Cover	**POA**
-43	With Type 304 SS 3/4 Solid Cover	**POA**
-44	With Type 304 SS Solid Cover w/2 1/2" SQ Center Hole	**POA**
-61	With Type 304 SS Heelproof Ribbed Loose-set Grate with 1/4" Square Holes	**POA**
-63	With Type 304 SS Medium Duty Ribbed Loose-set Non-tilt Grate with 1/4" Square Holes	**POA**
-64	With Type 304 SS Heavy Duty Ribbed Loose-set Non-tilt Grate with 1/2" Square Holes	**POA**
-66	With Type 304 SS Extra Heavy Duty Ribbed Loose-set Non-tilt Grate with 1/2" Square Holes	**POA**
-68	With Type 304 SS Extra Heavy Duty Ribbed Loose-set Non-tilt 3/4 Grate with 1/2" Square Holes	**POA**
-69	With 1" Thick Underbolted NB Rim and Extra Heavy Duty Cast Type 304 SS Secured Grate	**POA**

MODELS WITH 12 1/2" NICKEL BRONZE TOPS (SUFFIX NB)

		DEDUCT
-10	Less NB Rim and Grate	**POA**
-11	With NB Rim less Grate	**POA**
		ADD
-12	With NB Rim and 1/2 Grate	**POA**
-13	With NB Rim and 3/4" Grate	**POA**
-14	With NB Rim and Grate with 2 1/2" SQ Center Hole	**POA**
-15	With NB Rim and Aluminum Recessed Grate	**POA**
-18	With NB Rim and Angle Grate	**POA**
-19	With NB Rim and Hinged Grate	**POA**
-21	With NB Rim and Grate with 4" DIA NB Funnel	**POA**
-22	With NB Grate with 6" DIA NB Funnel	**POA**
-25	With NB Rim and Grate with 8 1/4 x 3 1/4 x 4 1/2 High Oval NB Funnel	**POA**
-26	With NB Rim and Grate with 6 x 2 1/2 x 1" High Oval NB Funnel	**POA**
-41	With NB Rim and Solid Cover	**POA**
-42	With NB Rim and 1/2 Solid Cover	**POA**
-43	With NB Rim and 3/4 Solid Cover	**POA**
-44	With NB Rim and 2 1/2" Dia Hole in Solid Cover	**POA**
-69	With 1" Thick Underbolted NB Rim and Extra Heavy Duty Secured Grate	**POA**

FIG. DX3001 SERIES SANI-CEPTOR® SS WIDE FLANGE FLOOR, AREA & INDIRECT WASTE DRAINS WITH SS SQUARE TOPS

FUNCTION: Used in all locations where superior sanitation, corrosion resistance, durability and longevity are required, and where the floor or deck will be surfaced with troweled, composition elastomeric covering. These coverings consist of slip sheet bondcoat, membrane and finish coatings. They form an entirely seamless waterproof, resilient traffic floor or deck. They are normally applied in 3/16" thickness, however, thicknesses may be increased to 1/2" for specialized application. Refer to covering manufacturer for specifications and thicknesses to be used.

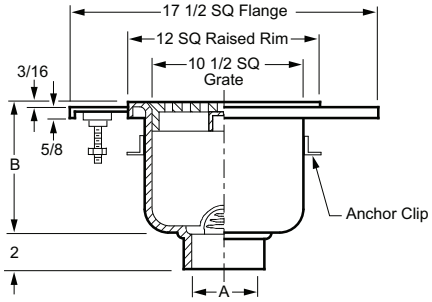

WITH DOME BOTTOM STRAINER

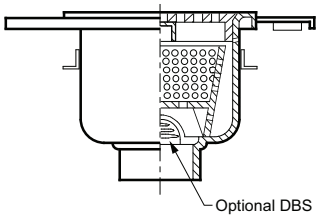

WITH SEDIMENT BUCKET

FIG. NO. w/DOME STRAINER	A OUTLET SIZE	B SUMP DEPTH	†SS SQUARE FLANGE	APPROX. WEIGHT LBS
DX3001	02", 03", 04"	4"	**POA**	29
DX3002	02", 03", 04"	6"	**POA**	32
DX3003	02", 03", 04"	8"	**POA**	35
DX3004	02", 03", 04"	10"	**POA**	38
FIG. NO. w/ SEDIMENT BUCKET	**A OUTLET SIZE**	**B SUMP DEPTH**	**†SS SQUARE FLANGE**	**APPROX. WEIGHT LBS**
DX3006	02", 03", 04"	4"	**POA**	29
DX3007	02", 03", 04"	6"	**POA**	32
DX3008	02", 03", 04"	8"	**POA**	35
DX3009	02", 03", 04"	10"	**POA**	38

REGULARLY FURNISHED: 14 Gauge Type 304 SS Receptor Body with Reinforced Stainless Steel Square Flange set 3/16" Below Rim and Cast Type 316 SS Ribbed Non-Tilt Loose Set Grate with 1/2" Square Holes. Flange has Glass Blast Finish for Bond Coat Adhesion and Countersunk Anchoring Holes. Body is Provided with Anchor Clips. Perforated SS Dome Bottom Strainer or Sediment Bucket is Indicated by Figure Number. Body Interior, Dome Bottom Strainer and Sediment Bucket are polished to No. 4 finish.

OUTLET VARIATIONS (Specify type of outlet and pipe size in inches.)

Outlet Type	Outlet Designation Outlet Type/Pipe Size	ADD
No-Hub	Y02, Y03, Y04	**POA**
Butt Weld	BW02, BW03, BW04 (Schedule -5)	**POA**
	BW02, BW03, BW04 (Schedule -10)	**POA**
	BW02, BW03, BW04 (Schedule -40)	**POA**

OPTIONS:		**ADD**
-AB	With 1/4 x 2 1/2 SS Anchor Bolts	**POA**
-AS	With 1/4 x 2 1/2 SS Anchor Screws	**POA**
-FT	With Flange Top set 3/8" or 1/2" Below Top of Rim and Grate	**POA**
-P	Trap Primer Connection	**POA**
-U	Vandal Proof Grate	**POA**
-SG	With Screed Guide	**POA**
-T	Male or Female Threaded Outlet	**POA**
-316	Type 316 Stainless Steel Bodies and Grates	**POA**
Anchor Flange (-F) Models:		
-C	Flashing Clamp (Type 304)	**POA**
-LSH	Less Seepage Control Holes	**POA**
Models w/Buckets:		
-BS	With Mesh lined Bucket	**POA**
-DBS	With Type 304 SS Dome Bottom Strainer	**POA**
-SBP	With Solid Bottom Ported Bucket	**POA**

MODELS WITH 12" STAINLESS STEEL TOPS (All Type 304- Type 316 POA)

		DEDUCT
-10	Less Stainless Steel Grate	**POA**
		ADD
-12	With Type 304 SS 1/2 Grate	**POA**
-13	With Type 304 SS 3/4 Grate	**POA**
-14	With Type 304 SS Grate with 2 1/2" SQ Center Hole	**POA**
-15	With Type 304 SS Recessed Grate with Bar Handle	**POA**
-21	With Type 304 SS Grate with 4" DIA NB Funnel	**POA**
-22	With Type 304 SS Grate with 6" DIA NB Funnel	**POA**
-25	With Type 304 SS Grate with 8 1/4 x 3 1/4 x 4 1/2" High Oval NB Funnel	**POA**
-26	With NB Grate With 6" x 2 1/2 x 1" High Oval NB Funnel	**POA**
-41	With Type 304 SS Solid Cover	**POA**
-42	With Type 304 SS 1/2 Solid Cover	**POA**
-43	With Type 304 SS 3/4 Solid Cover	**POA**
-44	With Type 304 SS Solid Cover w/2 1/2" SQ Center Hole	**POA**
-61	With Type 304 SS Heelproof Ribbed Loose-set Grate with 1/4" Square Holes	**POA**
-63	With Type 304 SS Medium Duty Ribbed Loose-set Non-tilt Grate with 1/4" Square Holes	**POA**
-64	With Type 304 SS Heavy Duty Ribbed Loose-set Non-tilt Grate with 1/2" Square Holes	**POA**
-66	With Type 304 SS Extra Heavy Duty Ribbed Loose-set Non-tilt Grate with 1/2" Square Holes	**POA**
-68	With Type 304 SS Extra Heavy Duty Ribbed Loose-set Non-tilt 3/4 Grate with 1/2" Square Holes	**POA**

FIG. 3020 SERIES SANI-CEPTOR® ARC FLOOR & INDIRECT WASTE DRAINS, SHALLOW RECEPTOR, ROUND NICKEL BRONZE TOP
FIG. 3030 SERIES SANI-CEPTOR® ARC FLOOR & INDIRECT WASTE DRAINS, SHALLOW RECEPTOR, ROUND NICKEL BRONZE TOP

FUNCTION: Used in kitchens, hospitals, food markets, restaurants, schools and all types of food handling areas where the ultimate in sanitation is desirable and a small capacity receptor is required.

3020 SERIES

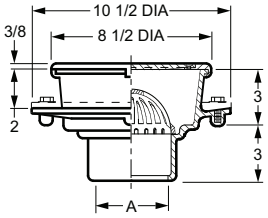

WITH DOME BOTTOM STRAINER

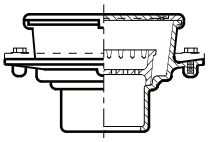

WITH SEDIMENT BUCKET

3030 SERIES

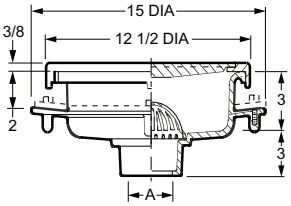

WITH DOME BOTTOM STRAINER

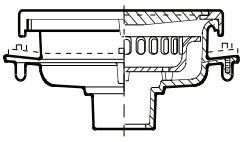

WITH SEDIMENT BUCKET

FIG. NO.	A OUTLET SIZE	TOP SIZE	FREE AREA SQ IN	†ALUMINUM DOME BOTTOM STRAINER	†ALUMINUM SEDIMENT BUCKET	APPROX. WEIGHT LBS
3020	02", 03", 04"	8 1/2"	17.35	**2,320.00**	-	15
3021	02", 03", 04"	8 1/2"	17.35	-	**2,605.00**	16
**3030	02", 03", 04"	12 1/2"	30	**3,384.00**	-	23
**3031	02", 03", 04"	12 1/2"	30	-	**3,792.00**	24

REGULARLY FURNISHED: Cast Iron Flanged Receptor with Seepage Holes, Acid Resistant Coated Interior, Nickel Bronze Rim and Secured Grate. Aluminum Dome Bottom Strainer or Sediment Bucket as Indicated by Figure Number.

OUTLET VARIATIONS (Specify type of outlet and pipe size in inches.)

Outlet Type	Outlet Designation Outlet Type/Pipe Size	ADD
Inside Caulk	C02, C03, C04	**N/C**
Speedi-Set Outlet SW	L02, L03, L04 (3020/3021 only)	**N/C**
Speedi-Set Outlet XH	LXH02, LXH03, LXH04 (3020/3021 only)	**N/C**
Speedi-Seal Gasket*	02, 03, 04	**73.00**
No-Hub**	Y02, Y03, Y04	**POA**

OPTIONS:		ADD 3020 SER.	ADD 3030 SER.
-C	Flashing Clamp	**238.00**	**251.00**
-DBSE	ARC Dome Bottom Strainer	**409.00**	**409.00**
-G	All Galvanized Receptor	**N/C**	**N/C**
-P	Trap Primer Connection	**246.00**	**246.00**
-PDBS	Polished Alum DBS	**73.00**	**73.00**
-U	Vandal Proof Screws	**98.00**	**98.00**
-12	W/NB Rim and 1/2 Grate	**N/C**	**N/C**
-13	W/NB Rim and 3/4 Grate	**N/C**	**N/C**
-14	W/NB Rim & Grate w/2 1/2 SQ Ctr Hole	**228.00**	**228.00**
-15	W/NB Rim and Alum Recessed Grate	**246.00**	**448.00**
-19	W/NB Rim and Hinged Grate	**448.00**	**448.00**
-21	W/NB Rim & Grate w/4" Dia NB Funnel	**545.00**	**545.00**
-22	W/NB Rim & Grate w/6" Dia NB Funnel	**811.00**	**811.00**
-25	W/NB Rim & Grate w/8 1/4 x 3 1/4 x 4 1/2 Oval NB Funnel	**1,128.00**	**1,128.00**
-26	W/NB Rim & Grate w/6 x 2 1/2 x 1 Oval NB Funnel	**545.00**	**545.00**
-41	W/NB Rim and Solid Cover	**215.00**	**293.00**
-42	W/NB Rim and 1/2 Solid Cover	**215.00**	**293.00**
-43	W/NB Rim and 3/4 Solid Cover	**215.00**	**293.00**
-44	W/NB Rim and Solid Cvr 2 1/2" Dia Ctr Hole	**442.00**	**516.00**
-51	W/Square NB Rim and NB Grate	**556.00**	**625.00**
			DEDUCT
-CI	Duco Cast Iron Receptor	**214.00**	**366.00**
-FBS	Aluminum Flat Bottom Strainer (Replaces DBS)	**28.00**	**28.00**
-10	Less NB Rim & Grate	**555.00**	**1,273.00**
-11	Less Grate, with NB Rim	**271.00**	**654.00**

*Speedi-Seal Gasket Available for use with 2, 3, or 4" Caulk Outlet Bodies as Indicated. Specify Service Weight (SW) or Extra Heavy (XH).
**For Fig. 3030 & 3031, when No-Hub outlet is specified, a Caulk Outlet w/9502 Speedi-Seal Gasket will be substituted.

FIG. DX3027 SANI-CEPTOR® ARC FLOOR & INDIRECT WASTE DRAINS, WIDE FLANGE, ROUND NICKEL BRONZE TOP

FUNCTION: Used in kitchen areas where waterproof traffic floor coverings are applied. The acid resistant coated interior makes it ideal for kitchens, hospitals and schools. "Safe-Set" design insures bucket replacement after cleaning since top grate cannot be inserted unless bucket is in place.

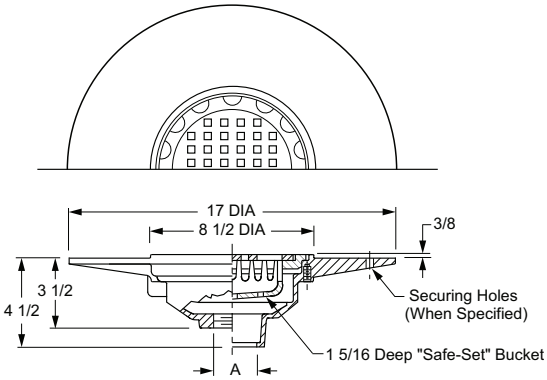

OUTLET VARIATIONS (Specify type of outlet and pipe size in inches.)

Outlet Type	Outlet Designation Outlet Type/Pipe Size	ADD
Inside Caulk	C02, C03, C04	**N/C**
Threaded	T02, T03, T04	**99.00**
No-Hub	Y02, Y03, Y04, Y05, Y06	**See Fig. 2646Y for list add to THREADED price**

OPTIONS:		ADD
-SH	Securing Holes	**156.00**
-U	Vandal Proof Screws	**73.00**
		DEDUCT
-LBGNB	Less NB Bucket & Grate	**123.00**
-LBGPB	Less PB Bucket & Grate	**108.00**

FIG. NO.	A OUTLET SIZE	TOP SIZE	FREE AREA SQ IN	PB TOP	†NB TOP	APPROX. WEIGHT LBS
DX3027	02", 03", 04"	8 1/2"	14.1	**1,986.00**	**2,226.00**	25

REGULARLY FURNISHED: Cast Iron Body with Acid Resistant Coated Interior and Nickel Bronze Top with Sediment Bucket.

†REGULARLY FURNISHED

FIG. 3038-DID FORMIT® DRAIN INSTALLATION DEVICE FOR 8 1/2" SQUARE ENAMELED FLOOR SINK SERIES

FUNCTION: The Jay R. Smith Mfg. Co.® FormIt® Drain Installation Device is designed to stabilize the drain and provide adjustment during the installation process and allows final connection of outlet piping to drain after the concrete pour.

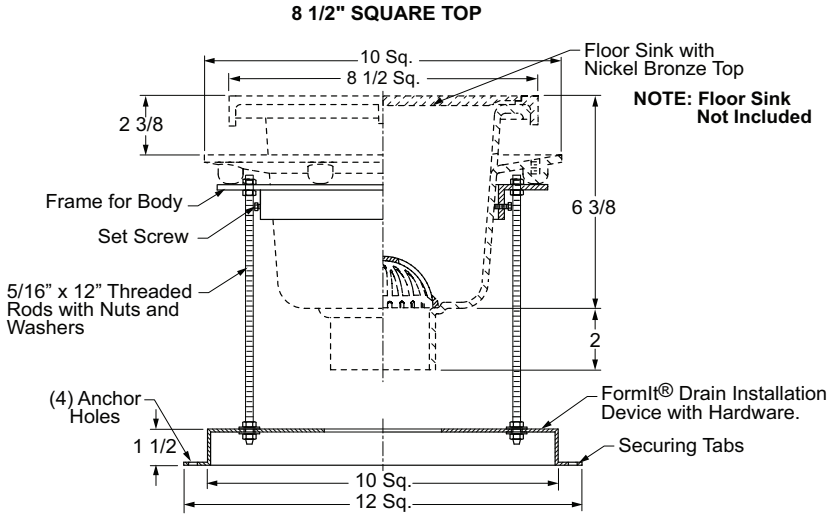

REGULARLY FURNISHED: FormIt® Drain Installation Device for 8 1/2" Square Enameled Floor Sink Series.

NOTE: Applies to Figure Numbers: 3040, 3100, 3101, 3410 & 3411. **For pricing, refer to appropriate Figure Number.**

FIG. 3039-DID FORMIT® DRAIN INSTALLATION DEVICE FOR 12" SQUARE ENAMELED FLOOR SINK SERIES

FUNCTION: The Jay R. Smith Mfg. Co.® FormIt® Drain Installation Device is designed to stabilize the drain and provide adjustment during the installation process and allows final connection of outlet piping to drain after the concrete pour.

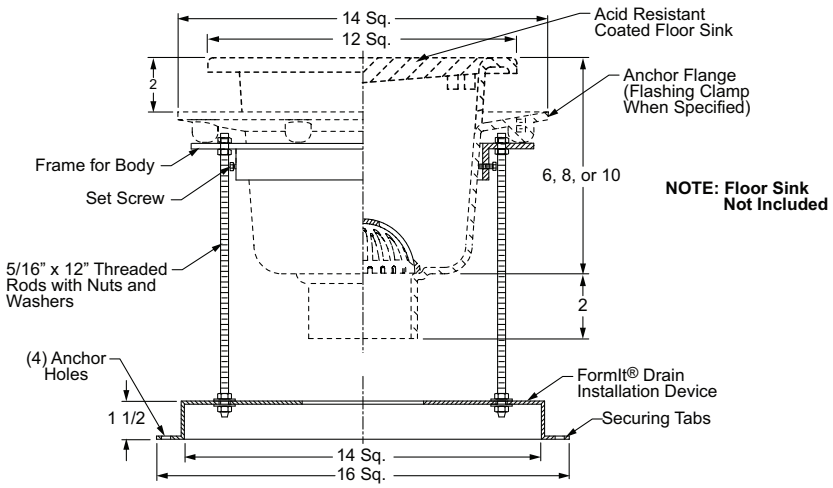

NOTE: Designed to be used with Smith 12" square top drains.

NOTE: Applies to Figure Numbers: 3060, 3110, 3111, 3120, 3121, 3130, 3131, 3140, 3141, 3150, 3151, 3160, 3161, 3400, 3420, 3421, 3430, 3431, 3440 & 3441. **For pricing, refer to appropriate Figure Number.**

REGULARLY FURNISHED: FormIt® Drain Installation Device for 12" Square Enameled Floor Sink Series.

†REGULARLY FURNISHED

FIG. DX3068 SANI-CEPTOR® ARC FLOOR & INDIRECT WASTE DRAINS, WIDE FLANGE, ROUND NICKEL BRONZE TOP

FUNCTION: Used in kitchen areas where waterproof traffic floor coverings are applied. The acid resistant coated interior makes it ideal for kitchens, hospitals and schools.

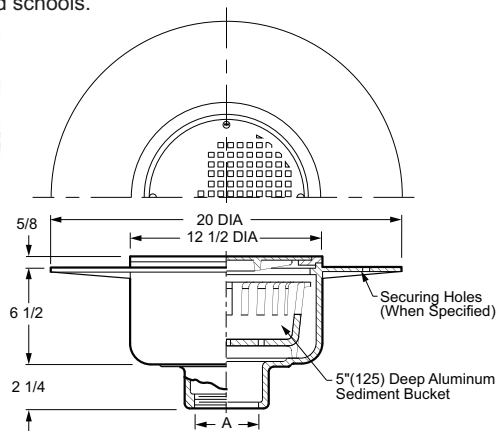

FIG. NO.	A OUTLET SIZE	TOP SIZE	FREE AREA SQ IN	PB TOP	†NB TOP	APPROX. WEIGHT LBS
DX3068	02", 03", 04"	12 1/2"	30	**3,764.00**	**4,254.00**	43
DX3068	05", 06"	12 1/2"	30	**3,764.00**	**4,254.00**	43

REGULARLY FURNISHED: Cast Iron Body with Acid Resistant Coated Interior and Nickel Bronze Top with Sediment Bucket.

OUTLET VARIATIONS (Specify type of outlet and pipe size in inches.)

Outlet Type	Outlet Designation Outlet Type/Pipe Size	ADD
Inside Caulk	C02, C03, C04, C05, C06	**N/C**
Threaded	T02, T03, T04	**99.00**
Speedi-Seal Gasket*	02, 03, 04	**73.00**
No-Hub	Y02, Y03, Y04, Y05, Y06	**See Fig. 2646Y for list add to THREADED body price**

OPTIONS:		ADD
-SH	Securing Holes	**156.00**
-U	Vandal Proof Screws	**73.00**
-12	W/NB Rim and 1/2 Grate	**N/C**
-16	W/NB Rim & Heelproof Grate	**1,278.00**
		DEDUCT
-11	Less Grate, with NB Rim	**654.00**

*Speedi-Seal Gasket Available for use with 2, 3, or 4" Caulk Outlet Bodies as Indicated. Specify Service Weight (SW) or Extra Heavy (XH).

IMPORTANT INSTALLATION NOTE

If water-proof deck covering thickness is greater (or less) than the dimension shown, the drain body should be set to compensate for the variation in thickness. Drain body should be set low enough to permit "dimpling" of area surrounding drain.

FIG. 3040 SERIES SANI-CEPTOR® ARC FLOOR & INDIRECT WASTE DRAINS, SHALLOW RECEPTOR, ROUND NICKEL BRONZE TOP
FIG. 3060 SERIES SANI-CEPTOR® ARC FLOOR & INDIRECT WASTE DRAINS, SHALLOW RECEPTOR, ROUND NICKEL BRONZE TOP

FUNCTION: Used in kitchens, hospitals, food markets, restaurants, schools and all types of food handling areas where the ultimate in sanitation is desirable and a small capacity receptor is required.

Fig. 3040

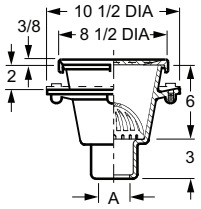

WITH DOME BOTTOM STRAINER

Fig. 3041

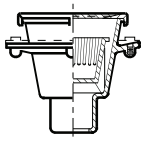

WITH SEDIMENT BUCKET

Fig. 3060

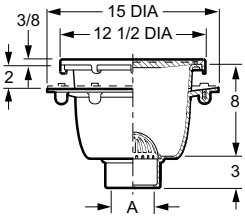

WITH DOME BOTTOM STRAINER

Fig. 3061

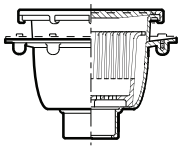

WITH SEDIMENT BUCKET

FIG. NO.	A OUTLET SIZE	TOP SIZE	FREE AREA SQ IN	†ALUMINUM DOME BOTTOM STRAINER	†ALUMINUM SEDIMENT BUCKET	APPROX. WEIGHT LBS
3040	02", 03", 04"	8 1/2"	17.35	**2,648.00**	-	22
3041	02", 03", 04"	8 1/2"	17.35	-	**2,940.00**	23
3060	02", 03", 04"	12 1/2"	30	**3,917.00**	-	35
3061	02", 03", 04"	12 1/2"	30	-	**4,324.00**	36

REGULARLY FURNISHED: Cast Iron Flanged Receptor with Seepage Holes, Acid Resistant Coated Interior, Nickel Bronze Rim and Secured Grate. Aluminum Dome Bottom Strainer or Sediment Bucket as Indicated by Figure Number.

OUTLET VARIATIONS (Specify type of outlet and pipe size in inches.)

Outlet Type	Outlet Designation Outlet Type/Pipe Size	ADD
Inside Caulk	C02, C03, C04	**N/C**
Speedi-Set Outlet SW	L02, L03, L04	**N/C**
Speedi-Set Outlet XH	LXH02, LXH03, LXH04	**N/C**
Speedi-Seal Gasket*	02, 03, 04	**73.00**
No-Hub	Y02, Y03, Y04	**N/C**

OPTIONS:		3040 SER.	3060 SER.
		ADD	
-C	Flashing Clamp	**238.00**	**251.00**
-DBSE	ARC Dome Bottom Strainer	**409.00**	**409.00**
-G	All Galvanized Receptor	**N/C**	**N/C**
-P	Trap Primer Connection	**246.00**	**246.00**
-PDBS	Polished Alum DBS	**73.00**	**73.00**
-U	Vandal Proof Screws	**98.00**	**98.00**
-12	W/NB Rim and 1/2 Grate	**N/C**	**N/C**
-13	W/NB Rim and 3/4 Grate	**N/C**	**N/C**
-14	W/NB Rim & Grate w/2 1/2 SQ Ctr Hole	**228.00**	**228.00**
-15	W/NB Rim and Alum Recessed Grate	**246.00**	**448.00**
-19	W/NB Rim and Hinged Grate	**448.00**	**448.00**
-21	W/NB Rim & Grate w/4" Dia NB Funnel	**545.00**	**545.00**
-22	W/NB Rim & Grate w/6" Dia NB Funnel	**811.00**	**811.00**
-25	W/NB Rim & Grate w/8 1/4 x 3 1/4 x 4 1/2 Oval NB Funnel	**1,128.00**	**1,128.00**
-26	W/NB Rim & Grate w/6 x 2 1/2 x 1 Oval NB Funnel	**545.00**	**545.00**
-41	W/NB Rim and Solid Cover	**215.00**	**293.00**
-42	W/NB Rim and 1/2 Solid Cover	**215.00**	**293.00**
-43	W/NB Rim and 3/4 Solid Cover	**215.00**	**293.00**
-44	W/NB Rim and 2 1/2" Dia Center Hole	**442.00**	**516.00**
-51	W/Square NB Rim and NB Grate	**556.00**	**625.00**
			DEDUCT
-CI	Duco Cast Iron Receptor	**214.00**	**366.00**
-FBS	Aluminum Flat Bottom Strainer (Replaces DBS)	**28.00**	**28.00**
-10	Less NB Rim & Grate	**555.00**	**1,273.00**
-11	Less Grate, with NB Rim	**271.00**	**654.00**
	Less Flange		
	For 3040, Specify 3045	**367.00**	
	For 3041, Specify 3046	**367.00**	
	For 3060, Specify 3065		**486.00**
	For 3061, Specify 3066		**486.00**

*Speedi-Seal Gasket Available for use with 2, 3, or 4" Caulk Outlet Bodies as Indicated. Specify Service Weight (SW) or Extra Heavy (XH).

†REGULARLY FURNISHED

FIG. 3100 SERIES SANI-CEPTOR® ARC FLOOR & INDIRECT WASTE DRAINS, MEDIUM RECEPTOR, SQ NB TOP
FIG. 3110, 3120, 3130 SERIES SANI-CEPTOR® ARC FLOOR & INDIRECT WASTE DRAINS, MEDIUM & DEEP RECEPTORS, SQ NB TOP

FUNCTION: 3100 Series: Used in kitchens, hospitals, food markets, restaurants, schools and all types of food handling areas where the ultimate in sanitation is desirable and a medium capacity receptor is required.

3100 SERIES

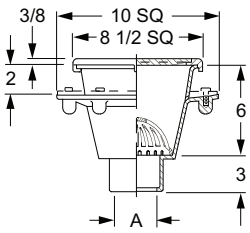

WITH DOME BOTTOM STRAINER

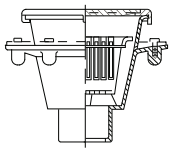

WITH SEDIMENT BUCKET

REGULARLY FURNISHED: Cast Iron Flanged Receptor with Seepage Holes, Acid Resistant Coated Interior, Nickel Bronze Rim and Secured Grate. Aluminum Dome Bottom Strainer or Plastic ABS Sediment Bucket as Indicated by Figure Number.

FIG. NO.	A OUTLET SIZE	TOP SIZE	FREE AREA SQ IN	†ALUMINUM DOME BOTTOM STRAINER	†ABS SEDIMENT BUCKET	APPROX. WEIGHT LBS
3100	02", 03", 04"	8 1/2"	19.43	**2,806.00**	-	22
3101	02", 03", 04"	8 1/2"	19.43	-	**3,060.00**	23

FUNCTION: 3110, 3120, 3130 Series: Used in creameries, dairies, breweries and other locations which utilize a quarry tile floor requiring a 3" flange to top dimension. The ported sediment bucket catches all solids yet provides ample drainage.

3110 SERIES

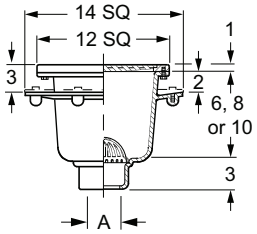

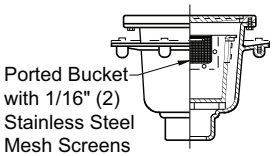

WITH DOME BOTTOM STRAINER

WITH SEDIMENT BUCKET

REGULARLY FURNISHED: Cast Iron Flanged Receptor with Seepage Holes, Acid Resistant Coated Interior, Nickel Bronze Rim and Secured Grate. Aluminum Dome Bottom Strainer or Sediment Bucket as Indicated by Figure Number.

FIG. NO.	A OUTLET SIZE	TOP SIZE	SUMP DEPTH	FREE AREA SQ IN	†ALUMINUM DOME BOTTOM STRAINER	†ALUMINUM SEDIMENT BUCKET	APPROX. WEIGHT LBS
3110	02", 03", 04"	12"	6	42	**4,551.00**	-	35
3111	02", 03", 04"	12"	6	42	-	**4,960.00**	36
3120	02", 03", 04"	12"	8	42	**4,696.00**	-	52
3121	02", 03", 04"	12"	8	42	-	**5,098.00**	55
3130	02", 03", 04"	12"	10	42	**4,846.00**	-	67
3131	02", 03", 04"	12"	10	42		**5,250.00**	71

OUTLET VARIATIONS (Specify type of outlet and pipe size in inches.)

Outlet Type	Outlet Designation Outlet Type/Pipe Size	ADD
Inside Caulk	C02, C03, C04	**N/C**
Speedi-Set Outlet SW	L02, L03, L04	**N/C**
Speedi-Set Outlet XH	LXH02, LXH03, LXH04	**N/C**
Speedi-Seal Gasket*	02, 03, 04	**73.00**
No-Hub	Y02, Y03, Y04	**N/C**

OPTIONS:

		3100 SERIES	ADD 3110/3120/3130 SERIES
-ASB	Alum Slotted Bucket (Bkt Models Only)	-	**N/C**
-BS	SS Mesh Lined Bkt (Bkt Models Only)	**607.00**	
-C	Flashing Clamp	**238.00**	**251.00**
-DBSE	ARC Dome Bottom Strainer	**409.00**	**409.00**
-DID	Drain Installation Device	**265.00**	**265.00**
-G	All Galvanized Receptor	**N/C**	**N/C**
-PDBS	Polished Alum DBS	**73.00**	**73.00**
-P	Trap Primer Connection	**246.00**	**246.00**
-SBP	Solid Bottom Ported Bucket w/Mesh Screen (Bucket Models Only)	-	**308.00**
-U	Vandal Proof Screws	**98.00**	**98.00**
-12	W/NB Rim and 1/2 Grate	**N/C**	**N/C**
-13	W/NB Rim and 3/4 Grate	**N/C**	**N/C**
-14	W/NB Rim & Grate w/2 1/2 SQ Ctr Hole	**228.00**	**228.00**
-15	W/NB Rim and Alum Recessed Grate	**246.00**	**448.00**
-18	W/NB Rim and Angle Grate	-	**1,526.00**
-19	W/NB Rim and Hinged Grate	**448.00**	**448.00**
-21	W/NB Rim & Grate w/4" Dia NB Funnel	**545.00**	**545.00**
-22	W/NB Rim & Grate w/6" Dia NB Funnel	**811.00**	**811.00**
-25	W/NB Rim & Grate w/8 1/4 x 3 1/4 x 4 1/2 Oval NB Funnel	**1,128.00**	**1,128.00**
-26	W/NB Rim & Grate w/6 x 2 1/2 x 1 Oval NB Funnel	**545.00**	**545.00**
-41	W/NB Rim and Solid Cover	**215.00**	**293.00**
-42	W/NB Rim and 1/2 Solid Cover	**215.00**	**293.00**
-43	W/NB Rim and 3/4 Solid Cover	**215.00**	**293.00**
-44	W/NB Rim and Solid Cvr 2 1/2" Dia Ctr Hole	**442.00**	**516.00**
-69	W/NB Rim and XH Stainless Steel Secured Grate (12") tops)	-	**3,022.00**
			DEDUCT
-CI	Duco Cast Iron Receptor	**214.00**	**366.00**
-FBS	Alum. Flat Bottom Strnr (Replaces DBS)	**28.00**	**28.00**
-10	Less NB Rim & Grate	**555.00**	**1,617.00**
-11	Less Grate, with NB Rim	**271.00**	**626.00**
	Less Flange	-	**492.00**

For 3120, Specify 3125 (Caulk outlet only)
For 3121, Specify 3126 (Caulk outlet only)

*Speedi-Seal Gasket Available for use with 2, 3, or 4" Caulk Outlet Bodies as Indicated. Specify Service Weight (SW) or Extra Heavy (XH).

†REGULARLY FURNISHED

FIG. 3140, 3150, 3160 SERIES SANI-CEPTOR® ARC FLOOR & INDIRECT WASTE DRAINS, MEDIUM, DEEP & EXTRA DEEP RECEPTORS, SQUARE NB TOP

FUNCTION: Used in kitchens, hospitals, food markets, restaurants, schools and all types of food handling areas where the ultimate in sanitation is desirable and a medium capacity receptor is required.

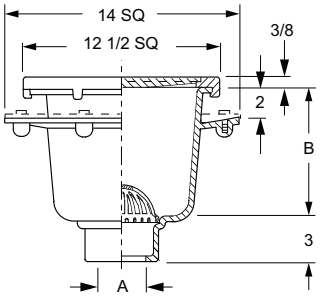

WITH DOME BOTTOM STRAINER

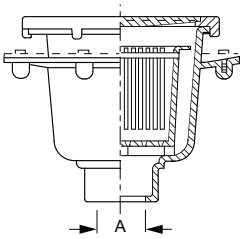

WITH SEDIMENT BUCKET

FIG. NO.	A OUTLET SIZE	TOP SIZE	SUMP DEPTH	FREE AREA SQ IN	†ALUMINUM DOME BOTTOM STRAINER	†ABS SEDIMENT BUCKET	APPROX. WEIGHT LBS
3140	02", 03", 04"	12 1/2"	6	42	**4,174.00**	-	50
3141	02", 03", 04"	12 1/2"	6	42	-	**4,585.00**	54
3150	02", 03", 04"	12 1/2"	8	42	**4,318.00**	-	54
3151	02", 03", 04"	12 1/2"	8	42	-	**4,726.00**	57
3160	02", 03", 04"	12 1/2"	10	42	**4,472.00**	-	59
3161	02", 03", 04"	12 1/2"	10	42	-	**4,881.00**	63

REGULARLY FURNISHED: Cast Iron Flanged Receptor with Seepage Holes, Acid Resistant Coated Interior, Nickel Bronze Rim and Secured Grate. Aluminum Dome Bottom Strainer or Plastic ABS Sediment Bucket as Indicated by Figure Number.

OUTLET VARIATIONS (Specify type of outlet and pipe size in inches.)

Outlet Type	Outlet Designation Outlet Type/Pipe Size	ADD
Inside Caulk	C02, C03, C04	**N/C**
Speedi-Set Outlet SW	L02, L03, L04	**N/C**
Speedi-Set Outlet XH	LXH02, LXH03, LXH04	**N/C**
Speedi-Seal Gasket*	02, 03, 04	**73.00**
No-Hub	Y02, Y03, Y04	**N/C**

OPTIONS:		ADD
-BS	SS Mesh Lined Bucket (Bucket Models Only)	**607.00**
-C	Flashing Clamp	**251.00**
-DBSE	ARC Dome Bottom Strainer	**409.00**
-DID	Drain Installation Device	**265.00**
-G	All Galvanized Receptor	**N/C**
-P	Trap Primer Connection	**246.00**
-PDBS	Polished Alum DBS	**73.00**
-SBP	Solid Bottom Ported Bkt w/SS mesh (Bucket Models Only)	**308.00**
-U	Vandal Proof Screws	**98.00**
-12	W/NB Rim and 1/2 Grate	**N/C**
-13	W/NB Rim and 3/4 Grate	**N/C**
-14	W/NB Rim & Grate w/2 1/2" SQ Hole (7" SQ. Center Hole on 16 1/2" Tops)	**228.00**
-15	W/NB Rim & Alum Recess Grate	**246.00**
-16	W/NB Rim & Heelproof Grate	**891.00**
-18	W/NB Rim & Angle Grate	**1,526.00**
-19	W/NB Rim and Hinged Grate	**448.00**
-21	W/NB Rim & Grate w/4" NB Funnel	**545.00**
-22	W/NB Rim & Grate w/6" NB Funnel	**811.00**
-25	W/NB Rim & Grate w/8 1/4 x 3 1/4 x 4 1/2 Oval NB Funnel	**1,128.00**
-26	W/NB Rim & Grate w/6 x 2 1/2 x 1 Oval NB Funnel	**545.00**
-41	W/NB Rim and Solid Cover	**293.00**
-42	W/NB Rim and 1/2 Solid Cover	**293.00**
-43	W/NB Rim and 3/4 Solid Cover	**293.00**
-44	W/NB Rim and Solid Cover 2 1/2" Dia Center Hole	**516.00**
-69	W/NB Rim and XH SS Secured Grate	**3,022.00**

		DEDUCT
-CI	Duco Cast Iron Receptor	**366.00**
-FBS	Aluminum Flat Bottom Strainer (Replaces DBS)	**28.00**
-10	Less NB Rim & Grate	**1,257.00**
-11	Less Grate, with NB Rim	**626.00**
	Less Flange	**492.00**

For 3150, Specify 3155 (Caulk outlet only)
For 3151, Specify 3156 (Caulk outlet only)

*Speedi-Seal Gasket Available for use with 2, 3, or 4" Caulk Outlet Bodies as Indicated. Specify Service Weight (SW) or Extra Heavy (XH).

†REGULARLY FURNISHED

FIG. 3200, 3250 SERIES SANI-CEPTOR® ARC FLOOR & INDIRECT WASTE DRAINS, EXTRA DEEP RECEPTORS, SQUARE & RECTANGULAR NB TOP

FUNCTION: Used in kitchens, schools, laundries and other commercial installations where a large volume of waste is anticipated and the ultimate in sanitation is desirable.

3200 SERIES

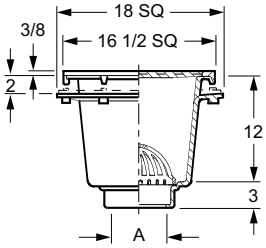

WITH DOME BOTTOM STRAINER

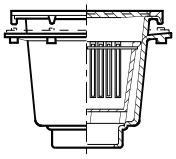

WITH SEDIMENT BUCKET

FIG. NO.	A OUTLET SIZE	TOP SIZE	FREE AREA SQ IN	†ALUMINUM DOME BOTTOM STRAINER	†ALUMINUM SEDIMENT BUCKET	APPROX. WEIGHT LBS
3200	02", 03", 04"	16 1/2"	77	**7,593.00**	-	83
3200	05", 06", 08"	16 1/2"	77	**7,593.00**	-	83
3201	02", 03", 04"	16 1/2"	77	-	**8,656.00**	87
3201	05", 06", 08"	16 1/2"	77	-	**8,656.00**	87

REGULARLY FURNISHED: 3200 Series: Cast Iron Flanged Receptor with Seepage Holes, Acid Resistant Coated Interior, Nickel Bronze Rim and Secured Grate. Aluminum Dome Bottom Strainer or Sediment Bucket as Indicated by Figure Number.

FUNCTION: Used in kitchens, schools, laundries and other commercial installations where a large volume of waste is anticipated and the ultimate in sanitation is desirable.

3250 SERIES

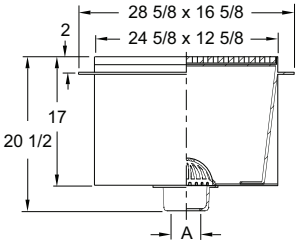

WITH DOME BOTTOM STRAINER

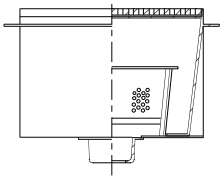

WITH SEDIMENT BUCKET

FIG. NO.	A OUTLET SIZE	TOP SIZE	FREE AREA SQ IN	†ARC CI DOME BOTTOM STRAINER	†STAINLESS STEEL SEDIMENT BUCKET	APPROX. WEIGHT LBS
3250	02", 03", 04"	24 x 12"	125	**15,619.00**	-	134
3250	05", 06"	24 x 12"	125	**15,619.00**	-	134
3251	02", 03", 04"	24 x 12"	125	-	**18,034.00**	134
3251	05", 06"	24 x 12"	125	-	**18,034.00**	134

REGULARLY FURNISHED: 3200 Series:
3250 Series: Fabricated Steel Flanged Receptor with Acid Resistant Coated Interior and Nickel Bronze Rim and Secured Grate. Acid Resistant Coated Dome Bottom Strainer or Stainless Steel Sediment Bucket as Indicated By Figure Number.

OUTLET VARIATIONS (Specify type of outlet and pipe size in inches.)

Outlet Type	Outlet Designation Outlet Type/Pipe Size	ADD
Inside Caulk	C02, C03, C04	**N/C**
	C05, C06, C08	**N/C**
Speedi-Seal Gasket*	02, 03, 04	**73.00**
No-Hub	Y03, Y04	**N/C**
	Y05, Y06 (3200 Ser. Only)	**N/C**

OPTIONS:

		3200 SERIES	ADD 3250 SERIES
-ASB	Aluminum Slotted Bucket (Bkt Models Only)	**N/C**	**N/C**
-BS	SS Mesh Lined Bkt (Bkt Models Only)	**1,205.00**	-
-C	Flashing Clamp	**724.00**	**724.00**
-DBSE	ARC Dome Bottom Strainer	**409.00**	-
-G	All Galvanized Receptor	**N/C**	**N/C**
-P	Trap Primer Connection	**246.00**	**485.00**
-PDBS	Polished Alum DBS	**73.00**	**73.00**
-U	Vandal Proof Screws	**98.00**	**98.00**
-12	W/NB Rim and 1/2 Grate	**N/C**	**N/C**
-13	W/NB Rim and 3/4 Grate	**N/C**	-
-14	W/NB Rim & Grate w/2 1/2" SQ Hole (7" SQ. Center Hole on 16 1/2" Tops)	**228.00**	-
-21	W/NB Rim & Grate w/4" NB Funnel	**545.00**	**545.00**
-22	W/NB Rim & Grate w/6" NB Funnel	**811.00**	**811.00**
-25	W/NB Rim & Grate w/8 1/4 x 3 1/4 x 4 1/2 Oval NB Funnel	**1,128.00**	**1,128.00**
-26	W/NB Rim & Grate w/6 x 2 1/2 x 1 Oval NB Funnel	**545.00**	**545.00**
-41	W/NB Rim and Solid Cover	**788.00**	-
-42	W/NB Rim and 1/2 Solid Cover	**788.00**	-
-43	W/NB Rim and 3/4 Solid Cover	**788.00**	-
-44	W/NB Rim & Solid Cvr 2 1/2" Dia Center Hole	**1,018.00**	-
			DEDUCT
-CI	Duco Cast Iron Receptor	**485.00**	-
-FBS	Aluminum Flat Bottom Strainer (Replaces DBS)	**28.00**	**28.00**
-10	Less NB Rim & Grate	**2,652.00**	**2,729.00**
-11	Less Grate, with NB Rim	**1,329.00**	**1,727.00**

*Speedi-Seal Gasket Available for use with 2, 3, or 4" Caulk Outlet Bodies as Indicated. Specify Service Weight (SW) or Extra Heavy (XH).

†REGULARLY FURNISHED

FIG. 3300 SERIES SANI-CEPTOR® ARC FLOOR & INDIRECT WASTE DRAINS, SHALLOW RECEPTOR, RECTANGULAR NB TOP
FIG. 3320 SERIES SANI-CEPTOR® ARC FLOOR & INDIRECT WASTE DRAINS, DEEP RECEPTOR, RECTANGULAR NB TOP

FUNCTION: Used in kitchens, hospitals, food markets, restaurants, schools and all types of food handling areas where the ultimate in sanitation is desirable and a small capacity receptor is required. Rectangular top is ideal for use under counters and along walls.

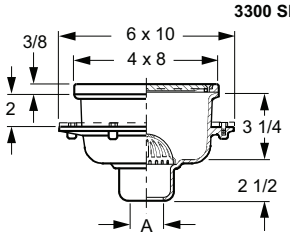

WITH DOME BOTTOM STRAINER

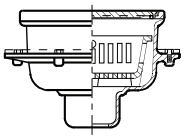

WITH SEDIMENT BUCKET

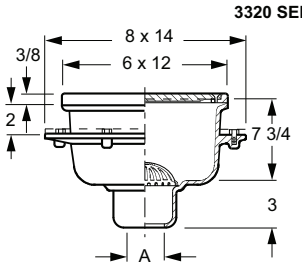

WITH DOME BOTTOM STRAINER

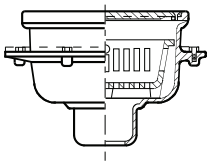

WITH SEDIMENT BUCKET

FIG. NO.	A OUTLET SIZE	TOP SIZE	FREE AREA SQ IN	†ALUMINUM DOME BOTTOM STRAINER	†ALUMINUM SEDIMENT BUCKET	APPROX. WEIGHT LBS
**3300	02", 03"	4 x 8"	6.7	**2,757.00**	-	17
**3301	02", 03"	4 x 8"	6.7	-	**3,010.00**	19
**3320	02", 03", 04"	6 x 12"	16.1	**3,732.00**	-	38
**3321	02", 03", 04"	6 x 12"	16.1	-	**3,981.00**	38

REGULARLY FURNISHED: Cast Iron Flanged Receptor with Seepage Holes, Acid Resistant Coated Interior, Nickel Bronze Rim and Secured Grate. Aluminum Dome Bottom Strainer or Sediment Bucket as Indicated by Figure Number.

OUTLET VARIATIONS (Specify type of outlet and pipe size in inches.)

Outlet Type	Outlet Designation Outlet Type/Pipe Size	ADD
Inside Caulk	C02, C03 (3300 Ser.)	**N/C**
	C02, C03, C04 (3320 Ser.)	**N/C**
Speedi-Set Outlet SW	L02 (3300 Ser.)	**N/C**
Speedi-Set Outlet XH	LXH02 (3300 Ser.)	**N/C**
Speedi-Seal Gasket*	02, 03 (3300 Ser.)	**73.00**
	02, 03, 04 (3320 Ser.)	**73.00**
No-Hub**	Y03 (3300 Ser.)	**N/C**

OPTIONS:

		ADD 3300 SERIES	ADD 3320 SERIES
-C	Flashing Clamp	**238.00**	**238.00**
-DBSE	ARC Dome Bottom Strainer	**409.00**	**409.00**
-G	All Galvanized Receptor	**N/C**	**N/C**
-P	Trap Primer Connection	**246.00**	**246.00**
-PDBS	Polished Alum DBS	**73.00**	**73.00**
-U	Vandal Proof Screws	**98.00**	**98.00**
-12	W/NB Rim and 1/2 Grate	**N/C**	**N/C**
-14	W/NB Rim and Grate w/ 2 1/2" Center Hole	**228.00**	-
-15	W/NB Rim and Alum Recessed Grate	**246.00**	**246.00**
-21	W/NB Rim & Grate w/4" Dia NB Funnel	**545.00**	**545.00**
-22	W/NB Rim & Grate w/6" Dia NB Funnel	**811.00**	**811.00**
-25	W/NB Rim & Grate w/ 8 1/4 x 3 1/4 x 4 1/2 Oval NB Funnel	**1,128.00**	**1,128.00**
-26	W/NB Rim & Grate w/6 x 2 1/2 x 1 Oval NB Funnel	**545.00**	**545.00**
-31	W/NB Rim and Extra Heavy Grate	**566.00**	-
-41	W/NB Rim and Solid Cover	**215.00**	**215.00**
-42	W/NB Rim and 1/2 Solid Cover	**215.00**	**215.00**

		DEDUCT	
-CI	All Duco Cast Iron Receptor	**214.00**	**366.00**
-FBS	Alum Flat Bottom Strainer (Replaces DBS)	**28.00**	**28.00**
-10	Less NB Rim & Grate	**485.00**	**545.00**
-11	Less Grate, with NB Rim	**391.00**	**440.00**

*Speedi-Seal Gasket Available for use with 2, 3, or 4" Caulk Outlet Bodies as Indicated. Specify Service Weight (SW) or Extra Heavy (XH).
**For Fig. 3300Y02, 3301Y02, 3320 & 3321, when No-Hub outlet is specified, a Caulk Outlet w/9502 Speedi-Seal Gasket will be substituted.

†REGULARLY FURNISHED

FIG. 3365 SANI-CEPTOR® ARC FLOOR & INDIRECT WASTE DRAINS, REFRIGERATOR DRAIN WITH RECESSED GRATE

FUNCTION: Used to receive waste from refrigerators and similar appliances. Purging of the sump by the flushing action prevents contamination.

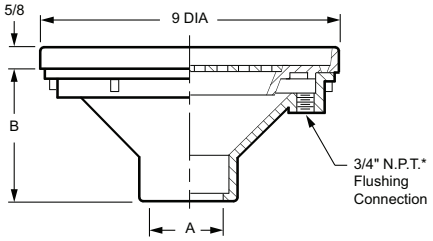

OUTLET VARIATIONS (Specify type of outlet and pipe size in inches.)

Outlet Type	Outlet Designation Outlet Type/Pipe Size	ADD
Inside Caulk	C02, C03	**N/C**
Speedi-Seal Gasket*	02	**73.00**
Threaded	T0150, T02, T03	**99.00**
No-Hub	Y0150, Y02, Y03	**See Fig. 2646Y for list add to THREADED body price**

OPTIONS:		DEDUCT
-CI	Duco CI Receptor	**486.00**

For Water Supply Control Boxes, See Fig 3380-3385

A SIZE	B	FREE AREA	DUCO CI ARC INT PB TOP	†DUCO CI ARC INT NB TOP	APPROX. WEIGHT LBS
0150, 02"	4 1/2"	7.20	**2,762.00**	**3,045.00**	15
03"	3 1/2"	7.20	**2,762.00**	**3,045.00**	15

REGULARLY FURNISHED: Cast Iron Body with Acid Resistant Coated Interior and Nickel Bronze Top.

*Speedi-Seal Gasket Available for use with 2, 3, or 4" Caulk Outlet Bodies as Indicated. Specify Service Weight (SW) or Extra Heavy (XH).

FIG. 3370 SANI-CEPTOR® CAN WASHING FLOOR DRAINS

FUNCTION: Used in areas where it is desired to wash the interior of garbage and other cans, and prevent the solids from entering the waste line. The exclusive Smith design combines an engineered floor drain with a "single orifice" can washing nozzle. The spray from the nozzle is adjustable from a solid stream to a driving fine mist, providing a means for thoroughly scouring the interior of the can. The ported sediment bucket catches all solids, and provides ample drainage.

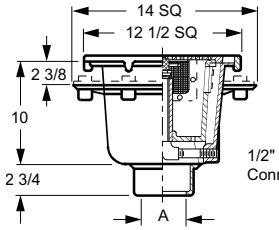

Fig. 3370

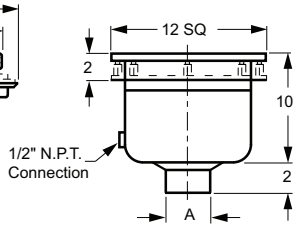

Fig. 3371

OUTLET VARIATIONS (Specify type of outlet and pipe size in inches.)

Outlet Type	Outlet Designation Outlet Type/Pipe Size	ADD
Inside Caulk	C02, C03, C04	**N/C**
Speedi-Set SW	L02, L03, L04 (3370 Only)	**N/C**
Speedi-Set XH	LXH02, LXH03, LXH04 (3370 Only)	**N/C**
Speedi-Seal Gasket*	03, 04	**73.00**
Threaded	T02, T03, T04	**99.00**
No-Hub	Y02, Y03, Y04	**N/C**

FIG. NO.	A OUTLET SIZE	TOP SIZE	FREE AREA SQ IN	ARC INT PB TOP	†ARC INT NB TOP	APPROX. WEIGHT LBS
3370	02", 03", 04"	12"	42	**6,397.00**	**6,520.00**	80

OPTIONS:		ADD
-C	Flashing Clamp (3370)	**251.00**
-C	Flashing Clamp (3371)	**251.00**
-U	Vandal Proof (3370)	**98.00**
-U	Vandal Proof (3371)	**814.00**

REGULARLY FURNISHED: 3370: Cast Iron Body with A.R.C. Interior, Nickel Bronze Rim and Grate, Free Standing Aluminum Bucket with Ported Openings Lined with 1/4" Stainless Steel Mesh and Bronze Adjustable Nozzle Assembly.

*Speedi-Seal Gasket Available for use with 2, 3, or 4" Caulk Outlet Bodies as Indicated. Specify Service Weight (SW) or Extra Heavy (XH).

FIG. NO.	A OUTLET SIZE	TOP SIZE	FREE AREA SQ IN	†STAINLESS STEEL	APPROX. WEIGHT LBS
3371	02", 03", 04"	12 1/2"	21	**5,464.00**	80

REGULARLY FURNISHED: 3371: 14 Gage Stainless Steel Body with No. 4 finish Interior, Stainless Grate, Free Standing Aluminum Bucket with Ported Openings Lined with 1/4" Stainless Steel Mesh and Bronze Adjustable Nozzle Assembly.

†REGULARLY FURNISHED

FIG. 3380 WATER SUPPLY CONTROL BOXES

FUNCTION: With potable water supply protected by the integral atmospheric vacuum breaker used to supply hot, cold or tempered water to can washing drains, flushing rim drains or other devices requiring a water supply. All operating parts are protected from vandalism by means of the hinged door which is provided with a cylinder lock. Both the hot and cold water supplies are provided with integral screw driver stops allowing maintenance of the control valves without shutting down the main water supply. Fig. 3380 is furnished with plaster grounds and is usually flush mounted in plaster walls. Fig. 3385 is surface mounted and is usually used in brick or masonry construction.

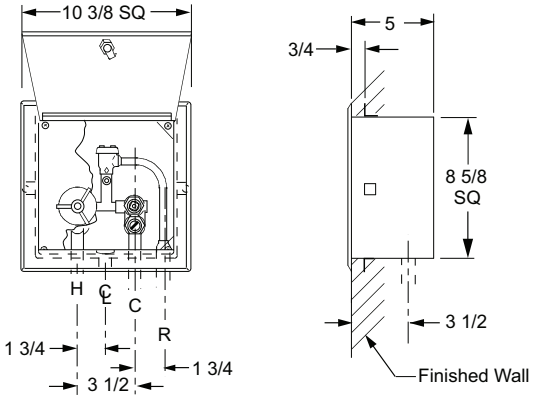

Fig. 3380

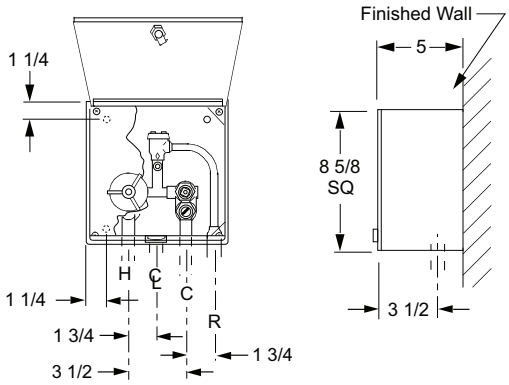

Fig. 3385

FIG. NO.	FACE OF WALL	SURFACE MOUNTED	APPROX. WEIGHT LBS
3380	**6,863.00**	-	15
3385	-	**6,863.00**	15

REGULARLY FURNISHED: Box: Type 304 stainless steel with cylinder type key lock and piano hinged cover. All exposed surfaces are polished to a No. 4 satin finish.

Internal Parts: Control valves, screwdriver stops and atmospheric type vacuum breaker are all bronze. Component parts are assembled with type "L" copper tubing and all connections are silver brazed. H & C inlet and remote outlet fittings are 1/2" NPT female. All are provided with integral ears secured to the control box with stainless steel vandal-proof screws, preventing damage during installation.

†REGULARLY FURNISHED

FIG. 3400 SERIES SANI-CEPTOR® ARC FLOOR & INDIRECT WASTE DRAINS, DEEP RECEPTOR, ARC ROUND NON-TRAFFIC TOP
FIG. 3402 SERIES SANI-CEPTOR® ARC FLOOR & INDIRECT WASTE DRAINS, SHALLOW RECEPTOR, ARC ROUND NON-TRAFFIC TOP
FIG. 3410 SERIES SANI-CEPTOR® ARC FLOOR & INDIRECT WASTE DRAINS, MEDIUM RECEPTOR, ARC SQUARE NON-TRAFFIC TOP

FUNCTION: Used in kitchens, hospitals, food markets, restaurants, schools and all types of food handling areas not subject to foot or other traffic, where the ultimate in sanitation is desirable and a large capacity receptor is required.

Fig. 3400

WITH DOME BOTTOM STRAINER — WITH SEDIMENT BUCKET

Fig. 3402

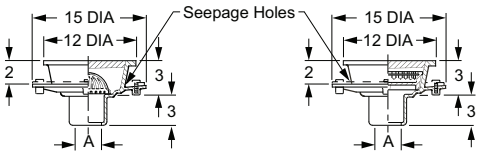

WITH DOME BOTTOM STRAINER — WITH SEDIMENT BUCKET

Fig. 3410

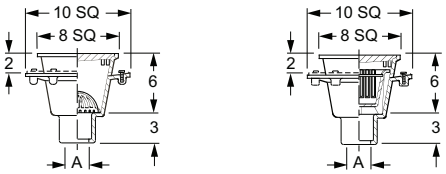

WITH DOME BOTTOM STRAINER — WITH SEDIMENT BUCKET

FIG. NO.	A OUTLET SIZE	TOP SIZE	FREE AREA SQ IN	†ALUMINUM DOME BOTTOM STRAINER	†ALUMINUM SEDIMENT BUCKET	APPROX. WEIGHT LBS
3400	02", 03", 04"	12"	22	**2,635.00**	-	42
3401	02", 03", 04"	12"	22	-	**3,039.00**	38
**3402	02", 03", 04"	12"	22	**2,395.00**	-	23
**3412	02", 03", 04"	12"	22	-	**2,805.00**	24
FIG. NO.	**A OUTLET SIZE**	**TOP SIZE**	**FREE AREA SQ IN**	**†ALUMINUM DOME BOTTOM STRAINER**	**†ABS SEDIMENT BUCKET**	**APPROX. WEIGHT LBS**
3410	02", 03", 04"	8" SQ	11	**2,258.00**	-	50
3411	02", 03", 04"	8" SQ	11	-	**2,513.00**	54

REGULARLY FURNISHED: Cast Iron Flanged Receptor with Seepage Holes, Acid Resistant Coated Interior, and Loose Set Acid Resistant Coated Cast Iron Grate. Aluminum Dome Bottom Strainer or Sediment Bucket as Indicated by Figure Number.

OUTLET VARIATIONS (Specify type of outlet and pipe size in inches.)

Outlet Type	Outlet Designation Outlet Type/Pipe Size	ADD
Inside Caulk	C02, C03, C04	**N/C**
Speedi-Set SW	L02, L03, L04	**N/C**
Speedi-Set XH	LXH02, LXH03, LXH04	**N/C**
Speedi-Seal Gasket*	02, 03, 04 (3400/3402 Ser. Only)	**73.00**
No-Hub**	Y02, Y03, Y04 (3400/3410 Ser. Only)	**N/C**

OPTIONS:

		3400 SER.	ADD 3410 SER.
-BS	SS Mesh Lined Bkt (Bkt Models Only)	**607.00**	**607.00**
-C	Flashing Clamp	**251.00**	**238.00**
-DBSE	ARC Dome Bottom Strainer	**409.00**	**409.00**
-DID	Drain Installation Device	**265.00**	**265.00**
-G	All Galvanized Receptor	**N/C**	**N/C**
-P	Trap Primer Connection	**246.00**	**246.00**
-PDBS	Polished Alum DBS	**73.00**	**73.00**
ARC CAST IRON SERIES			
-12	With ARC 1/2 Grate	**N/C**	**N/C**
-13	With ARC 3/4 Grate	**N/C**	**N/C**
-14	With ARC Grate w/2 1/2" DIA Ctr Hole	**228.00**	**228.00**
-15	With Alum Recessed Grate	**246.00**	**–**
-21	With ARC Grate w/4" Funnel	**486.00**	**486.00**
-22	With ARC Grate w/6" Funnel	**626.00**	**626.00**
-25	With ARC Grate w/8 1/4 x 3 1/4 x 4 1/2 Oval Funnel	**812.00**	**812.00**
-26	With ARC Grate w/6 x 2 1/2 x 1 Oval Funnel	**486.00**	**486.00**
-41	With ARC Solid Cover	**147.00**	**123.00**
-42	With ARC 1/2 Solid Cover	**147.00**	**123.00**
-43	With ARC 3/4 Solid Cover	**147.00**	**123.00**
-44	With ARC Solid Grate w/2 1/2" Dia. Center Hole	**367.00**	**341.00**
DUCO COATED CAST IRON SERIES			
-12	With 1/2 Grate	**N/C**	**N/C**
-13	With 3/4 Grate	**N/C**	**N/C**
-14	With Grate w/2 1/2" DIA Ctr Hole	**228.00**	**228.00**
-15	With Alum Recessed Grate	**246.00**	**–**
-21	With Grate w/4" Funnel	**228.00**	**228.00**
-22	With Grate w/6" Funnel	**366.00**	**366.00**
-25	With Grate w/8 1/4 x 3 1/4 x 4 1/2 Oval Funnel	**545.00**	**545.00**
-26	With Grate w/6 x 2 1/2 x 1 Oval Funnel	**228.00**	**228.00**
-41	With Solid Cover	**147.00**	**123.00**
-42	With 1/2 Solid Cover	**147.00**	**123.00**
-43	With 3/4 Solid Cover	**147.00**	**123.00**
-44	With Solid Grate w/2 1/2" Dia. Center Hole	**367.00**	**341.00**

			DEDUCT
-CI	Duco Cast Iron Receptor	**366.00**	**214.00**
-FBS	Alum FBS (Replaces DBS)	**28.00**	**28.00**
	Less Flange For 3400, Specify 3405 For 3401, Specify 3406	**486.00**	
ARC CAST IRON SERIES			
-10	Less ARC Grate	**339.00**	**246.00**
DUCO COATED CAST IRON SERIES			
-10	Less Grate	**123.00**	**98.00**

*Speedi-Seal Gasket Available for use with 2, 3, or 4" Caulk Outlet Bodies as Indicated. Specify Service Weight (SW) or Extra Heavy (XH).
**For 3402 & 3412, when No-Hub outlet is specified, a Caulk Outlet w/9502 Speedi-Seal Gasket will be substituted.

†REGULARLY FURNISHED

FIG. 3420-3441 SERIES SANI-CEPTOR® ARC FLOOR & INDIRECT WASTE DRAINS, MEDIUM, DEEP, EXTRA DEEP RECEPTOR, ARC SQUARE NON-TRAFFIC TOP

FUNCTION: Used in kitchens, hospitals, food markets, restaurants, schools and all types of food handling areas not subject to foot or other traffic. The deeper receptors are particularly useful for indirect waste applications or for handling a large volume of waste water.

3420 - 3441

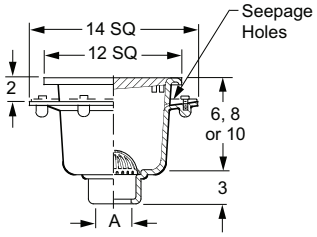

WITH DOME BOTTOM STRAINER

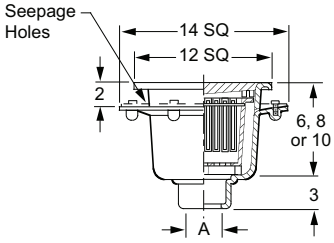

WITH SEDIMENT BUCKET

FIG. NO.	A OUTLET SIZE	SUMP DEPTH	TOP SIZE	FREE AREA SQ IN	†ALUMINUM DOME BOTTOM STRAINER	†ABS SEDIMENT BUCKET	APPROX. WEIGHT LBS
3420	02", 03", 04"	6	12" SQ	26	**3,211.00**	-	50
3421	02", 03", 04"	6	12" SQ	26	-	**3,616.00**	54
3430	02", 03", 04"	8	12" SQ	26	**3,351.00**	-	54
3431	02", 03", 04"	8	12" SQ	26	-	**3,761.00**	57
3440	02", 03", 04"	10	12" SQ	26	**3,511.00**	-	69
3441	02", 03", 04"	10	12" SQ	26	-	**3,917.00**	73

REGULARLY FURNISHED: Cast Iron Flanged Receptor with Seepage Holes, Acid Resistant Coated Interior, and Loose Set Acid Resistant Coated Cast Iron Grate. Aluminum Dome Bottom Strainer or Plastic ABS Sediment Bucket as Indicated by Figure Number.

OUTLET VARIATIONS (Specify type of outlet and pipe size in inches.)

Outlet Type	Outlet Designation Outlet Type/Pipe Size	ADD
Inside Caulk	C02, C03, C04	**N/C**
Speedi-Set SW	L02, L03, L04	**N/C**
Speedi-Set XH	LXH02, LXH03, LXH04	**N/C**
Speedi-Seal Gasket*	02, 03, 04	**73.00**
No-Hub	Y02, Y03, Y04	**N/C**

OPTIONS:		ADD
-BS	SS Mesh Lined Bucket (Bucket Models Only)	**607.00**
-C	Flashing Clamp	**251.00**
-DBSE	ARC Dome Bottom Strainer	**409.00**
-DID	Drain Installation Device	**265.00**
-G	All Galvanized Receptor	**N/C**
-P	Trap Primer Connection	**246.00**
-PDBS	Polished Alum DBS	**73.00**

ARC CAST IRON SERIES

-12	With ARC 1/2 Grate	**N/C**
-13	With ARC 3/4 Grate	**N/C**
-14	With ARC Grate w/2 1/2" DIA Ctr Hole	**228.00**
-15	With Alum Recessed Grate	**246.00**
-21	With ARC Grate w/4" Funnel	**486.00**
-22	With ARC Grate w/6" Funnel	**626.00**
-25	With ARC Grate w/8 1/4 x 3 1/4 x 4 1/2 Oval Funnel	**812.00**
-26	With ARC Grate w/6 x 2 1/2 x 1 Oval Funnel	**486.00**
-41	With ARC Solid Cover	**147.00**
-42	With ARC 1/2 Solid Cover	**147.00**
-43	With ARC 3/4 Solid Cover	**147.00**
-44	With ARC Solid Grate w/2 1/2" Dia. Center Hole	**367.00**

DUCO COATED CAST IRON SERIES

-12	With 1/2 Grate	**N/C**
-13	With 3/4 Grate	**N/C**
-14	With Grate w/2 1/2" DIA Ctr Hole	**228.00**
-15	With Alum Recessed Grate	**246.00**
-21	With Grate w/4" Funnel	**228.00**
-22	With Grate w/6" Funnel	**366.00**
-25	With Grate w/8 1/4 x 3 1/4 x 4 1/2 Oval Funnel	**545.00**
-26	With Grate w/6 x 2 1/2 x 1 Oval Funnel	**228.00**
-41	With Solid Cover	**147.00**
-42	With 1/2 Solid Cover	**147.00**
-43	With 3/4 Solid Cover	**147.00**
-44	With Solid Grate w/2 1/2" Dia. Center Hole	**367.00**

		DEDUCT
-CI	Duco Cast Iron Receptor	**366.00**
-FBS	Alum FBS (Replaces DBS)	**28.00**
	Less Flange	**492.00**
	For 3430, Specify 3435 (Caulk outlet only)	
	For 3431, Specify 3436 (Caulk outlet only)	

ARC CAST IRON SERIES

-10	Less ARC Grate	**293.00**

DUCO COATED CAST IRON SERIES

-10	Less Grate	**123.00**

*Speedi-Seal Gasket Available for use with 2, 3, or 4" Caulk Outlet Bodies as Indicated. Specify Service Weight (SW) or Extra Heavy (XH).

†REGULARLY FURNISHED

FIG. 3450 SERIES SANI-CEPTOR® ARC FLOOR & INDIRECT WASTE DRAINS DEEP RECEPTOR, ARC SQUARE NON-TRAFFIC TOP

FUNCTION: Used in kitchens, hospitals, food markets, restaurants, schools and all types of food handling areas not subject to foot or other traffic, where the ultimate in sanitation is desirable and a large capacity receptor is required.

Fig. 3450

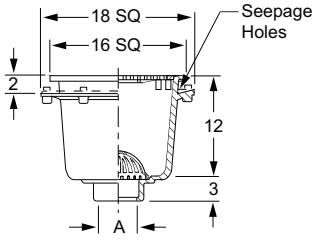

WITH DOME BOTTOM STRAINER

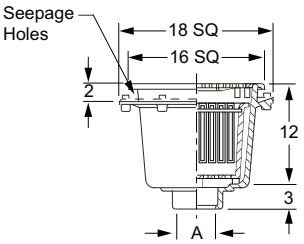

WITH SEDIMENT BUCKET

FIG. NO.	A OUTLET SIZE	TOP SIZE	FREE AREA SQ IN	†ALUMINUM DOME BOTTOM STRAINER	†ALUMINUM SEDIMENT BUCKET	APPROX. WEIGHT LBS
3450	02", 03", 04"	16" SQ	55	**6,026.00**	-	73
3450	05", 06", 08"	16" SQ	55	**6,026.00**	-	73
3451	02", 03", 04"	16" SQ	55	-	**7,091.00**	75
3451	05", 06", 08"	16" SQ	55	-	**7,091.00**	75

REGULARLY FURNISHED: Cast Iron Flanged Receptor with Seepage Holes, Acid Resistant Coated Interior, and Loose Set Acid Resistant Coated Cast Iron Grate. Aluminum Dome Bottom Strainer or Sediment Bucket as Indicated by Figure Number.

OUTLET VARIATIONS (Specify type of outlet and pipe size in inches.)

Outlet Type	Outlet Designation Outlet Type/Pipe Size	ADD
Inside Caulk	C02, C03, C04	**N/C**
	C05, C06, C08	**N/C**
Speedi-Seal Gasket*	03, 04	**73.00**

OPTIONS:		ADD
-BS	Mesh Liner on Bucket (3451 only)	**1,205.00**
-C	Flashing Clamp	**724.00**
-DBSE	ARC Dome Bottom Strainer	**409.00**
-G	All Galvanized Receptor	**N/C**
-P	Trap Primer Connection	**246.00**
-PDBS	Polished Alum Dome Bottom Strainer	**73.00**

ARC CAST IRON SERIES

-12	With ARC 1/2 Grate	**N/C**
-13	With ARC 3/4 Grate	**N/C**
-14	With ARC Grate w/2 1/2" DIA Ctr Hole	**228.00**
-21	With ARC Grate w/4" ARC Funnel	**486.00**
-22	With ARC Grate w/6" ARC Funnel	**626.00**
-25	With ARC Grate w/ 8 1/4 x 3 1/4 x 4 1/2" Oval ARC Funnel	**812.00**
-26	With ARC Grate w/6 x 2 1/2 x 1" Oval ARC Funnel	**486.00**
-41	With ARC Solid Cover	**191.00**
-42	With ARC 1/2 Solid Cover	**191.00**
-43	With ARC 3/4 Solid Cover	**191.00**
-44	With ARC Solid Grate w/2 1/2" Dia. Center Hole	**414.00**

DUCO COATED CAST IRON SERIES

-12	With 1/2 Grate	**N/C**
-13	With 3/4 Grate	**N/C**
-14	With Grate w/2 1/2" DIA Ctr Hole	**228.00**
-21	With Grate w/4" ARC Funnel	**228.00**
-22	With Grate w/6" ARC Funnel	**366.00**
-25	With Grate w/ 8 1/4 x 3 1/4 x 4 1/2" Oval Funnel	**545.00**
-26	With Grate w/6 x 2 1/2 x 1" Oval ARC Funnel	**228.00**
-41	With Solid Cover	**191.00**
-42	With 1/2 Solid Cover	**191.00**
-43	With 3/4 Solid Cover	**191.00**
-44	With Solid Grate w/2 1/2" Dia. Center Hole	**414.00**

		DEDUCT
-CI	Duco Cast Iron Receptor	**485.00**
-FBS	Alum Flat Bottom Strainer (Replaces DBS)	**28.00**

ARC CAST IRON SERIES

-10	Less ARC Grate	**485.00**

DUCO COATED CAST IRON SERIES

-10	Less Grate	**191.00**

*Speedi-Seal Gasket Available for use with 2, 3, or 4" Caulk Outlet Bodies as Indicated. Specify Service Weight (SW) or Extra Heavy (XH).

†REGULARLY FURNISHED

FIG. 3460-3470 SERIES SANI-CEPTOR® ARC FLOOR & INDIRECT WASTE DRAINS, SHALLOW, DEEP RECEPTOR, ARC RECTANGULAR NON-TRAFFIC TOP

FUNCTION: Used in kitchens, hospitals, food markets, restaurants, schools and all types of food handling areas not subject to foot or other traffic where the ultimate in sanitation is desirable and a small or large capacity receptor is required. Rectangular top is ideal for use under counters, and along walls.

3460

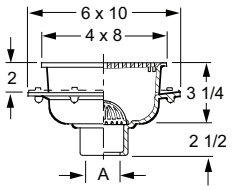

WITH DOME BOTTOM STRAINER

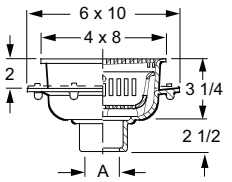

WITH SEDIMENT BUCKET

3470

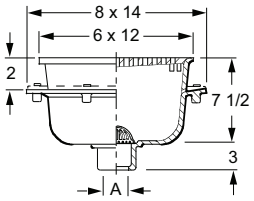

WITH DOME BOTTOM STRAINER

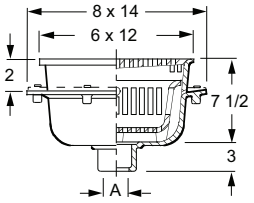

WITH SEDIMENT BUCKET

OUTLET VARIATIONS (Specify type of outlet and pipe size in inches.)

Outlet Type	Outlet Designation Outlet Type/Pipe Size	ADD
Inside Caulk	C02, C03, C04	**N/C**
Speedi-Seal Gasket*	02, 03, 04	**73.00**
No-Hub**	Y03 (3460 Ser. Only)	**N/C**

OPTIONS:

		ADD 3460 SER.	ADD 3470 SER.
-BS	SS Mesh Lined Bkt (Bkt Models Only)	**607.00**	**607.00**
-C	Flashing Clamp	**238.00**	**238.00**
-G	All Galvanized Receptor	**N/C**	**N/C**
-P	Trap Primer Connection	**246.00**	**246.00**
-PDBS	Polished Aluminum DBS	**73.00**	**73.00**
-12	1/2 Grate	**N/C**	**N/C**
-21	With ARC Grate w/4" Funnel	**486.00**	**486.00**
-22	With ARC Grate w/6" Funnel	**626.00**	**626.00**
-25	With ARC Grt w/8 1/4 x 4 1/2" Funnel	**812.00**	**812.00**
-26	With ARC Grate w/6 x 1" Oval Funnel	**486.00**	**486.00**
		DEDUCT	
-CI	Duco Cast Iron Receptor	**214.00**	**366.00**
-FBS	Alum FBS (Replaces DBS)	**28.00**	**28.00**
-10	Less Grate	**191.00**	**246.00**

FIG. NO.	A OUTLET SIZE	TOP SIZE	FREE AREA SQ IN	†ALUMINUM DOME BOTTOM STRAINER	†ALUMINUM SEDIMENT BUCKET	APPROX. WEIGHT LBS
**3460	02", 03"	4 x 8"	6.5	**2,334.00**	-	17
**3461	02", 03"	4 x 8"	6.5	-	**2,582.00**	19
**3470	02", 03", 04"	6 x 12"	13.75	**3,110.00**	-	35
**3471	02", 03", 04"	6 x 12"	13.75	-	**3,353.00**	38

REGULARLY FURNISHED: Cast Iron Flanged Receptor with Acid Resistant Coated Interior with Loose Set Acid Resistant Coated Grate, Aluminum Dome Bottom Strainer or Aluminum Sediment Bucket as Indicated by Figure Number.

*Speedi-Seal Gasket Available for use with 2, 3, or 4" Caulk Outlet Bodies as Indicated. Specify Service Weight (SW) or Extra Heavy (XH).
**For Fig. 3460Y02, 3461Y02, 3470 & 3471, when No-Hub outlet is specified, a Caulk Outlet w/9502 Speedi-Seal Gasket will be substituted.

†REGULARLY FURNISHED

FIG. 3482 SERIES SANI-CEPTOR® ARC FLOOR & INDIRECT WASTE DRAINS, EXTRA LARGE DEEP RECEPTOR, ARC RECTANGULAR NON-TRAFFIC TOP

FUNCTION: Used in kitchens, hospitals, food markets, restaurants, schools and all types of food handling areas not subject to foot or other traffic where the ultimate in sanitation is desirable and a large capacity receptor is required. Rectangular top is ideal for use under counters and along walls.

3482

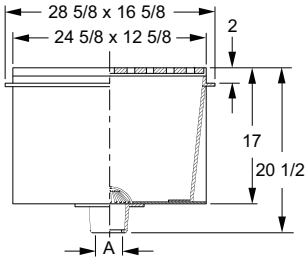

WITH DOME BOTTOM STRAINER

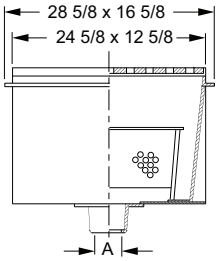

WITH SEDIMENT BUCKET

OUTLET VARIATIONS (Specify type of outlet and pipe size in inches.)

Outlet Type	Outlet Designation Outlet Type/Pipe Size	ADD
Inside Caulk	C02, C03, C04, C05, C06	N/C
No-Hub	Y02, Y03, Y04	N/C

OPTIONS:		ADD
-C	Flashing Clamp	724.00
-G	All Galvanized Receptor	N/C
-P	Trap Primer Connection	485.00
-PDBS	Polished Aluminum DBS	73.00
-12	Acid Resistant Coated 1/2 Grate	N/C
-13	Acid Resistant Coated 3/4 Grate	N/C

		DEDUCT
-FBS	Alum FBS (Replaces DBS)	28.00
-10	Less Grate	1,205.00

FIG. NO.	A OUTLET SIZE	TOP SIZE	FREE AREA SQ IN	†ALUMINUM DOME BOTTOM STRAINER	†STAINLESS STEEL SEDIMENT BUCKET	APPROX. WEIGHT LBS
3482	02", 03", 04"	24 x12"	125	**12,204.00**	-	130
3482	05",06"	24 x12"	125	**12,204.00**	-	130
3483	02", 03", 04"	24 x12"	125	-	**14,622.00**	130
3483	05", 06"	24 x12"	125	-	**14,622.00**	130

REGULARLY FURNISHED: Fabricated Steel Flanged Receptor with Acid Resistant Coated Interior with Loose Set Acid Resistant Coated Grates, Aluminum Dome Bottom Strainer or Stainless Steel Sediment Bucket as Indicated By Figure Number.

FIG. 3510-F11 FUNNEL-CEPTOR® INDIRECT WASTE DRAINS WITH ADJUSTABLE STRAINER HEADS

FUNCTION: Used to receive waste water from indirect waste lines. Exposed grate surrounding funnel serves as drain for surrounding floor area. Adjustable strainer heads permit accurate positioning to meet finished floor level.

Fig. 3510

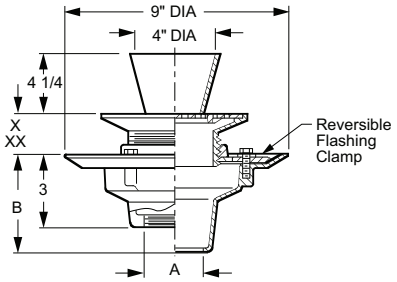

OUTLET VARIATIONS (Specify type of outlet and pipe size in inches.)

Outlet Type	Outlet Designation Outlet Type/Pipe Size	"B" Body HT. DIM.	ADD
Inside Caulk	C02, C03, C04	4"	N/C
Speedi-Set SW	L02, L03, L04	4"	N/C
Speedi-Set XH	LXH02, LXH03, LXH04	4"	N/C
Threaded	T02, T03, T04	3"	99.00
No-Hub	Y02, Y03, Y04	4"	N/C

OPTIONS:		ADD
-B	Sediment Bucket	139.00
-BB	Bronze Body (2-4")	1,549.00
	5" or 6"	4,762.00
-G	Galvanized Body	251.00
-P	Trap Primer Conn	N/C
-U	Vandal Proof Screws	70.00
	3581 6" Dia Funnel, PB or NB	262.00
	CP	285.00
	3590 6 x 2 1/2 x 1" Funnel	N/C
	Funnel Threaded into Grate	345.00

Drain Body Only	Duco CI	Galv CI
02, 03, 04"	246.00	497.00

A OUTLET SIZE	STRAINER SIZE DIA	FREE AREA SQ IN DIA	*X MIN	*X MAX	**XX MIN	**XX MAX	PB TOP & FUNNEL	†NB TOP & FUNNEL	CP TOP & FUNNEL	APPROX. WEIGHT LBS.
02, 03, 04"	05"	7	1 1/4"	2 1/4"	3/4"	1 5/8"	**1,058.00**	**1,168.00**	**1,255.00**	13
02, 03, 04"	06"	9	1 1/4"	2 1/4"	3/4"	1 5/8"	**1,148.00**	**1,304.00**	**1,403.00**	14
02, 03, 04"	07"	14	1 1/4"	2 1/4"	7/8"	1 7/8"	**1,296.00**	**1,419.00**	**1,530.00**	15
02, 03, 04"	08"	17	1 1/2"	2 1/2"	1"	1 7/8"	**1,502.00**	**1,642.00**	**1,779.00**	18
02, 03, 04"	09", 10"						**1,882.00**	**2,038.00**	**2,216.00**	20

*** Collar in high position.**
****Collar in low position.**

REGULARLY FURNISHED: Duco Cast Iron Body and Flashing Collar with Adjustable Strainer Head with Secured Square Hole Grate and Funnel attached to the grate with concealed screws, permitting funnel to be moved to different positions on the grate. Type of Body and Strainer Head as indicated by Figure Number and Strainer Suffix Letter Selected.

NOTE: For body only pricing see Fig. 2010.

†REGULARLY FURNISHED

FIG. 3515-F11 FUNNEL-CEPTOR® INDIRECT WASTE DRAINS WITH ADJUSTABLE STRAINER HEADS

FUNCTION: Used to receive waste water from indirect waste lines. Exposed grate surrounding funnel serves as drain for surrounding floor area. Adjustable strainer heads permit accurate positioning to meet finished floor level.

Fig. 3515

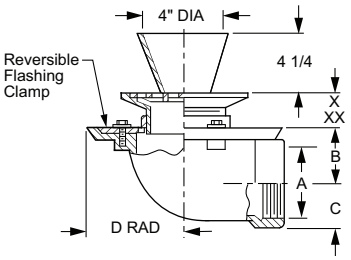

OUTLET VARIATIONS (Specify type of outlet and pipe size in inches.)

Outlet Type	Outlet Designation Outlet Type/Pipe Size	ADD
Threaded	T02, T03, T04	N/C
No-Hub	Y02, Y03, Y04	See Fig. 2646Y for add to THRD body

OPTIONS:		ADD
-B	Sediment Bucket	139.00
-G	Galvanized Body	251.00
-P	Trap Primer Conn	N/C
-U	Vandal Proof Screws	70.00
	3581 6" Dia Funnel, PB or NB	262.00
	CP	285.00
	3590 6 x 2 1/2 x 1" Funnel	N/C
	Funnel Threaded into Grate	345.00

Drain Body Only	Duco CI	Galv CI
02, 03"	524.00	775.00
04"	642.00	893.00

A OUTLET SIZE	STRAINER SIZE DIA	FREE AREA SQ IN DIA	B	C	D	*X MIN MAX	**XX MIN MAX	PB TOP & FUNNEL	†NB TOP & FUNNEL	CP TOP & FUNNEL	APPROX. WEIGHT LBS.
02"	05"	7	2 3/4	1 1/4	4 3/4	1 1/4 2 1/4	3/4 1 5/8	1,336.00	1,446.00	1,526.00	18
03"	05"	7	2 3/4	2 1/4	4 3/4	1 1/4 2 1/4	3/4 1 5/8	1,336.00	1,446.00	1,526.00	18
04"	05"	7	3 1/4	3 1/4	6	1 1/4 2 1/4	3/4 1 5/8	1,454.00	1,564.00	1,644.00	20
02"	06"	9	2 3/4	1 1/4	4 3/4	1 1/4 2 1/4	3/4 1 5/8	1,426.00	1,582.00	1,681.00	19
03"	06"	9	2 3/4	2 1/4	4 3/4	1 1/4 2 1/4	3/4 1 5/8	1,426.00	1,582.00	1,681.00	19
04"	06"	9	3 1/4	3 1/4	6	1 1/4 2 1/4	3/4 1 5/8	1,544.00	1,700.00	1,799.00	19
02"	07"	14	2 3/4	1 1/4	4 3/4	1 1/4 2 1/4	7/8 1 7/8	1,575.00	1,697.00	1,816.00	20
03"	07"	14	2 3/4	2 1/4	4 3/4	1 1/4 2 1/4	7/8 1 7/8	1,575.00	1,697.00	1,816.00	20
04"	07"	14	3 1/4	3 1/4	6	1 1/4 2 1/4	7/8 1 7/8	1,693.00	1,815.00	1,934.00	20
02"	08"	17	2 3/4	1 1/4	4 3/4	1 1/2 2 1/2	1 1 7/8	1,780.00	1,920.00	2,057.00	22
03"	08"	17	2 3/4	2 1/4	4 3/4	1 1/2 2 1/2	1 1 7/8	1,780.00	1,920.00	2,057.00	22
04"	08"	17	3 1/4	3 1/4	6	1 1/2 2 1/2	1 1 7/8	1,898.00	2,038.00	2,175.00	25

NOTE: For body only pricing see Fig. 2015.

*** Collar in high position.**
****Collar in low position.**

REGULARLY FURNISHED: Duco Cast Iron Body and Flashing Collar with Adjustable Strainer Head with Secured Square Hole Grate and Funnel attached to the grate with concealed screws, permitting funnel to be moved to different positions on the grate. Type of Body and Strainer Head as indicated by Figure Number and Strainer Suffix Letter Selected.

FIG. 3520-F11 SERIES FUNNEL-CEPTOR® INDIRECT WASTE DRAINS W/ADJUSTABLE STRAINER HEADS, SHALLOW TRAP

FUNCTION: Used to receive waste water from indirect waste lines. Exposed grate surrounding funnel serves as drain for surrounding floor area. Adjustable strainer heads permit accurate positioning to meet finished floor level.

Fig. 3520

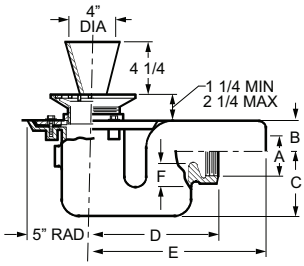

OUTLET VARIATIONS (Specify type of outlet and pipe size in inches.)

Outlet Type	Outlet Designation Outlet Type/Pipe Size	ADD
Spigot (3521)	S02, S03, S04	N/C
Threaded (3520)	T02, T03, T04	N/C

OPTIONS:		ADD
-B	Sediment Bucket	139.00
-BFV	Ball Float Backwater Valve	485.00
-G	Galvanized Body	534.00
-NH	High Aux Inlet	442.00
-P	Trap Primer Conn	210.00
-U	Vandal Proof Screws	70.00
	3581 6" Dia Funnel, NB or PB	262.00
	CP	285.00
	3590 6x2 1/2x1" Funnel	N/C
	Funnel Threaded into Grate	345.00

Drain Body Only	Duco CI	Galv CI
02, 03"	724.00	1,258.00
04"	1,142.00	1,676.00

A OUTLET SIZE	STRAINER SIZE DIA	FREE AREA SQ IN DIA	B	C	D	E	F SEAL	PB TOP & FUNNEL	†NB TOP & FUNNEL	CP TOP & FUNNEL	APPROX. WEIGHT LBS.
02"	05"	7	1 3/4	5	6 3/4	9 1/2	2	1,536.00	1,646.00	1,726.00	21
03"	05"	7	2 1/4	4 1/2	9	12 1/4	2	1,536.00	1,646.00	1,726.00	21
04"	05"	7	3	8 1/2	10	12 3/4	2 1/2	1,954.00	2,064.00	2,144.00	22
02"	06"	9	1 3/4	5	6 3/4	9 1/2	2	1,626.00	1,782.00	1,881.00	22
03"	06"	9	2 1/4	4 1/2	9	12 1/4	2	1,626.00	1,782.00	1,881.00	22
04"	06"	9	3	8 1/2	10	12 3/4	2 1/2	2,044.00	2,200.00	2,299.00	21
02"	07"	14	1 3/4	5	6 3/4	9 1/2	2	1,775.00	1,897.00	2,016.00	31
03"	07"	14	2 1/4	4 1/2	9	12 1/4	2	1,775.00	1,897.00	2,016.00	31
04"	07"	14	3	8 1/2	10	12 3/4	2 1/2	2,193.00	2,315.00	2,434.00	31
02"	08"	17	1 3/4	5	6 3/4	9 1/2	2	1,980.00	2,120.00	2,257.00	39
03"	08"	17	2 1/4	4 1/2	9	12 1/4	2	1,980.00	2,120.00	2,257.00	39
04"	08"	17	3	8 1/2	10	12 3/4	2 1/2	2,398.00	2,538.00	2,675.00	40

REGULARLY FURNISHED: Duco Cast Iron Body and Flashing Collar with Adjustable Strainer Head with Secured Square Hole Grate and Funnel attached to the grate with concealed screws, permitting funnel to be moved to different positions on the grate. Type of Body and Strainer Head as indicated by Figure Number and Strainer Suffix Letter Selected.

NOTE: For body only pricing see Fig. 2020, 2021.

†REGULARLY FURNISHED

FIG. 3530-F11 SERIES FUNNEL-CEPTOR® INDIRECT WASTE DRAINS WITH ADJUSTABLE STRAINER HEADS

FUNCTION: Used to receive waste water from indirect waste lines. Exposed grate surrounding funnel serves as drain for surrounding floor area. Adjustable strainer heads permit accurate positioning to meet finished floor level.

Fig. 3530

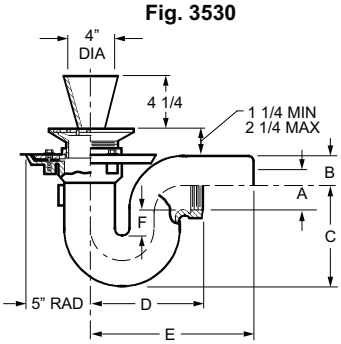

OUTLET VARIATIONS (Specify type of outlet and pipe size in inches.)

Outlet Type	Outlet Designation Outlet Type/Pipe Size	ADD
Spigot (3531)	S02, S03, S04	N/C
Threaded (3530)	T02, T03, T04	N/C

OPTIONS:		ADD
-B	Sediment Bucket	139.00
-BFV	Ball Float Backwater Valve	485.00
-G	Galvanized Body	534.00
-P	Trap Primer Conn	210.00
-NH	High Aux Inlet	442.00
-U	Vandal Proof Screws	70.00
	3581 6" Dia Funnel, PB or NB	262.00
	CP	285.00
	3590 6x2 1/2x1" Funnel	N/C
	Funnel Threaded into Grate	345.00

Drain Body Only	Duco CI	Galv CI
02, 03"	849.00	1,383.00
04"	968.00	1,502.00

A OUTLET SIZE	STRAINER SIZE DIA	FREE AREA SQ IN DIA	B	C	D	E	F SEAL	PB TOP & FUNNEL	†NB TOP & FUNNEL	CP TOP & FUNNEL	APPROX. WEIGHT LBS.
02"	05"	7	1 3/4	5 1/4	5	8	2	**1,661.00**	**1,771.00**	**1,851.00**	25
03"	05"	7	2	7	8	10	2 1/4	**1,661.00**	**1,771.00**	**1,851.00**	25
04"	05"	7	3	8	10	12 3/4	2 1/2	**1,780.00**	**1,890.00**	**1,970.00**	26
02"	06"	9	1 3/4	5 1/4	5	8	2	**1,751.00**	**1,907.00**	**2,006.00**	26
03"	06"	9	2	7	8	10	2 1/4	**1,751.00**	**1,907.00**	**2,006.00**	26
04"	06"	9	3	8	10	12 3/4	2 1/2	**1,870.00**	**2,026.00**	**2,125.00**	24
02"	07"	14	1 3/4	5 1/4	5	8	2	**1,900.00**	**2,022.00**	**2,141.00**	28
03"	07"	14	2	7	8	10	2 1/4	**1,900.00**	**2,022.00**	**2,141.00**	28
04"	07"	14	3	8	10	12 3/4	2 1/2	**2,019.00**	**2,141.00**	**2,260.00**	28
02"	08"	17	1 3/4	5 1/4	5	8	2	**2,105.00**	**2,245.00**	**2,382.00**	35
03"	08"	17	2	7	8	10	2 1/4	**2,105.00**	**2,245.00**	**2,382.00**	35
04"	08"	17	3	8	10	12 3/4	2 1/2	**2,224.00**	**2,364.00**	**2,501.00**	39

REGULARLY FURNISHED: Duco Cast Iron Body and Flashing Collar with Adjustable Strainer Head with Secured Square Hole Grate and Funnel attached to the grate with concealed screws, permitting funnel to be moved to different positions on the grate. Type of Body and Strainer Head as indicated by Figure Number and Strainer Suffix Letter Selected.

NOTE: For body only pricing see Fig. 2030.

FIG. 3540-F11 SERIES FUNNEL-CEPTOR® INDIRECT WASTE DRAINS WITH ADJUSTABLE STRAINER HEADS

FUNCTION: Used to receive waste water from indirect waste lines. Exposed grate surrounding funnel serves as drain for surrounding floor area. Adjustable strainer heads permit accurate positioning to meet finished floor level.

Fig. 3540

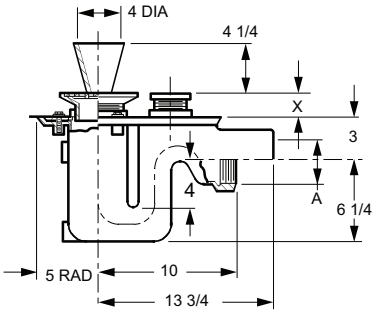

OUTLET VARIATIONS (Specify type of outlet and pipe size in inches.)

Outlet Type	Outlet Designation Outlet Type/Pipe Size	ADD
Spigot (3541)	S02, S03, S04	N/C
Threaded (3540)	T02, T03, T04	N/C

OPTIONS:		ADD
-B	Sediment Bucket	139.00
-G	Galvanized Body	675.00
-NH	High Aux Inlet	442.00
-NL	Low Auxiliary Inlet	442.00
-P	Trap Primer Conn	210.00
-U	Vandal Proof Screws	70.00
	Funnel Threaded into Grate	345.00
	3581 6" Dia Funnel, PB or NB	262.00
	CP	285.00
	3590 6x2 1/2x1" Funnel	N/C

Drain Body Only	Duco CI	Galv CI
02, 03, 04"	1,447.00	2,122.00

A OUTLET SIZE	STRAINER SIZE DIA	FREE AREA SQ IN DIA	X MIN	X MAX	PB TOP & FUNNEL	†NB TOP & FUNNEL	CP TOP & FUNNEL	APPROX. WEIGHT LBS.
02, 03, 04"	05"	7	1 1/4	2 1/4	**2,259.00**	**2,369.00**	**2,449.00**	37
02, 03, 04"	06"	7	1 1/4	2 1/4	**2,349.00**	**2,505.00**	**2,604.00**	39
02, 03, 04"	07"	7	1 1/4	2 1/4	**2,498.00**	**2,620.00**	**2,739.00**	41
02, 03, 04"	08"	9	1 1/2	2 1/2	**2,703.00**	**2,843.00**	**2,980.00**	43

NOTE: For body only pricing see Fig. 2040.

REGULARLY FURNISHED: Duco Cast Iron Body and Flashing Collar with Adjustable Strainer Head with Secured Square Hole Grate and Funnel attached to the grate with concealed screws, permitting funnel to be moved to different positions on the grate. Type of Body and Strainer Head as indicated by Figure Number and Strainer Suffix Letter Selected.

†REGULARLY FURNISHED

OPTIONAL ADJUSTABLE STRAINER HEADS

Suffix -F10

SUFFIX NUMBER	TOP SIZE	H	PB TOP	†NB TOP	CP TOP	APPROX. WEIGHT LBS
-F10	08"	2 3/8	**1,353.00**	**1,541.00**	**1,697.00**	8

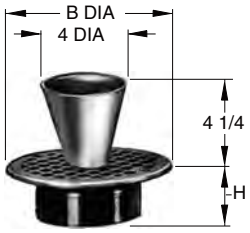

Suffix -F11

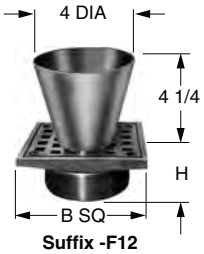

Suffix -F12

SUFFIX NUMBER	TOP SIZE B DIA or SQ	H	PB TOP	†NB TOP	CP TOP	APPROX. WEIGHT LBS
-F11	5"	2	**814.00**	**922.00**	**1,009.00**	5
-F11	6"	2	**902.00**	**1,058.00**	**1,157.00**	6
-F11	7"	2 1/4	**1,047.00**	**1,173.00**	**1,285.00**	7
-F11	8"	2 1/2	**1,259.00**	**1,396.00**	**1,533.00**	8
-F11	9"	2 1/2	**1,634.00**	**1,792.00**	**1,969.00**	11
-F11	10"	2 3/4	**1,634.00**	**1,792.00**	**1,969.00**	13
-F12	5" x 5"	2	**976.00**	**1,125.00**	**1,229.00**	5
-F12	6" x 6"	2	**1,094.00**	**1,220.00**	**1,346.00**	6
-F12	7" x 7"	2 1/4	**1,254.00**	**1,400.00**	**1,537.00**	7
-F12	8" x 8"	2 1/2	**1,432.00**	**1,638.00**	**1,788.00**	9
-F12	9" x 9"	2 1/2	**1,767.00**	**1,995.00**	**2,186.00**	11
-F12	10" x 10"	2 3/4	**2,198.00**	**2,427.00**	**2,666.00**	13

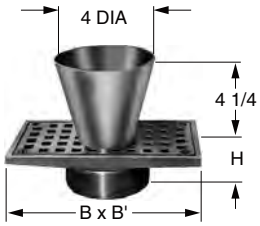

Suffix -F13, -F14, -F15, -F16 -F17 & -F18

SUFFIX NUMBER	TOP SIZE B x B'	H	PB TOP	†NB TOP	CP TOP	APPROX. WEIGHT LBS
-F13	4 1/4" x 8"	2 1/4	**1,479.00**	**1,658.00**	**1,819.00**	6
-F14	4" x 12"	2 1/2	**1,650.00**	**1,933.00**	**2,121.00**	11
-F15	5" x 9"	2 1/4	**1,479.00**	**1,658.00**	**1,819.00**	7
-F16	5" x 13"	3	**1,888.00**	**2,139.00**	**2,345.00**	11
-F17	5" x 17"	3	**2,012.00**	**2,258.00**	**2,486.00**	16
-F18	6" x 10"	2 1/4	**1,888.00**	**2,139.00**	**2,345.00**	11

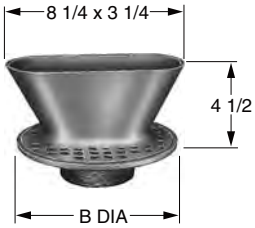

Suffix -F19

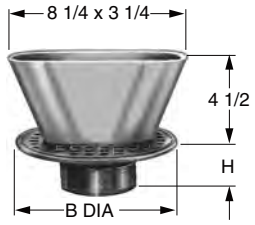

Suffix -F20, -F21, -F22, -F23 & -F24

SUFFIX NUMBER	TOP SIZE B DIA	H	PB TOP	†NB TOP	CP TOP	APPROX. WEIGHT LBS
-F19	8"	2 1/2	**1,940.00**	**2,155.00**	**2,369.00**	8
-F20	6"	2	**1,481.00**	**1,639.00**	**1,797.00**	9
-F21	7"	2 1/4	**1,630.00**	**1,759.00**	**1,933.00**	10
-F22	8"	2 1/2	**1,840.00**	**1,979.00**	**2,179.00**	11
-F23	9"	2 1/2	**2,214.00**	**2,375.00**	**2,606.00**	14
-F24	10"	2 3/4	**2,214.00**	**2,375.00**	**2,606.00**	16

†REGULARLY FURNISHED

OPTIONAL ADJUSTABLE STRAINER HEADS

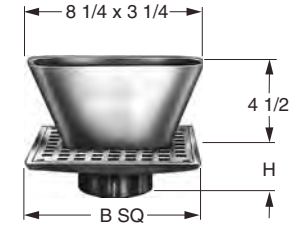

Suffix -F25, -F26, -F27, -F28 & -F29

SUFFIX NUMBER	TOP SIZE B SQ	H	PB TOP	†NB TOP	CP TOP	APPROX. WEIGHT LBS
-F25	6" x 6"	2	**1,674.00**	**1,803.00**	**1,983.00**	9
-F26	7" x 7"	2 1/4	**1,835.00**	**1,985.00**	**2,185.00**	10
-F27	8" x 8"	2 1/2	**2,010.00**	**2,220.00**	**2,430.00**	12
-F28	9" x 9"	2 1/2	**2,350.00**	**2,575.00**	**2,829.00**	14
-F29	10" x 10"	2 3/4	**2,783.00**	**3,013.00**	**3,314.00**	17

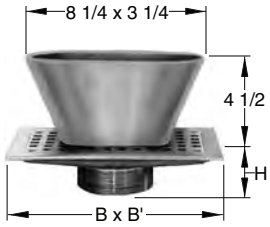

Suffix -F30, -F31, -F32, -F33, -F34 & F35

SUFFIX NUMBER	TOP SIZE B x B'	H	PB TOP	†NB TOP	CP TOP	APPROX. WEIGHT LBS
-F30	4 1/4" x 8"	2 1/2	**2,057.00**	**2,237.00**	**2,452.00**	9
-F31	4" x 12"	2 1/2	**2,231.00**	**2,516.00**	**2,762.00**	14
-F32	5" x 9"	2 1/4	**2,057.00**	**2,237.00**	**2,452.00**	9
-F33	5" x 13"	3	**2,471.00**	**2,722.00**	**3,067.00**	14
-F34	6" x 10"	2 1/4	**2,470.00**	**2,722.00**	**2,989.00**	14
-F35	5" x 17"	3	**2,588.00**	**2,839.00**	**3,121.00**	19

Suffix -F37 & -F38

SUFFIX NUMBER	TOP SIZE B DIA	H	DUCO CI	PB TOP	†NB TOP	CP TOP	APPROX. WEIGHT LBS
-F37	7"	3 1/4	**442.00**	**1,067.00**	**1,187.00**	**1,306.00**	10
-F38	9"	3 1/2	**607.00**	**1,602.00**	**1,765.00**	**1,936.00**	13

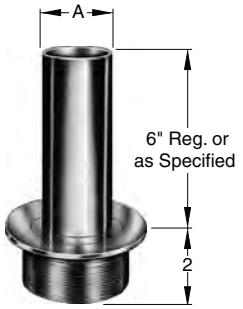

Suffix -F40 & -F41

SUFFIX NUMBER	A SIZE	STANDPIPE HEIGHT	PB TOP	†NB TOP	CP TOP	APPROX. WEIGHT LBS
-F40	2"	6"	**1,403.00**	**1,784.00**	**2,021.00**	10
For ea additional 1" Height			**123.00**	**174.00**	**185.00**	
-F41	3"	6"	**2,176.00**	**2,416.00**	**2,699.00**	13
For ea additional 1" Height			**215.00**	**246.00**	**264.00**	

FIG. 3580, 3581, 3590, 3591 FUNNEL ASSEMBLIES ONLY

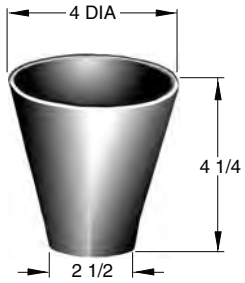

Fig. 3580

Fig. 3590

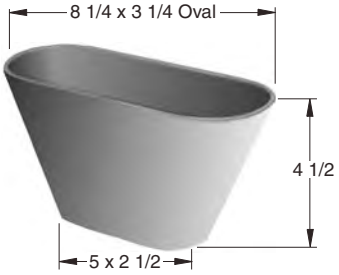

Fig. 3591

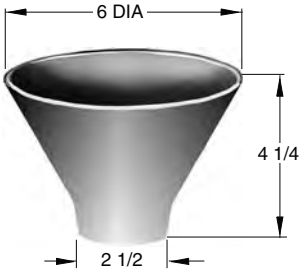

Fig. 3581

FIG. NO.	DESCRIPTION	†CI	GALV	ARC CI	RB	PB	NB	CP
3580	4" x 4 1/2"	**228.00**	**307.00**	**492.00**	**389.00**	**468.00**	**550.00**	**598.00**
3581	6" x 4 1/4"	**366.00**	**492.00**	**626.00**	**642.00**	**725.00**	**811.00**	**886.00**
3590	6" x 2 1/2" x 1"	**228.00**	**297.00**	**489.00**	**388.00**	**467.00**	**545.00**	**595.00**
3591	8 1/4" x 3 1/4" x 4 1/2"	**545.00**	**633.00**	**812.00**	**886.00**	**1,050.00**	**1,128.00**	**1,239.00**

OPTIONS: **ADD**

Male Threaded Funnel (Fig. 3580).....**123.00**

†REGULARLY FURNISHED

FIG. 3610, 3615, 3650, 3655 FUNNEL-CEPTOR® INDIRECT WASTE DRAINS, BOTTOM OUTLET, ADJ. ROUND TOP AND ROUND FUNNEL
FIG. 3620, 3625, 3660, 3665 FUNNEL-CEPTOR® INDIRECT WASTE DRAINS, SIDE OUTLET, ADJ. ROUND TOP AND OVAL FUNNEL

FUNCTION: Used to receive the drip, condensate or waste water from indirect waste lines. The funnel prevents splashing and directs the waste into the drain. The exposed portion of grate serves as drain for any other waste on the floor. The funnel is attached to the grate by means of concealed screws and it may be moved to any grate location desired. Round or oval funnel is recommended for single pipe use only. Adjustable top permits accurate positioning of the grate, as necessary, to meet the finished floor level.

Fig. 3610, 3615

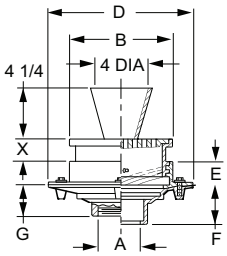

Fig. 3650, 3655

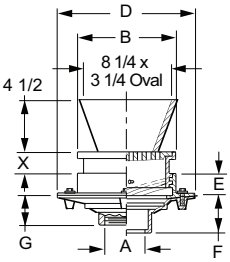

Fig. 3620, 3625

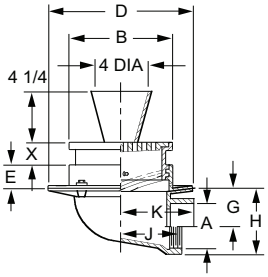

Fig. 3660, 3665

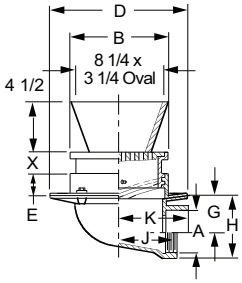

OUTLET VARIATIONS (Specify type of outlet and pipe size in inches.)

Outlet Type	Outlet Designation Outlet Type/Pipe Size	ADD
Speedi-Set SW	L02, L03, L04 Bottom Outlet Drains	**N/C**
Speedi-Set XH	LXH02, LXH03, LXH04 Bottom Outlet Drains	**N/C**
Threaded	T02, T03, T04, T05, T06 Bottom Outlet Drains	**99.00**
	For Side Outlet Drains	**N/C**
No-Hub	Y02, Y03, Y04 Bottom Outlet Drains	**N/C**
	8 1/2" Side Outlet Drains	**See Fig. 2646Y**
	Y02, Y03, Y04 12" Side Outlet Drains	**N/C**
	Y05, Y06 12" Side Outlet Drains	**See Fig. 2646Y**

Δ 6" Outlets only available w/12" Tops.

OPTIONS:		ADD
-B	Sediment Bucket for 8 1/2" Drains	**177.00**
	for 12" Drains	**327.00**
-P	Trap Primer Connection	**210.00**
-SG	Secured Grate	**188.00**
-U	Vandal Proof Screws	**188.00**

FIG. NO.	A OUTLET SIZE	B DIA TOP SIZE	D DIA	E	F	G THD	*X MIN MAX	FREE AREA SQ IN	DUCO †CI TOP	PB TOP	NB TOP	CP TOP	APPROX. WEIGHT LBS.
3610	02", 03", 04"	8 1/2	11 1/2	2	3 3/4	2	1 1/4 2 3/4	14.25	**1,140.00**	**1,951.00**	**2,075.00**	**2,360.00**	33
3615	02", 03", 04"	12	15 1/4	2 1/2	5	3 3/4	1 5/8 2 7/8	28.5	**2,405.00**	**3,482.00**	**3,697.00**	**3,734.00**	58
3615	05", 06"Δ	12	15 1/4	2 1/2	5	3 3/4	1 5/8 2 7/8	28.5	**2,405.00**	**3,482.00**	**3,697.00**	**3,734.00**	58
3650	02", 03", 04"	8 1/2	11 1/2	2	3 3/4	2	1 1/4 2 3/4	14.25	**1,461.00**	**2,524.00**	**2,738.00**	**2,998.00**	33
3655	02", 03", 04"	12	15 1/4	2 1/2	5	3 3/4	1 5/8 2 7/8	28.5	**2,729.00**	**4,060.00**	**4,278.00**	**4,375.00**	58
3655	05", 06"Δ	12	15 1/4	2 1/2	5	3 3/4	1 5/8 2 7/8	28.5	**2,729.00**	**4,060.00**	**4,278.00**	**4,375.00**	58

*Add 1/4" when bronze top is specified.
Δ6" Outlets only available w/12" Tops.

FIG. NO.	A OUTLET SIZE	B DIA TOP SIZE	D DIA	E	G	H	J	K	X MIN MAX	FREE AREA SQ IN	DUCO †CI TOP	PB TOP	NB TOP	CP TOP	APPROX. WEIGHT LBS.
3620	02"	8 1/2	12	2	4 1/4	6	4	5 1/2	1 1/4 2 3/4	14.25	**1,692.00**	**2,503.00**	**2,714.00**	**2,963.00**	33
3620	03"	8 1/2	12	2	3 3/4	6	4	5 1/2	1 1/4 2 3/4	14.25	**1,692.00**	**2,503.00**	**2,714.00**	**2,963.00**	33
3620	04"	8 1/2	12	2	3 1/4	6	4	5 1/2	1 1/4 2 3/4	14.25	**1,692.00**	**2,503.00**	**2,714.00**	**2,963.00**	33
3625	02"	12	15 1/4	2 1/2	6 1/2	9	6	6 3/4	1 5/8 2 7/8	28.5	**2,671.00**	**3,748.00**	**3,963.00**	**4,263.00**	58
3625	03"	12	15 1/4	2 1/2	6	9	6	6 3/4	1 5/8 2 7/8	28.5	**2,671.00**	**3,748.00**	**3,963.00**	**4,263.00**	58
3625	04"	12	15 1/4	2 1/2	5 1/2	9	6	6 3/4	1 5/8 2 7/8	28.5	**2,671.00**	**3,748.00**	**3,963.00**	**4,263.00**	58
3625	05"	12	15 3/4	2 1/2	5	9	6 3/4	7 3/4	1 5/8 2 7/8	28.5	**2,671.00**	**3,748.00**	**3,963.00**	**4,263.00**	58
3625	06"	12	15 3/4	2 1/2	4	9	6 3/4	7 3/4	1 5/8 2 7/8	28.5	**2,671.00**	**3,748.00**	**3,963.00**	**4,263.00**	58
3660	02"	8 1/2	12	2	4 1/2	6	4	5 1/2	1 1/4 2 3/4	14.25	**2,019.00**	**3,082.00**	**3,296.00**	**3,611.00**	33
3660	03"	8 1/2	12	2	3 3/4	6	4	5 1/2	1 1/4 2 3/4	14.25	**2,019.00**	**3,082.00**	**3,296.00**	**3,611.00**	33
3660	04"	8 1/2	12	2	3 1/4	6	4	5 1/2	1 1/4 2 3/4	14.25	**2,019.00**	**3,082.00**	**3,296.00**	**3,611.00**	33
3665	02"	12	15 1/4	2 1/2	6 7/8	9	6	6 3/4	1 5/8 2 7/8	28.5	**2,992.00**	**4,323.00**	**4,541.00**	**4,903.00**	58
3665	03"	12	15 1/4	2 1/2	6 3/8	9	6	6 3/4	1 5/8 2 7/8	28.5	**2,992.00**	**4,323.00**	**4,541.00**	**4,903.00**	58
3665	04"	12	15 1/4	2 1/2	5 7/8	9	6	6 3/4	1 5/8 2 7/8	28.5	**2,992.00**	**4,323.00**	**4,541.00**	**4,903.00**	58
3665	05"	12	15 3/4	2 1/2	5	9	6 3/4	7 3/4	1 5/8 2 7/8	28.5	**2,992.00**	**4,323.00**	**4,541.00**	**4,903.00**	58
3665	06"	12	15 3/4	2 1/2	4 1/2	9	6 3/4	7 3/4	1 5/8 2 7/8	28.5	**2,992.00**	**4,323.00**	**4,541.00**	**4,903.00**	58

REGULARLY FURNISHED: Duco Cast Iron Flanged Receptor and Flashing Collar with Adjustable Top, Bar Grate and Funnel.

†REGULARLY FURNISHED

FIG. 3710, 3715 3750, 3755 FUNNEL-CEPTOR® INDIRECT WASTE DRAINS, BOTTOM OUTLET, ROUND TOP AND ROUND FUNNEL
FIG. 3720, 3725 3760, 3765 FUNNEL-CEPTOR® INDIRECT WASTE DRAINS, SIDE OUTLET, ROUND TOP AND OVAL FUNNEL

FUNCTION: Used to receive the drip, condensate or waste water from indirect waste lines. The funnel prevents splashing and directs the waste into the drain. The exposed portion of grate serves as drain for any other waste on the floor. The funnel is attached to the grate by means of concealed screws and it may be moved to any grate location desired. Round or oval funnel is recommended for single pipe use only. Adjustable top permits accurate positioning of the grate, as necessary, to meet the finished floor level.

Fig. 3710, 3715

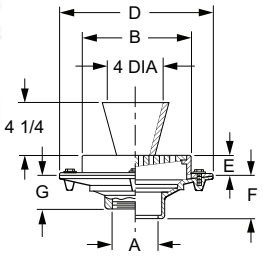

Fig. 3750, 3755

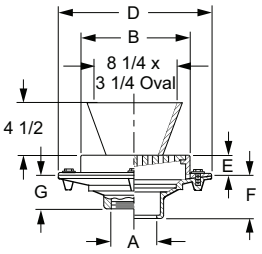

Fig. 3720, 3725

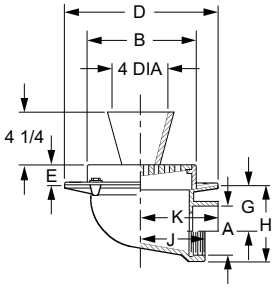

Fig. 3760, 3765

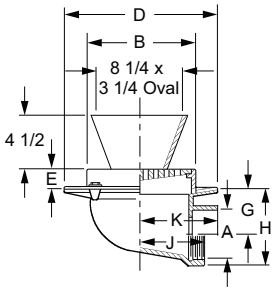

OUTLET VARIATIONS (Specify type of outlet and pipe size in inches.)

Outlet Type	Outlet Designation Outlet Type/Pipe Size	ADD
Speedi-Set SW	L02, L03, L04 Bottom Outlet Drains	**N/C**
Speedi-Set XH	LXH02, LXH03, LXH04 Bottom Outlet Drains	**N/C**
Threaded	T02, T03, T04, T05, T06 Bottom Outlet Drains	**99.00**
	For Side Outlet Drains	**N/C**
No-Hub	Y02, Y03, Y04 Bottom Outlet Drains	**N/C**
	8 1/2" Side Outlet Drains	**See Fig. 2646Y**
	Y02, Y03, Y04 12" Side Outlet Drains	**N/C**
	Y05, Y06 12" Side Outlet Drains	**See Fig. 2646Y**

Δ 6” Outlets only available w/12” Tops.

OPTIONS:		ADD
-B	Sediment Bucket for 8 1/2" Drains	**177.00**
	for 12" Drains	**238.00**
-P	Trap Primer Connection	**210.00**
-SG	Secured Grate	**188.00**
-U	Vandal Proof Screws	**188.00**

FIG. NO.	A OUTLET SIZE	B DIA TOP SIZE	D DIA	E	F	G THD	FREE AREA SQ IN	DUCO †CI TOP	PB TOP	NB TOP	CP TOP	APPROX. WEIGHT LBS.
3710	02", 03", 04"	8 1/2	11 1/2	2	3 3/4	2	14.25	**877.00**	**1,688.00**	**1,899.00**	**2,077.00**	33
3715	02", 03", 04"	12	15 1/4	2 1/2	5	3 3/4	28.5	**1,566.00**	**2,643.00**	**2,858.00**	**3,137.00**	58
3715	05", 06"Δ	12	15 1/4	2 1/2	5	3 3/4	28.5	**1,566.00**	**2,643.00**	**2,858.00**	**3,137.00**	58
3750	02", 03", 04"	8 1/2	11 1/2	2	3 3/4	2	14.25	**1,200.00**	**2,263.00**	**2,477.00**	**2,714.00**	33
3755	02", 03", 04"	12	15 1/4	2 1/2	5	3 3/4	28.5	**1,891.00**	**3,222.00**	**3,440.00**	**3,782.00**	58
3755	05", 06"Δ	12	15 1/4	2 1/2	5	3 3/4	28.5	**1,891.00**	**3,222.00**	**3,440.00**	**3,782.00**	58

*Add 1/4" when bronze top is specified.

Δ 6” Outlets only available w/12” Tops.

FIG. NO.	A OUTLET SIZE	B DIA TOP SIZE	D DIA	E	G	H	J	K	FREE AREA SQ IN	DUCO †CI TOP	PB TOP	NB TOP	CP TOP	APPROX. WEIGHT LBS.
3720	02"	8 1/2	12	2	4 1/4	6	4	5 1/2	14.25	**1,431.00**	**2,242.00**	**2,453.00**	**2,687.00**	33
3720	03"	8 1/2	12	2	3 3/4	6	4	5 1/2	14.25	**1,431.00**	**2,242.00**	**2,453.00**	**2,687.00**	33
3720	04"	8 1/2	12	2	3 1/4	6	4	5 1/2	14.25	**1,431.00**	**2,242.00**	**2,453.00**	**2,687.00**	33
3725	02"	12	15 1/4	2 1/2	6 7/8	9	6	6 3/4	28.5	**2,414.00**	**3,491.00**	**3,571.00**	**3,839.00**	58
3725	03"	12	15 1/4	2 1/2	6 3/8	9	6	6 3/4	28.5	**2,414.00**	**3,491.00**	**3,571.00**	**3,839.00**	58
3725	04"	12	15 1/4	2 1/2	5 7/8	9	6	6 3/4	28.5	**2,414.00**	**3,491.00**	**3,571.00**	**3,839.00**	58
3725	05"	12	15 3/4	2 1/2	5	9	6 3/4	7 3/4	28.5	**2,414.00**	**3,491.00**	**3,571.00**	**3,839.00**	58
3725	06"	12	15 3/4	2 1/2	4	9	6 3/4	7 3/4	28.5	**2,414.00**	**3,491.00**	**3,571.00**	**3,839.00**	58
3760	02"	8 1/2	12	2	4 1/4	6	4	5 1/2	14.25	**1,749.00**	**2,812.00**	**3,026.00**	**3,327.00**	33
3760	03"	8 1/2	12	2	3 3/4	6	4	5 1/2	14.25	**1,749.00**	**2,812.00**	**3,026.00**	**3,327.00**	33
3760	04"	8 1/2	12	2	3 1/4	6	4	5 1/2	14.25	**1,749.00**	**2,812.00**	**3,026.00**	**3,327.00**	33
3765	02"	12	15 1/4	2 1/2	6 7/8	9	6	6 3/4	28.5	**2,736.00**	**4,067.00**	**4,285.00**	**4,479.00**	58
3765	03"	12	15 1/4	2 1/2	6 3/8	9	6	6 3/4	28.5	**2,736.00**	**4,067.00**	**4,285.00**	**4,479.00**	58
3765	04"	12	15 1/4	2 1/2	5 7/8	9	6	6 3/4	28.5	**2,736.00**	**4,067.00**	**4,285.00**	**4,479.00**	58
3765	05"	12	15 3/4	2 1/2	5	9	6 3/4	7 3/4	28.5	**2,736.00**	**4,067.00**	**4,285.00**	**4,479.00**	58
3765	06"	12	15 3/4	2 1/2	4 1/2	9	6 3/4	7 3/4	28.5	**2,736.00**	**4,067.00**	**4,285.00**	**4,479.00**	58

REGULARLY FURNISHED: Duco Cast Iron Flanged Receptor, Bar Grate and Funnel.

†REGULARLY FURNISHED

FIG. 3811 SERIES, 3821 SERIES DRIP AND CONDENSATE FUNNELS

FUNCTION: Ideal for hospitals and industrial laboratories where indirect waste lines above the floor require receptors to receive drip, condensate or waste water. Use of "P" trap recommended for preventing sewer gases from entering room.

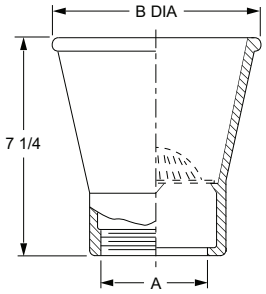

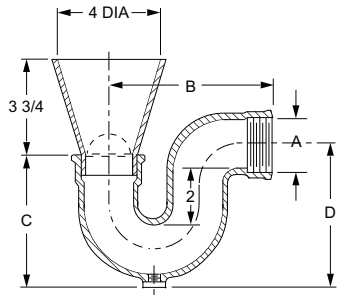

OUTLET VARIATIONS (Specify type of outlet and pipe size in inches.)

Outlet Type	Outlet Designation Outlet Type/Pipe Size	ADD
Threaded	T02, T03, T04, T05, T06 (3811 thru 3814 only)	**126.00**
No-Hub	Y02, Y03, Y04, Y05 , Y06	**See Fig. 2646Y for list add to Threaded body price**

OPTIONS:		ADD
-DBS	Aluminum Dome Bottom Strainer	**150.00**
-DBS	ARC CI DBS Figs 3811 or 3821	**147.00**
-DBS	Duco CI DBS Figs 3812 or 3822	**112.00**
-DBS	Cast Bronze DBS Figs 3813 or 3823	**147.00**
-DBS	Chrome Plated DBS Figs 3814 or 3824	**271.00**
-FC	Front Cleanout (Trap Series Only)	**N/C**
-NB	4" Dia NB Funnel w/Bronze Trap (Add to 3823)	**76.00**
-NB6	6" Dia NB Funnel w/Bronze Trap (Add to 3823)	**339.00**

FUNNEL ONLY - REGULARLY FURNISHED CAULK OUTLET

FIG. NO	DESCRIPTION	A PIPE SIZE 02"	03"	04"	06"
3811	Cast Iron with ARC Interior & Exterior	**886.00**	**968.00**	**1,369.00**	**1,409.00**
3812	Duco Cast Iron	**485.00**	**566.00**	**968.00**	**1,004.00**
3813	Cast Bronze	**1,151.00**	**1,205.00**	**2,556.00**	**3,442.00**
3814	Polished Chrome Plated Cast Bronze	**1,327.00**	**1,391.00**	**2,736.00**	**3,803.00**
B DIA		6	7	8	10
APPROX WT. LBS.		6	8	10	10

FUNNEL WITH TRAP - THREADED OUTLET ONLY

FIG. NO	DESCRIPTION	A PIPE SIZE 0150"	02"	03"	ADD FOR 6" DIA FUNNEL
3821	Cast Iron with ARC Interior & Exterior	**889.00**	**1,299.00**	**1,500.00**	**139.00**
3822	Duco Cast Iron	**566.00**	**933.00**	**1,092.00**	**139.00**
3823	Cast Bronze	**1,669.00**	**1,669.00**	**2,721.00**	**260.00**
3824	Polished Chrome Plated Cast Bronze	**2,575.00**	**2,575.00**	**3,148.00**	**285.00**
B		6	6	6	
C		5	5	6	
D		5 1/2	5 1/2	6	
APPROX WT. LBS.		9	9	13	2

REGULARLY FURNISHED: As described by Figure Number.

†REGULARLY FURNISHED

FIG. 3950, 3951, 3955 FIXED AIR GAPS, THREADED, NO-HUB OR SPIGOT OUTLET

FUNCTION: When installed between the fixture waste outlet and the plumbing drainage system, SMITH Fixed Air Gaps provide protection of fixtures such as food processing equipment, kitchen fixtures, storage tanks, etc., from contamination due to back flow in the drain line. (Air Gap fittings in plumbing waste lines are installed on the house side of the fixture trap.) SMITH Fixed Air Gaps when installed in the water supply to a fixture or appliance, such as evaporative coolers, sterilizers, etc., will prevent contamination from cross connection between the potable water supply and the fixture that handles a contaminating liquid or one that is connected to a plumbing waste line. Local codes should be checked.

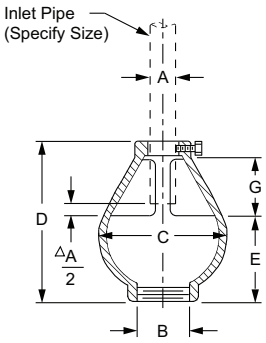

Fig. 3950T
THREADED OUTLET ONLY
(Specify A + B)

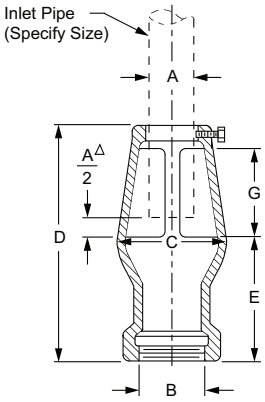

Fig. 3951T
THREADED OUTLET ONLY
(Specify A + B)

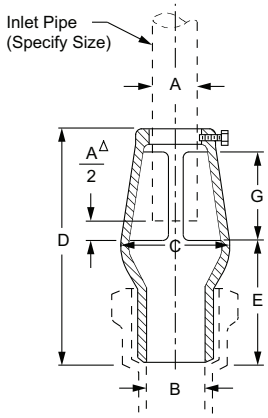

Fig 3955S
NO-HUB OR SPIGOT OUTLET
(Specify A + B)

FIG. NO.	A INLET SIZE	B OUTLET SIZE	C	D	E	G	DUCO †CI TOP	GALV CI (G)	CAST BRONZE (CB)	APPROX. WEIGHT LBS.
3950	0250"	075"	3	3	1 3/4	1	**400.00**	**664.00**	**476.00**	2
3950	050"	075"	4 1/4	5 1/2	3	2	**400.00**	**664.00**	**476.00**	2
3950	050"	01"	4 1/4	5 1/2	3	2	**440.00**	**704.00**	**516.00**	2
3950	075"	0150"	4 1/4	5 1/2	3	2	**556.00**	**820.00**	**839.00**	2 1/2
3950	01"	0150"	4 1/4	5 1/2	3	2	**556.00**	**820.00**	**839.00**	2 1/2
3951	01"	02"	3 1/2	8	4 1/4	3	**442.00**	**706.00**	**857.00**	4
3951	0125"	02"	3 1/2	8	4 1/4	3	**442.00**	**706.00**	**857.00**	4
3951	0150"	02”	3 1/2	8	4 1/4	3	**442.00**	**706.00**	**857.00**	4
3951	02"	03"	4 1/2	11 1/2	6 1/2	4	**540.00**	**804.00**	**1,290.00**	10
3951	03"	04"	6 1/2	15 1/2	8	6	**739.00**	**1,003.00**	**2,400.00**	19
3951	04"	06"	8 1/2	20	10	8	**1,511.00**	**1,775.00**	**4,631.00**	33
3955	01"	02"	3 1/2	8	4 1/4	3	**386.00**	**650.00**	**851.00**	4
3955	0125"	02"	3 1/2	8	4 1/4	3	**386.00**	**650.00**	**851.00**	4
3955	0150"	02”	3 1/2	8	4 1/4	3	**386.00**	**650.00**	**851.00**	4
3955	02"	03"	4 1/2	11 1/2	6 1/2	4	**467.00**	**731.00**	**1,304.00**	8
3955	03"	04"	6 1/2	15 1/2	8	6	**687.00**	**951.00**	**1,683.00**	19
3955	04"	06"	8 1/2	20	10	8	**1,609.00**	**1,873.00**	**4,549.00**	33

$\Delta \frac{A}{2}$ = 1/2 Dia. of Inlet Pipe MIN

REGULARLY FURNISHED: Duco Cast Iron.

†REGULARLY FURNISHED

FIG. 3960, 3970, 3980, ROOF-CEPTOR® INDIRECT WASTE DRAINS, MEDIUM DEPTH RECEPTORS

FUNCTION: Recommended for use in roof areas to receive waste water from air conditioning units, cooling towers and other mechanical equipment installed on the roof. The solid water dam prevents storm water from entering the waste line. The large dome bottom strainer provides ample drainage and prevents entry of debris.

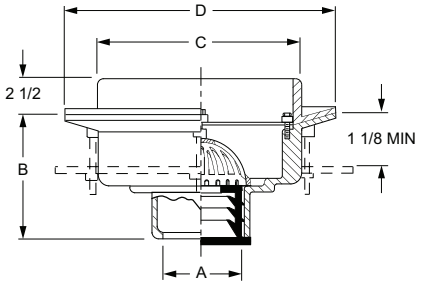

FIG. NO.	A OUTLET SIZE	C DIA. TOP SIZE	D DIA. FLANGE SIZE	†DUCO CI	GALV CI	APPROX. WEIGHT LBS
3960	02, 03, 04"	7 1/4"	8 1/2"	**760.00**	**1,012.00**	16
3970	02, 03, 04"	10 1/2"	12"	**924.00**	**1,431.00**	28
3970	05, 06"	10 1/2"	12"	**924.00**	**1,431.00**	30
3980	02, 03, 04"	12 1/2"	15 1/4"	**1,204.00**	**2,433.00**	37
3980	05, 06"	12 1/2"	15 1/4"	**1,612.00**	**2,841.00**	-

REGULARLY FURNISHED: Duco Cast Iron Receptor with Solid Water Dam and Cast Iron Dome Bottom Strainer.

OUTLET VARIATIONS (Specify type of outlet and pipe size in inches.)

Outlet Type	Outlet Designation Outlet Type/Pipe Size	"B" Body HT. DIM.	ADD
Inside Caulk	C02, C03, C04 (3960)	5 1/2"	**N/C**
	C02, C03, C04, C05, C06 (3970)	6"	**N/C**
	C02, C03, C04, C05, C06 (3980)	5"	**N/C**
Speedi-Set SW	L02, L03, L04 (3960)	5 1/2"	**N/C**
	L02, L03, L04 (3970)	6"	**N/C**
	L02, L03, L04 (3980)	5"	**N/C**
Speedi-Set XH	LXH02, LXH03, LXH04 (3960)	5 1/2"	**N/C**
	LXH02, LXH03, LXH04 (3970)	6"	**N/C**
	LXH02, LXH03, LXH04 (3980)	5"	**N/C**
Threaded	T02, T03, T04 (3960)	4 1/4"	**99.00**
	T02, T03, T04, T05, T06 (3970)	4 3/4"	**99.00**
	T02, T03, T04, T05, T06 (3980)	3 3/4"	**99.00**
No-Hub	Y02, Y03, Y04 (3960)	5 1/2"	**N/C**
	Y02, Y03, Y04, Y05, Y06 (3970)	6"	**N/C**
	Y02, Y03, Y04, Y05, Y06 (3980)	5"	**N/C**

OPTIONS:		ADD
-E	Extension, per inch, up to 4" (3960, 3970)	**108.00**
	Extension, up to 4" (3980)	**849.00**
	per inch over 4"	**202.00**
-C	Underdeck Clamp (3960, 3970)	**191.00**
	Underdeck Clamp (3980)	**310.00**
-R	Sump Receiver (3960, 3970)	**327.00**
	Sump Receiver (3980)	**345.00**

†REGULARLY FURNISHED

NOTES

CLEANOUTS AND ACCESS COVERS

ADJUSTABLE FLOOR CLEANOUTS

Fig. 4020

Fig. 4031

Fig. 4040

Fig. 4051

Fig. 4100

Fig. 4111

Fig. 4120

Fig. 4131

Fig. 4140

Fig. 4151

Fig. 4160

Fig. 4171

Fig. 4180

Fig. 4191

Fig. 4200

Fig. 4211

Fig. 4220

Fig. 4231

Fig. 4240

Fig. 4237

Fig. 4250

Fig. 4261

Fig. 4280

Fig. 4291

NON-ADJUSTABLE FLOOR CLEANOUTS

Fig. 4313

Fig. 4318

Fig. 4333

Fig. 4338

Fig. DX4343

FERRULES WITH ACCESS COVERS

Fig. 4402

Fig. 4422

Fig. 4430

Fig. 4431

Fig. 4432

CLEANOUTS AND ACCESS COVERS

FERRULES WITH ACCESS COVERS

Fig. 4433

Fig. 4434

Fig. 4435

Fig. 4436

Fig. 4437

CLEANOUT TEES

Fig. 4452

Fig. 4472

Fig. 4505

Fig. 4510

Fig. 4530

CLEANOUT TEES

Fig. 4550

Fig. 4555

Fig. 4710

Fig. 4715

WALL ACCESS COVERS

Fig. 4720

Fig. 4725

Fig. 4730

Fig. 4735

Fig. 4740

Fig. 4745

ACCESS DOORS

Fig. 4760 Series

Fig. 4770 Series

Fig. 4780 Series

FLOOR ACCESS COVERS

Fig. 4810

Fig. 4890

Fig. DX4890

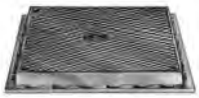
Fig. 4910

Fig. 4915

Fig. 4930

Fig. 4940

ORDERING GUIDELINES

4000 SERIES

After identifying the proper options required to meet the engineering specification, place order as shown below:

Examples:

4020S04 (-F-C-U)

- Figure No.
- Type of Outlet (Spigot)
- Pipe Size (Inches)
- Flashing Flange with Flashing Clamp
- Vandal Proof

*All variation suffixes are to be shown in parenthesis.

Drain Outlet Types:

C Caulk Outlet
T Threaded Outlet
Y NO-HUB Outlet
L Speedi-Set Service Weight (02, 03 & 04" sizes only)
LXH Speedi-Set Extra Heavy (02, 03 & 04" sizes only)

Example: Pipe Size (Inches)

02 - 2"
03 - 3"
04 - 4"
etc.

ADJUSTABLE FLOOR-LEVEL CLEANOUTS TECHNICAL DATA

HOW TO SELECT A FLOOR CLEANOUT

To make the proper "Cleanout Assembly" selection, the following steps are recommended.

SELECTION OF TOP	SELECTION OF BODY	SELECTION OF CLOSURE PLUG
Shape		
Style		
Traffic Function	Outlet Type	Ease Of Removal
Material	Body Type	Type Of Seal

SELECTION OF TOP

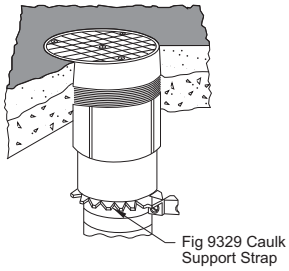

Fig. 1 Round Nickel Bronze Top

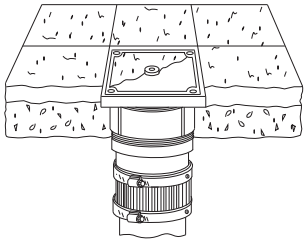

Fig. 2 Square Nickel Bronze Top with Tile Recess

Shape - The first step is to select a top which is compatible with the surrounding area. The exposed tops of floor-level cleanouts are considered as pieces of architectural trim. All Smith tops are carefully engineered for easy, fast and safe cover removal for quick access to the closure plug. Cleanout tops should be of the correct shape to blend with the surrounding floor and wall area.

A round top (Fig. 1) is easiest to orient in most floors since it will not conflict with most floor designs or require alignment to adjacent walls.

The square nickel bronze top (Fig. 2) is particularly adaptable to floors that are finished with materials of a square or straight line pattern.

Style - All floors in areas or rooms which have finished decorative floors and walls, will require finished floor cleanouts. Examples are offices, hospitals, banks, showrooms and many modern manufacturing areas.

A regular secured nickel bronze scoriated top (Fig. 1) is recommended for most finished floor areas. Nickel bronze non-skid tops blend with most finished floors. In floors where a minimum amount of metal is desired to be shown, cleanout tops are available with a recess to receive the floor materials. Tops are available with a shallow depression to receive vinyl or similar types of floor tile (Fig. 2) or with a lock-in design to receive terrazzo or ceramic tile fill (Fig. 3). All three types of finished floor tops are available in round or square patterns.

Most floors are considered finished floors and nickel bronze tops are recommended; however, there are some areas such as boiler rooms, warehouses and heavy manufacturing areas which may use heavy duty, cast iron tops. In these areas, strength and utility are of prime importance and beauty is a secondary consideration.

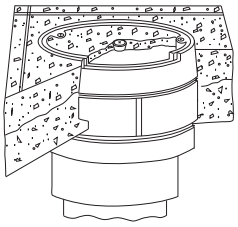

Fig. 3 Terrazzo Top

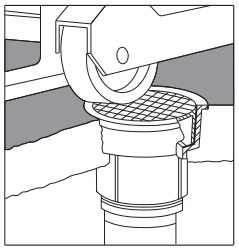

Fig. 4 Tractor-Type Heavy Duty Covers

Traffic Function - The top specified must be strong enough to safely carry the loads of anticipated traffic. The regular Smith nickel bronze top is a heavy duty design and can be used for all finished floor areas subject to foot and light vehicular traffic. For finished floors, where heavy traffic is anticipated, such as equipment showrooms, convention areas, etc., Smith offers heavy duty nickel bronze tops. For unfinished floors, subject to heavy vehicular traffic, round, heavy duty cast iron tops should be specified. Smith has available cast iron tops in heavy duty design and non-tilt tractor-type covers. The tractor-type cover (Fig. 4) cannot be tilted out of the cleanout top due to heavy vehicular traffic moving over it.

Material - For most finished floors, the Smith scoriated non-skid nickel bronze tops are recommended. Nickel bronze has excellent corrosion resistant qualities, is extremely serviceable, will not discolor and has an attractive surface. Nickel bronze tops will not rust stain the surrounding finished floor area as cast iron tops sometimes do. The "scuff-buff" action of foot traffic passing over a nickel bronze top will actually add to its appearance, giving it a soft silvery patina. Tops are available in special polished cast bronze, for use where tops must blend with other architectural trim.

SELECTION OF BODY

Outlet Type - Bodies which are used with adjustable floor-level cleanout assemblies are available with four types of outlet connections, spigot, Inside Caulk, NO-HUB and Speedi-Set which can be effectively used, depending on the type of connection desired for piping used in the system and compliance with plumbing code stipulations.

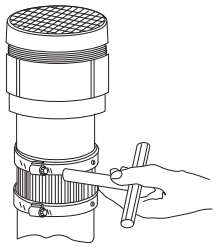

Fig. 5 NO-HUB Outlet Y

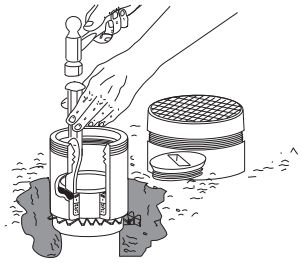

Fig. 6 Inside Caulk Outlet C

"NO HUB" outlet bodies (Fig. 5) are provided with a cut-off groove for added adjustment. Inside caulk outlet bodies (Fig. 6) are desirable when outside access to the joint is cramped or inaccessible. The inside caulk body also permits the use of bald end soil pipe pieces, thus effectively using random lengths of soil pipe without hub. Another advantage is that during the rough-in stage, odd lengths can be run up above the cut-off length and left until later. When cut-off elevation is finally established, these can then be snap-cut and the cleanout body caulked in place.

"Speedi-Set" cleanouts (Fig. 7) are the easiest type to install. The "Speedi-Set" Neoprene Gasket, will slide over a NO-HUB, Service Weight or Extra Heavy bald end soil pipe stub. Tops from Fig. 4020 thru 4250 series can be used with a "Speedi-Set" body to achieve the desired cleanout assembly.

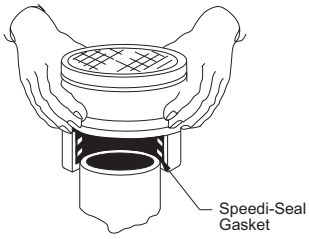

Fig. 7 Speedi-Set Body L

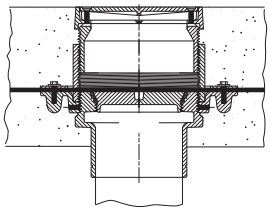

Fig. 8 With Flange -F and Flashing Clamp -C

Body Type - Occasionally cleanouts must be installed in areas where a continuous waterproof membrane is used. All variations of Smith Adjustable Floor-Level Cleanouts can be furnished with an integrally cast flange with a flashing clamp (Fig. 8). However, it must be noted that seepage control cannot be provided since cleanouts must be gas tight units. A flange is also desirable as it rigidly anchors the cleanout body in the concrete slab.

SELECTION OF CLOSURE PLUG

Ease of Removal - All Smith cleanout closures feature extra heavy plugs. The Smith countersunk type of design is regularly furnished and recommended. This type of plug has a slot sized to receive a piece of 1/2" bar stock, which eliminates the need for any special tools or wrenches (Fig. 9).

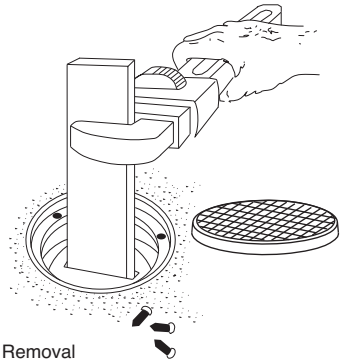

Fig. 9 Slotted Plug Removal

Type of Seal - All closures are gas tight and water tight. The gasket seal closure (Fig. 10) features a seal which is formed by the shoulder of the plug and the gasket seal. The taper thread type (Fig. 11) relies on the make up of the thread for the seal.

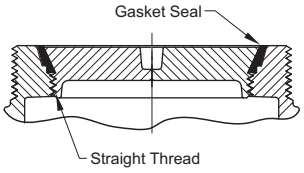

Fig. 10 Gasket Seal Closure

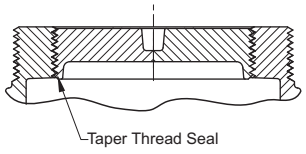

Fig. 11 Taper Thread Closure

FEATURES OF THE "TWIS-TO-FLOOR"® DESIGN

Smith engineers have designed a floor-level adjustable cleanout which features the "Twis-To-Floor"® concept (Fig. 12).

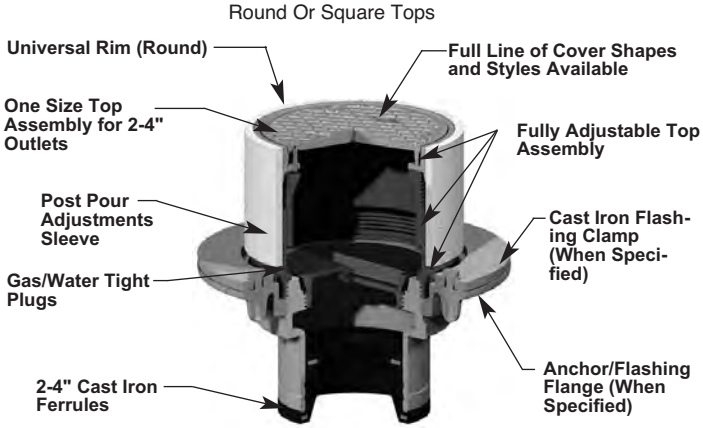

Fig. 12 The Twis-To-Floor® Cleanout

WIDE FLANGE CLEANOUTS

Prefix DX - Designates a wide flange that can be furnished on certain Smith Cleanouts. This flange receives and serves as a bonding base for the membranes and coatings of waterproof floor covering systems. These coverings consist of thin coatings which are applied in a series of trowel coats. The covering forms its own membrane, flashing and durable traffic surface. The wide DX flange is regularly furnished 4" in width. The usual covering is approximately 3/16" thick and may be applied over many subsurfaces such as concrete, gypsum or wood decks. Such coverings are particularly adaptable to areaways, plazas, floors and corridors.

When DX flange is required on cleanouts other than those shown in this section, the prefix DX must be used with the figure number and the lip dimension must be specified. If waterproof deck covering thickness is greater (or less) than 3/16, the lip dimension must be specified. Cleanout body should be set to compensate for the variation in thickness. Cleanout body should be set low enough to permit "dimpling" of area surrounding drain.

Illustrated is a typical waterproof traffic bearing floor covering installation and an example of the "dimpling" effect.

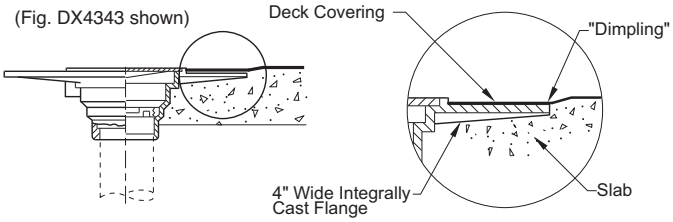

WOOD DECK INSTALLATION

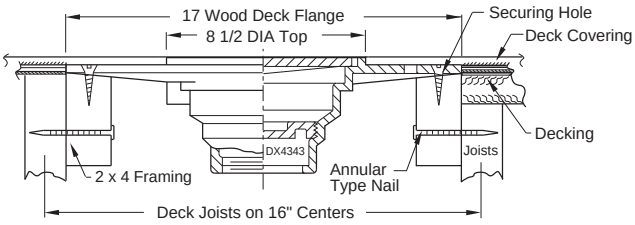

CARPETED FLOOR CLEANOUTS

Suffix -X - Carpet Clamping Frame (4020, 4025 and 4031 Series only). Adjustable cleanout assembly is installed with nickel bronze frame and secured cover flush with concrete slab (Fig. 13). This serves as a functional, safe, "Flush-with-Floor" cleanout, during period prior to carpet installation. Carpet is cut to fit around lower cleanout frame and cover is removed. Carpet is clamped against slab with "Carpet Clamping Frame." Cover is then installed and secured in clamping frame (Fig. 14).

INSTALLATION

STAGE 1

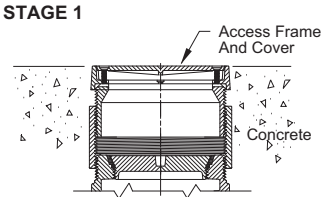

NOTE: Cover installed in lower frame at this stage.

Fig. 13

STAGE 2

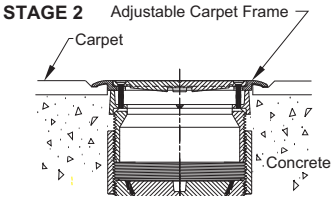

NOTE: Cover removed from stage No. 1 and used with carpet frame.

Fig. 14

Suffix -Y - Carpet cleanout Marker (Fig. 15) - Used with 4020 and 4025 series cleanouts, 1 1/2" diameter stainless steel marker serves as cleanout locator in carpeted floors. When access to drain line is required, marker locates cleanout. Carpet over cleanout is cut for accessibility to closure plug. After drain line is cleaned, carpet is replaced and marker re-installed.

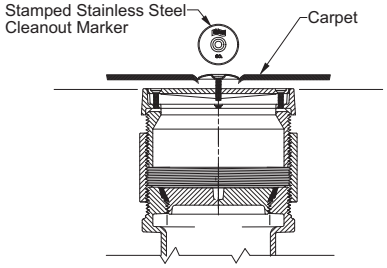

Fig. 15

NOTE: For additional Cleanout and Access Cover technical or application data go to our web site at www.jrsmith.com or contact your local Jay R. Smith Representative.

NOTES

FIG. 4020-4033 SERIES FINISHED FLOOR CLEANOUTS W/ADJUSTABLE ROUND MEDIUM DUTY TOPS

FUNCTION: For use in finished floors bearing foot and medium load wheeled traffic. Allows for easy floor level adjustment.

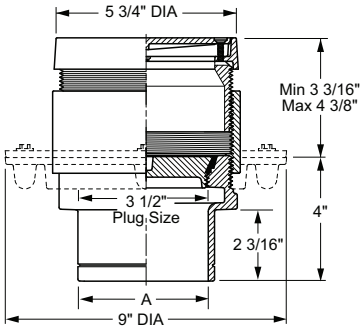

4020 SERIES

OPTIONS:

		ADD
-DX	Wide Flange	607.00
-F	Flashing Flange	N/C
-FC	Flange w/Flashing Clamp	137.00
-G	Galvanized CI	282.00
-IP	Iron Plug (In lieu of ABS)	123.00
-NBSS	Stainless Steel Top (2", 3" & 4" sizes)	694.00
-U	Vandal Proof Screws	123.00
-X	Carpet Clamping Type	366.00
-Y	Carpet Marker Type	99.00

REPLACEMENT COVERS:

	LIST
4020NBTOP4-NS	889.00
4020NBTOP6-NS	1,225.00
4020NBTOP4-NS-SS	1,587.00
4020PBTOP4-NS	739.00
4020PBTOP6-NS	1,140.00

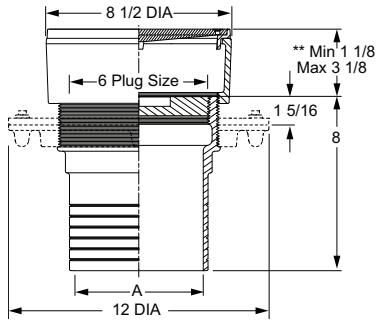

4023 SERIES

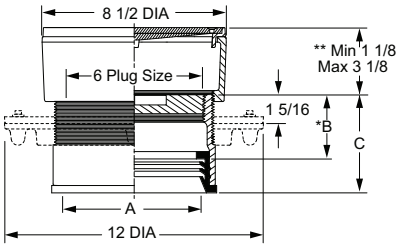

4033 SERIES

A SIZE	B	C
06	*3	4 9/16
08	*3 1/4	4 13/16

NOTE: When Flange -F is specified, Min. 1 1/8" becomes 1 5/8"

WITH ABS PLUG	SPIGOT• OUTLET	INSIDE CAULK OUTLET	SPEEDI-SET* OUTLET	A - OUTLET SIZE COVER MATERIAL	02"	03"	04"	◆05"	**06"	**08"
Gasket Seal Plug	4020S	4025C	4031L	†Nickel Bronze (-NB)	804.00	849.00	1,132.00	1,847.00	-	-
				Polished Bronze (-PB)	728.00	773.00	1,056.00	1,771.00	-	-
Taper Thread Plug	❖4024S	4029C	4034L	†Nickel Bronze (-NB)	804.00	849.00	1,132.00	1,847.00	-	-
				Polished Bronze (-PB)	728.00	773.00	1,056.00	1,771.00	-	-
WITH BRZ PLUG	**SPIGOT• OUTLET**	**INSIDE CAULK OUTLET**	**SPEEDI-SET* OUTLET**	**A - OUTLET SIZE COVER MATERIAL**	**02"**	**03"**	**04"**	**◆05"**	****06"**	****08"**
Gasket Seal Plug	4021S	4026C	4032L	†Nickel Bronze (-NB)	1,051.00	1,094.00	1,376.00	2,091.00	-	-
				Polished Bronze (-PB)	975.00	1,018.00	1,300.00	2,015.00	-	-
Taper Thread Plug	■4023S**		4033L**	†Nickel Bronze (-NB)	1,051.00	1,094.00	1,376.00	2,091.00	2,635.00	2,900.00
				Polished Bronze (-PB)	975.00	1,018.00	1,300.00	2,015.00	2,559.00	2,824.00
Taper Thread Plug		4028C		†Nickel Bronze (-NB)	1,051.00	1,094.00	1,376.00	-	-	-
				Polished Bronze (-PB)	975.00	1,018.00	1,300.00	-	-	-
				APPROX WT. LBS.	14	15	19	25	28	32

REGULARLY FURNISHED: Duco Cast Iron Cleanout with Round Adjustable Scoriated Secured Nickel Bronze Top. Closure Plug Type as Indicated By Figure Number Selected.

** 6 & 8" Available w/Bronze Taper Plug Only.
5, 6 & 8" Not Available w/Inside Caulk Outlet.
◆ 5" Available w/Spigot Outlet Only.
■ Same as 4024 W/Taper Thread Bronze Plug
❖ Same as 4023 W/Taper Thread ABS Plug
* Speedi-Set Outlet Available with 2, 3, 4, 6 or 8" Connection Only. Specify Service Weight (LXH) or PVC (LPVC). LPVC applies to 6" pipe size only.
• Spigot Ferrules are Suitable for use with No-Hub Connections.

†REGULARLY FURNISHED

FIG. 4040-4053 SERIES FINISHED FLOOR CLEANOUTS W/ADJUSTABLE SQUARE MEDIUM DUTY TOPS

FUNCTION: For use in finished floors bearing foot and medium load wheeled traffic. The square top is particularly adaptable to floors that are finished of material in straight line patterns. Allows for easy floor level adjustment.

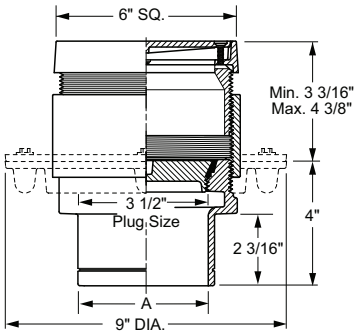

4040 Series

OPTIONS:		ADD
-DX	Wide Flange	607.00
-F	Flashing Flange	N/C
-FC	Flange w/Flashing Clamp	137.00
-G	Galvanized CI	282.00
-IP	Iron Plug (In lieu of ABS)	123.00
-U	Vandal Proof Screws	123.00
-Y	Carpet Marker Type	99.00

REPLACEMENT COVERS:	LIST
4040NBTOP4-NS	889.00
4040NBTOP6-NS	1,225.00
4040PBTOP4-NS	739.00
4040PBTOP6-NS	1,140.00

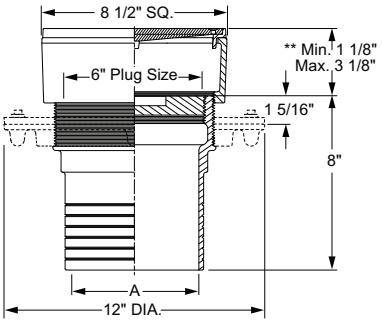

4043 Series

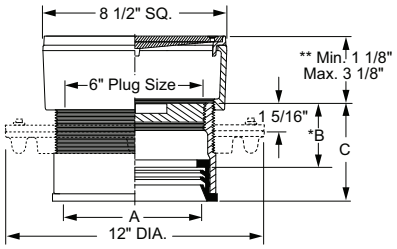

4053 Series

A SIZE	B	C
06	*3	4 9/16
08	*3 1/4	4 13/16

NOTE: When Flange -F is specified, Min. 1 1/8" becomes 1 5/8"

WITH ABS PLUG	SPIGOT• OUTLET	INSIDE CAULK OUTLET	SPEEDI-SET* OUTLET	A - OUTLET SIZE						
				COVER MATERIAL	02"	03"	04"	◆05"	**06"	**08"
Gasket Seal Plug	4040S	4045C	4051L	†Nickel Bronze (-NB)	804.00	849.00	1,132.00	1,847.00	-	-
				Polished Bronze (-PB)	728.00	773.00	1,056.00	1,771.00	-	-
Taper Thread Plug	4044S	4049C	4054L	†Nickel Bronze (-NB)	804.00	849.00	1,132.00	1,847.00	-	-
				Polished Bronze (-PB)	728.00	773.00	1,056.00	1,771.00	-	-
WITH BRZ PLUG	**SPIGOT• OUTLET**	**INSIDE CAULK OUTLET**	**SPEEDI-SET* OUTLET**	**A - OUTLET SIZE**						
				COVER MATERIAL	**02"**	**03"**	**04"**	**◆05"**	****06"**	****08"**
Gasket Seal Plug	4041S	4046C	4052L	†Nickel Bronze (-NB)	1,051.00	1,094.00	1,376.00	2,091.00	-	-
				Polished Bronze (-PB)	975.00	1,018.00	1,300.00	2,015.00	-	-
Taper Thread Plug	**4043S		**4053L	†Nickel Bronze (-NB)	1,051.00	1,094.00	1,376.00	2,091.00	2,635.00	2,900.00
				Polished Bronze (-PB)	975.00	1,018.00	1,300.00	2,015.00	2,559.00	2,824.00
Taper Thread Plug		4048C		†Nickel Bronze (-NB)	1,051.00	1,094.00	1,376.00	-	-	-
				Polished Bronze (-PB)	975.00	1,018.00	1,300.00	-	-	-
				APPROX WT. LBS.	14	15	19	25	28	32

REGULARLY FURNISHED: Duco Cast Iron Cleanout with Square Adjustable Scoriated Secured Nickel Bronze Top. Closure Plug Type as Indicated By Figure Number Selected.

**6 & 8" Available w/Bronze Taper Plug Only.
5, 6 & 8" Not Available w/Inside Caulk Outlet.
* Speedi-Set Outlet Available with 2, 3, 4, 6 or 8" Connection Only. Specify Service Weight (L), Extra Heavy (LXH) or PVC (LPVC). LPVC applies to 6" pipe size only.
• Spigot Ferrules are Suitable for use with No-Hub Connections.
◆ 5" Available w/Spigot Outlet Only.

†REGULARLY FURNISHED

FIG. 4100-4113 SERIES FINISHED FLOOR CLEANOUTS W/ADJUSTABLE ROUND EXTRA HEAVY DUTY TOPS

FUNCTION: Used in hospital, school, institutional and industrial buildings where floors are subject to heavy load traffic.

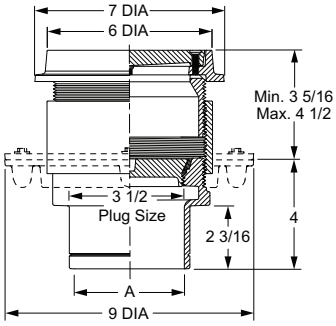

4100 Series
2" & 5" Sizes

OPTIONS:

		ADD
-DX	Wide Flange	607.00
-F	Flashing Flange	N/C
-FC	Flange w/Flashing Clamp	137.00
-G	Galvanized CI	282.00
-IP	Iron Plug (In lieu of ABS)	123.00
-U	Vandal Proof Screws	123.00

REPLACEMENT COVERS:

	LIST
4100NBTOP4-NS	1,022.00
4100NBTOP6-NS	1,580.00
4100PBTOP4-NS	935.00
4100PBTOP6-NS	1,500.00

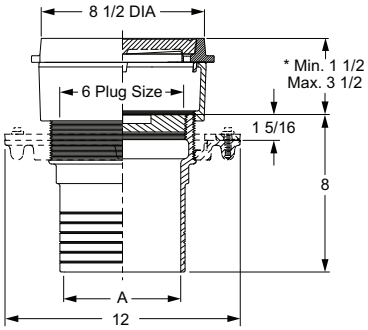

4103 Series
6" & 8" Sizes

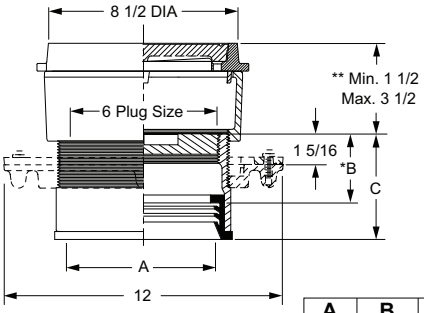

4113 Series
6" & 8" Sizes

A SIZE	B	C
06	*3	4 9/16
08	*3 1/4	4 13/16

NOTE: When Flange -F is specified, Min. 1 1/2" becomes 2"

WITH ABS PLUG	SPIGOT• OUTLET	INSIDE CAULK OUTLET	SPEEDI-SET* OUTLET	COVER MATERIAL	A - OUTLET SIZE 02"	03"	04"	◆05"	**06"	**08"
Gasket Seal Plug	4100S	4105C	4111L	†Nickel Bronze (-NB)	1,001.00	1,050.00	1,329.00	2,050.00	-	-
				Polished Bronze (-PB)	925.00	974.00	1,253.00	1,974.00	-	-
Taper Thread Plug	4104S	4109C	4114L	†Nickel Bronze (-NB)	1,001.00	1,050.00	1,329.00	2,050.00	-	-
				Polished Bronze (-PB)	925.00	974.00	1,253.00	1,974.00	-	-
WITH BRZ PLUG	**SPIGOT• OUTLET**	**INSIDE CAULK OUTLET**	**SPEEDI-SET* OUTLET**	**COVER MATERIAL**	**A - OUTLET SIZE 02"**	**03"**	**04"**	**◆05"**	****06"**	****08"**
Gasket Seal Plug	4101S	4106C	4112L	†Nickel Bronze (-NB)	1,248.00	1,297.00	1,580.00	2,294.00	-	-
				Polished Bronze (-PB)	1,172.00	1,221.00	1,504.00	2,218.00	-	-
Taper Thread Plug	**4103S		**4113L	†Nickel Bronze (-NB)	1,248.00	1,297.00	1,580.00	2,294.00	2,833.00	3,102.00
				Polished Bronze (-PB)	1,172.00	1,221.00	1,504.00	2,218.00	2,757.00	3,026.00
Taper Thread Plug		4108C		†Nickel Bronze (-NB)	1,248.00	1,297.00	1,580.00	-	-	-
				Polished Bronze (-PB)	1,172.00	1,221.00	1,504.00	-	-	-
				APPROX WT. LBS.	14	15	19	25	28	32

REGULARLY FURNISHED: Duco Cast Iron Cleanout with Round Adjustable Scoriated Secured Nickel Bronze Top. Closure Plug Type as Indicated By Figure Number Selected.

**6 & 8" Available w/Bronze Taper Plug Only.
5, 6 & 8" Not Available w/Inside Caulk Outlet.
* Speedi-Set Outlet Available with 2, 3, 4, 6 or 8" Connection Only. Specify Service Weight (L), Extra Heavy (LXH) or PVC (LPVCE). LPVC applies to 6" pipe size only.
• Spigot Ferrules are Suitable for use with No-Hub Connections.
◆ 5" Available w/Spigot Outlet Only.

†REGULARLY FURNISHED

FIG. 4120-4133 SERIES FINISHED FLOOR CLEANOUTS W/ADJUSTABLE ROUND TOP W/THREADED SPANNER WRENCH COVER

FUNCTION: Used in finished floors subjected to pedestrian traffic when threaded watertight cover is desired.

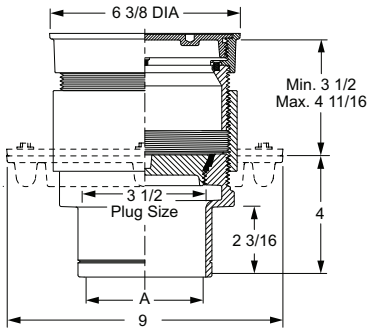

4120 Series
2" - 5" Sizes

OPTIONS:

		ADD
-DX	Wide Flange	607.00
-F	Flashing Flange	N/C
-FC	Flange w/Flashing Clamp	137.00
-G	Galvanized CI	282.00
-IP	Iron Plug (In lieu of ABS)	123.00
-SW	Spanner Wrench	177.00

REPLACEMENT COVERS:

	LIST
4120NBTOP4-NS	957.00
4120NBTOP6-NS	1,635.00
4120PBTOP4-NS	879.00
4120PBTOP6-NS	1,558.00

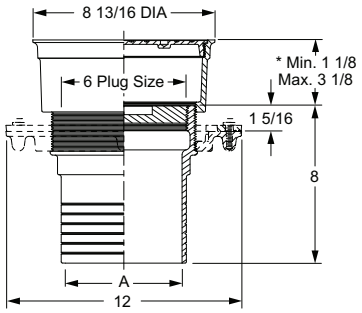

4123 Series
6" & 8" Sizes

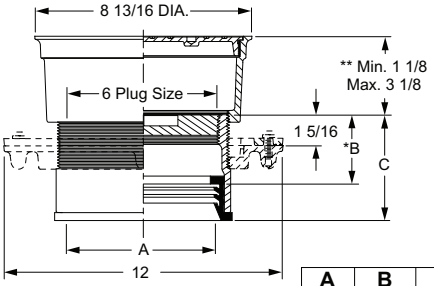

A SIZE	B	C
06	*3	4 9/16
08	*3 1/4	4 13/16

4133 Series
6" & 8" Sizes

NOTE: When Flange -F is specified, Min. 1 1/8" becomes 1 5/8"

WITH ABS PLUG	SPIGOT• OUTLET	INSIDE CAULK OUTLET	SPEEDI-SET* OUTLET	A - OUTLET SIZE						
				COVER MATERIAL	02"	03"	04"	◆05"	**06"	**08"
Gasket Seal Plug	4120S	4125C	4131L	†Nickel Bronze (-NB)	854.00	1,171.00	1,278.00	2,174.00	-	-
				Polished Bronze (-PB)	778.00	1,095.00	1,202.00	2,098.00	-	-
Taper Thread Plug	4124S	4129C	4134L	†Nickel Bronze (-NB)	854.00	1,171.00	1,278.00	2,174.00	-	-
				Polished Bronze (-PB)	778.00	1,095.00	1,202.00	2,098.00	-	-
WITH BRZ PLUG	**SPIGOT• OUTLET**	**INSIDE CAULK OUTLET**	**SPEEDI-SET* OUTLET**	**A - OUTLET SIZE**						
				COVER MATERIAL	**02"**	**03"**	**04"**	**◆05"**	****06"**	****08"**
Gasket Seal Plug	4121S	4126C	4132L	†Nickel Bronze (-NB)	1,098.00	1,416.00	1,533.00	2,420.00	-	-
				Polished Bronze (-PB)	1,022.00	1,340.00	1,457.00	2,344.00	-	-
Taper Thread Plug	**4123S		**4133L	†Nickel Bronze (-NB)	1,098.00	1,416.00	1,533.00	2,420.00	2,960.00	4,735.00
				Polished Bronze (-PB)	1,022.00	1,340.00	1,457.00	2,344.00	2,884.00	4,659.00
Taper Thread Plug		4128C		†Nickel Bronze (-NB)	1,098.00	1,416.00	1,533.00	-	-	-
				Polished Bronze (-PB)	1,022.00	1,340.00	1,457.00	-	-	-
				APPROX WT. LBS.	14	15	19	25	28	32

REGULARLY FURNISHED: Duco Cast Iron Cleanout with Round Adjustable Scoriated Secured Nickel Bronze Top. Closure Plug Type as Indicated By Figure Number Selected.

** 6 & 8" Available w/Bronze Taper Plug Only.
5, 6 & 8" Not Available w/Inside Caulk Outlet.
* Speedi-Set Outlet Available with 2, 3, 4, 6 or 8" Connection Only. Specify Service Weight (L), Extra Heavy (LXH) or PVC (LPVC). LPVC applies to 6" pipe size only.
• Spigot Ferrules are Suitable for use with No-Hub Connections.
◆ 5" Available w/Spigot Outlet Only.

†REGULARLY FURNISHED

FIG. 4140-4153 SERIES FINISHED FLOOR CLEANOUTS W/ADJUSTABLE ROUND TOP WITH TILE RECESS

FUNCTION: For use in floors and areas which are covered with a floor covering such as asphalt or vinyl tile, linoleum, etc., bearing foot and medium load wheeled traffic. Tile recess receives inlay of floor material, presenting an unobtrusive appearance. Allows for easy floor level adjustment.

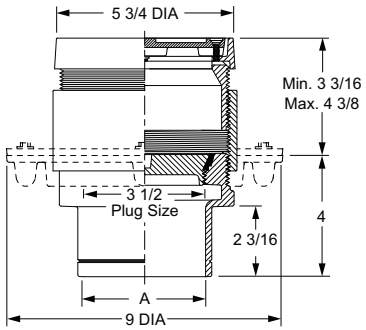

4140 Series
2" - 5" Sizes

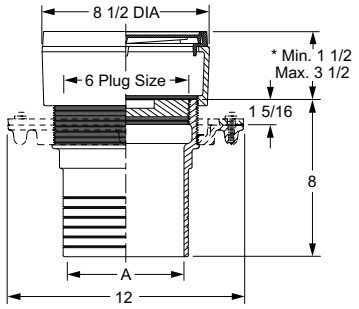

4143 Series
6" & 8" Sizes

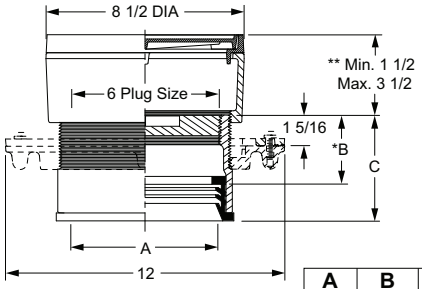

4153 Series
6" & 8" Sizes

A SIZE	B	C
06	*3	4 9/16
08	*3 1/4	4 13/16

NOTE: When Flange -F is specified, Min. 1 1/2" becomes 2"

OPTIONS:

		ADD
-DX	Wide Flange	607.00
-F	Flashing Flange	N/C
-FC	Flange w/Flashing Clamp	137.00
-G	Galvanized CI	282.00
-IP	Iron Plug (In lieu of ABS)	123.00
-U	Vandal Proof Screws	123.00

REPLACEMENT COVERS:

	LIST
4140NBTOP4-NS	889.00
4140NBTOP6-NS	1,225.00
4140PBTOP4-NS	739.00
4140PBTOP6-NS	1,140.00

WITH ABS PLUG	SPIGOT• OUTLET	INSIDE CAULK OUTLET	SPEEDI-SET* OUTLET	A - OUTLET SIZE						
				COVER MATERIAL	02"	03"	04"	◆05"	**06"	**08"
Gasket Seal Plug	4140S	4145C	4151L	†Nickel Bronze (-NB)	804.00	849.00	1,132.00	1,847.00	-	-
				Polished Bronze (-PB)	728.00	773.00	1,056.00	1,771.00	-	-
Taper Thread Plug	4144S	4149C	4154L	†Nickel Bronze (-NB)	804.00	849.00	1,132.00	1,847.00	-	-
				Polished Bronze (-PB)	728.00	773.00	1,056.00	1,771.00	-	-

WITH BRZ PLUG	SPIGOT• OUTLET	INSIDE CAULK OUTLET	SPEEDI-SET* OUTLET	A - OUTLET SIZE						
				COVER MATERIAL	02"	03"	04"	◆05"	**06"	**08"
Gasket Seal Plug	4141S	4146C	4152L	†Nickel Bronze (-NB)	1,051.00	1,094.00	1,376.00	2,091.00	-	-
				Polished Bronze (-PB)	975.00	1,018.00	1,300.00	2,015.00	-	-
Taper Thread Plug	**4143S		**4153L	†Nickel Bronze (-NB)	1,051.00	1,094.00	1,376.00	2,091.00	2,635.00	2,900.00
				Polished Bronze (-PB)	975.00	1,018.00	1,300.00	2,015.00	2,559.00	2,824.00
Taper Thread Plug		4148C		†Nickel Bronze (-NB)	1,051.00	1,094.00	1,376.00	-	-	-
				Polished Bronze (-PB)	975.00	1,018.00	1,300.00	-	-	-
				APPROX WT. LBS.	14	15	19	25	28	32

REGULARLY FURNISHED: Duco Cast Iron Cleanout with Round Adjustable Secured Nickel Bronze Top with 1/8" Tile Recess. Closure Plug Type as Indicated By Figure Number Selected.

**6 & 8" Available w/Bronze Taper Plug Only.
5, 6 & 8" Not Available w/Inside Caulk Outlet.
* Speedi-Set Outlet Available with 2, 3, 4, 6 or 8" Connection Only. Specify Service Weight (L), Extra Heavy (LXH) or PVC (LPVCE). LPVC applies to 6" pipe size only.
• Spigot Ferrules are Suitable for use with No-Hub Connections.
◆ 5" Available w/Spigot Outlet Only.

†REGULARLY FURNISHED

FIG. 4160-4173 SERIES FINISHED FLOOR CLEANOUTS W/ADJUSTABLE SQUARE TOP WITH TILE RECESS

FUNCTION: For use in floors and areas which are covered with a floor covering such as asphalt or vinyl tile, linoleum, etc., bearing foot and medium load wheeled traffic. The square top is particularly adaptable to the straight line patterns of tile designs. Allows for easy floor level adjustment.

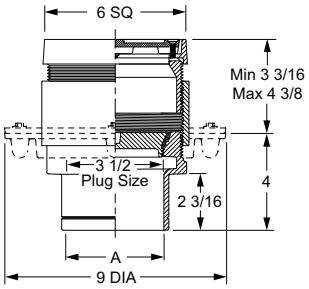

4160 Series
2" - 5" Sizes

OPTIONS:		ADD
-DX	Wide Flange	607.00
-F	Flashing Flange	N/C
-FC	Flange w/Flashing Clamp	137.00
-G	Galvanized CI	282.00
-IP	Iron Plug (In lieu of ABS)	123.00
-U	Vandal Proof Screws	123.00

REPLACEMENT COVERS:	LIST
4160NBTOP4-NS	889.00
4160NBTOP6-NS	1,225.00
4160PBTOP4-NS	739.00
4160PBTOP6-NS	1,140.00

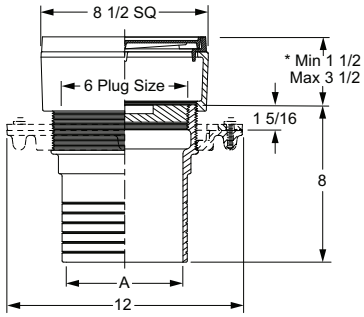

4163 Series
6" & 8" Sizes

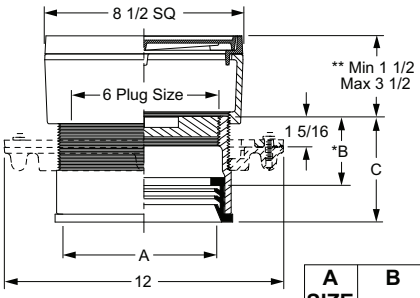

A SIZE	B	C
06	*3	4 9/16
08	*3 1/4	4 13/16

4173 Series
6" & 8" Sizes

NOTE: When Flange -F is specified, Min. 1 1/2" becomes 2"

WITH ABS PLUG	SPIGOT• OUTLET	INSIDE CAULK OUTLET	SPEEDI-SET* OUTLET	A - OUTLET SIZE						
				COVER MATERIAL	02"	03"	04"	◆05"	**06"	**08"
Gasket Seal Plug	4160S	4165C	4171L	†Nickel Bronze (-NB)	804.00	849.00	1,132.00	1,847.00	-	-
				Polished Bronze (-PB)	728.00	773.00	1,056.00	1,771.00	-	-
Taper Thread Plug	4164S	4169C	4174L	†Nickel Bronze (-NB)	804.00	849.00	1,132.00	1,847.00	-	-
				Polished Bronze (-PB)	728.00	773.00	1,056.00	1,771.00	-	-
WITH BRZ PLUG	**SPIGOT• OUTLET**	**INSIDE CAULK OUTLET**	**SPEEDI-SET* OUTLET**	**A - OUTLET SIZE**						
				COVER MATERIAL	**02"**	**03"**	**04"**	**◆05"**	****06"**	****08"**
Gasket Seal Plug	4161S	4166C	4172L	†Nickel Bronze (-NB)	1,051.00	1,094.00	1,376.00	2,091.00	-	-
				Polished Bronze (-PB)	975.00	1,018.00	1,300.00	2,015.00	-	-
Taper Thread Plug	**4163S		**4173L	†Nickel Bronze (-NB)	1,051.00	1,094.00	1,376.00	2,091.00	2,635.00	2,900.00
				Polished Bronze (-PB)	975.00	1,018.00	1,300.00	2,015.00	2,559.00	2,824.00
Taper Thread Plug		4168C		†Nickel Bronze (-NB)	1,051.00	1,094.00	1,376.00	-	-	-
				Polished Bronze (-PB)	975.00	1,018.00	1,300.00	-	-	-
				APPROX WT. LBS.	14	15	19	25	28	32

REGULARLY FURNISHED: Duco Cast Iron Cleanout with Square Adjustable Secured Nickel Bronze Top with 1/8" Tile Recess. Closure Plug Type as Indicated By Figure Number Selected.

**6 & 8" Available w/Bronze Taper Plug Only.
5,6 & 8" Not Available w/Inside Caulk Outlet.
* Speedi-Set Outlet Available with 2, 3, 4, 6 or 8" Connection Only. Specify Service Weight (L), Extra Heavy (LXH) or PVC (LPVC). LPVC applies to 6" pipe size only.
• Spigot Ferrules are Suitable for use with No-Hub Connections.
◆ 5" Available w/Spigot Outlet Only.

†REGULARLY FURNISHED

FIG. 4180-4193 SERIES FINISHED FLOOR CLEANOUTS W/ADJUSTABLE ROUND TOP WITH TERRAZZO RECESS

FUNCTION: Used in terrazzo and similar poured floors bearing foot and medium load wheeled traffic. The recess is filled with the floor material, presenting an unobtrusive appearance. Lock-in design firmly holds floor material in recess.

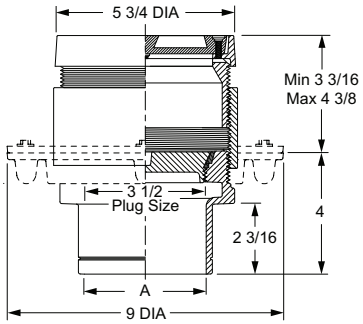

4180 Series
2" - 5" Sizes

OPTIONS:

		ADD
-DX	Wide Flange	607.00
-F	Flashing Flange	N/C
-FC	Flange w/Flashing Clamp	137.00
-G	Galvanized CI	282.00
-IP	Iron Plug (In lieu of ABS)	123.00
-U	Vandal Proof Screws	123.00

REPLACEMENT COVERS:

	LIST
4180NBTOP4-NS	1,273.00
4180NBTOP6-NS	1,933.00
4180PBTOP4-NS	1,198.00

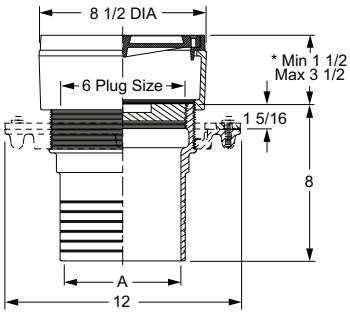

4183 Series
6" & 8" Sizes

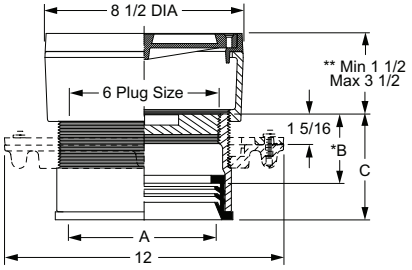

4193 Series
6" & 8" Sizes

A SIZE	B	C
06	*3	4 9/16
08	*3 1/4	4 13/16

NOTE: When Flange -F is specified, Min. 1 1/2" becomes 2"

WITH ABS PLUG	SPIGOT• OUTLET	INSIDE CAULK OUTLET	SPEEDI-SET* OUTLET	COVER MATERIAL	A - OUTLET SIZE 02"	03"	04"	◆05"	**06"	**08"
Gasket Seal Plug	4180S	4185C	4191L	†Nickel Bronze (-NB)	1,257.00	1,300.00	1,587.00	2,297.00	-	-
				Polished Bronze (-PB)	1,181.00	1,224.00	1,511.00	2,221.00	-	-
Taper Thread Plug	4184S	4189C	4194L	†Nickel Bronze (-NB)	1,257.00	1,300.00	1,587.00	2,297.00	-	-
				Polished Bronze (-PB)	1,181.00	1,224.00	1,511.00	2,221.00	-	-
WITH BRZ PLUG	**SPIGOT• OUTLET**	**INSIDE CAULK OUTLET**	**SPEEDI-SET* OUTLET**	**COVER MATERIAL**	**A - OUTLET SIZE 02"**	**03"**	**04"**	**◆05"**	****06"**	****08"**
Gasket Seal Plug	4181S	4186C	4192L	†Nickel Bronze (-NB)	1,508.00	1,549.00	1,839.00	2,547.00	-	-
				Polished Bronze (-PB)	1,432.00	1,473.00	1,763.00	2,471.00	-	-
Taper Thread Plug	**4183S		**4193L	†Nickel Bronze (-NB)	1,508.00	1,549.00	1,839.00	2,547.00	3,087.00	3,351.00
				Polished Bronze (-PB)	1,432.00	1,473.00	1,763.00	2,471.00	3,011.00	3,275.00
Taper Thread Plug		4188C		†Nickel Bronze (-NB)	1,508.00	1,549.00	1,839.00	-	-	-
				Polished Bronze (-PB)	1,432.00	1,473.00	1,763.00	-	-	-
				APPROX WT. LBS.	14	15	19	25	28	32

REGULARLY FURNISHED: Duco Cast Iron Cleanout with Round Adjustable Secured Nickel Bronze Top with 1/2" Terrazzo Recess. Closure Plug Type as Indicated by Figure Number Selected.

**6 & 8" Available w/Bronze Taper Plug Only.
5, 6 & 8" Not Available w/Inside Caulk Outlet.
* Speedi-Set Outlet Available with 2, 3, 4, 6 or 8" Connection Only. Specify Service Weight (L), Extra Heavy (LXH) or PVC (LPVC). LPVC applies to 6" pipe size only.
• Spigot Ferrules are Suitable for use with No-Hub Connections.
◆ 5" Available w/Spigot Outlet Only.

†REGULARLY FURNISHED

FIG. 4200 SERIES FINISHED FLOOR CLEANOUTS W/ADJUSTABLE SQUARE TOP WITH TERRAZZO RECESS

FUNCTION: Used in terrazzo and similar poured floors bearing foot and medium load wheeled traffic. The recess is filled with the floor material, presenting an unobtrusive appearance. Lock-in design firmly holds floor material in recess.

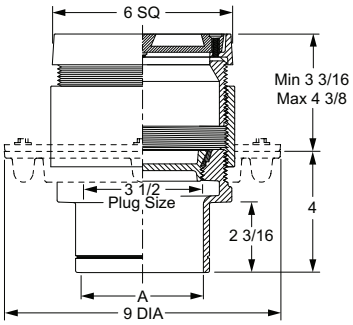

4200 Series
2" - 5" Sizes

OPTIONS:		ADD
-DX	Wide Flange	607.00
-F	Flashing Flange	N/C
-FC	Flange w/Flashing Clamp	137.00
-G	Galvanized CI	282.00
-IP	Iron Plug (In lieu of ABS)	123.00
-U	Vandal Proof Screws	123.00

REPLACEMENT COVERS:	LIST
4200NBTOP4-NS	1,273.00
4200NBTOP6-NS	1,933.00
4200PBTOP4-NS	1,198.00

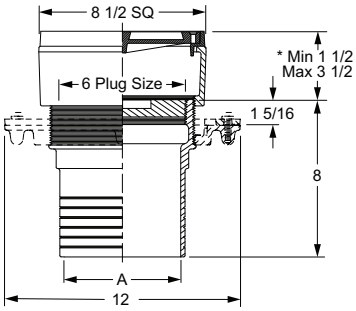

4203 Series
6" & 8" Sizes

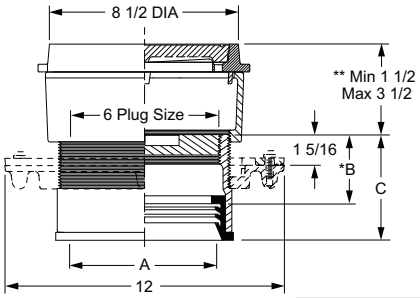

4213 Series
6" & 8" Sizes

A SIZE	B	C
06	*3	4 9/16
08	*3 1/4	4 13/16

NOTE: When Flange -F is specified, Min. 1 1/2" becomes 2"

WITH ABS PLUG	SPIGOT• OUTLET	INSIDE CAULK OUTLET	SPEEDI-SET* OUTLET	A - OUTLET SIZE						
				COVER MATERIAL	02"	03"	04"	◆05"	**06"	**08"
Gasket Seal Plug	4200S	4205C	4211L	†Nickel Bronze (-NB)	1,257.00	1,300.00	1,587.00	2,297.00	-	-
				Polished Bronze (-PB)	1,181.00	1,224.00	1,511.00	2,221.00	-	-
Taper Thread Plug	4204S	4209C	4214L	†Nickel Bronze (-NB)	1,257.00	1,300.00	1,587.00	2,297.00	-	-
				Polished Bronze (-PB)	1,181.00	1,224.00	1,511.00	2,221.00	-	-

WITH BRZ PLUG	SPIGOT• OUTLET	INSIDE CAULK OUTLET	SPEEDI-SET* OUTLET	A - OUTLET SIZE						
				COVER MATERIAL	02"	03"	04"	◆05"	**06"	**08"
Gasket Seal Plug	4201S	4206C	4212L	†Nickel Bronze (-NB)	1,508.00	1,549.00	1,839.00	2,547.00	-	-
				Polished Bronze (-PB)	1,432.00	1,473.00	1,763.00	2,471.00	-	-
Taper Thread Plug	**4203S		**4213L	†Nickel Bronze (-NB)	1,508.00	1,549.00	1,839.00	2,547.00	3,087.00	3,351.00
				Polished Bronze (-PB)	1,432.00	1,473.00	1,763.00	2,471.00	3,011.00	3,275.00
Taper Thread Plug		4208C		†Nickel Bronze (-NB)	1,508.00	1,549.00	1,839.00	-	-	-
				Polished Bronze (-PB)	1,432.00	1,473.00	1,763.00	-	-	-
				APPROX WT. LBS.	14	15	19	25	28	32

REGULARLY FURNISHED: Duco Cast Iron Cleanout with Square Adjustable Secured Nickel Bronze Top with 1/2" Terrazzo Recess. Closure Plug Type as Indicated By Figure Number Selected.

**6 & 8" Available w/Bronze Taper Plug Only.
5, 6 & 8" Not Available w/Inside Caulk Outlet.
* Speedi-Set Outlet Available with 2, 3, 4, 6 or 8" Connection Only. Specify Service Weight (L), Extra Heavy (LXH) or PVC (LPVC). LPVC applies to 6" pipe size only.
• Spigot Ferrules are Suitable for use with No-Hub Connections.
◆ 5" Available w/Spigot Outlet Only.

†REGULARLY FURNISHED

FIG. 4220 SERIES FINISHED FLOOR CLEANOUTS W/ADJUSTABLE ROUND HEAVY DUTY TOPS

FUNCTION: Used in floors and areas where appearance of cast iron is satisfactory. Will withstand heavy load traffic.

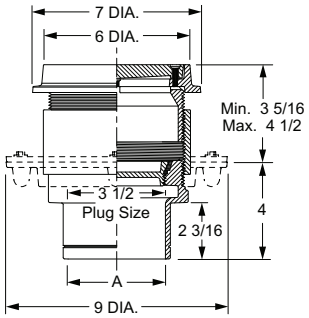

4220 Series
2" - 5" Sizes

OPTIONS:

		ADD
-DX	Wide Flange	607.00
-F	Flashing Flange	N/C
-FC	Flange w/Flashing Clamp	137.00
-G	Galvanized CI	282.00
-IP	Iron Plug (In lieu of ABS)	123.00
-M	Ductile Iron Cover	391.00
-U	Vandal Proof Screws	123.00

REPLACEMENT COVERS:

	LIST
4220-4-NS	578.00
4220-6-NS	923.00
4220-4M-NS	968.00
4220-6M-NS	1,318.00

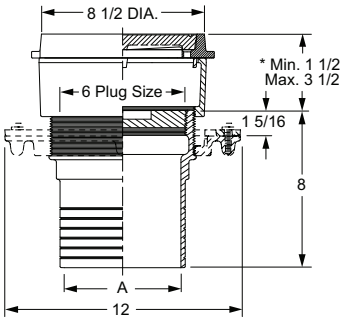

4223 Series
6" & 8" Sizes

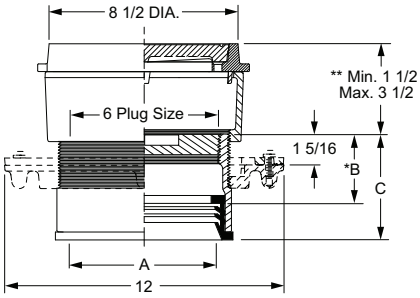

4233 Series
6" & 8" Sizes

A SIZE	B	C
06	*3	4 9/16
08	*3 1/4	4 13/16

NOTE: When Flange -F is specified, Min. 1 1/2" becomes 2"

WITH ABS PLUG	SPIGOT• OUTLET	INSIDE CAULK OUTLET	SPEEDI-SET* OUTLET	A - OUTLET SIZE						
				COVER MATERIAL	02"	03"	04"	◆05"	**06"	**08"
Gasket Seal Plug	4220S	4225C	4231L	†Cast Iron (-CI)	654.00	748.00	889.00	1,504.00	-	-
Taper Thread Plug	4224S	4229C	4234L							

WITH BRZ PLUG	SPIGOT• OUTLET	INSIDE CAULK OUTLET	SPEEDI-SET* OUTLET	A - OUTLET SIZE						
				COVER MATERIAL	02"	03"	04"	◆05"	**06"	**08"
Gasket Seal Plug	4221S	4226C	4232L	†Cast Iron (-CI)	902.00	996.00	1,135.00	1,745.00	-	-
Taper Thread Plug	**4223S		**4233L	†Cast Iron (-CI)	902.00	996.00	1,135.00	1,745.00	2,294.00	2,635.00
Taper Thread Plug		4228C		†Cast Iron (-CI)	902.00	996.00	1,135.00	-	-	-
				APPROX WT. LBS.	14	15	19	25	28	32

REGULARLY FURNISHED: Duco Cast Iron Cleanout with Round Adjustable Scoriated Secured Cast Iron Top. Closure Plug Type as Indicated By Figure Number Selected.

**6 & 8" Available w/Bronze Taper Plug Only.
5, 6 & 8" Not Available w/Inside Caulk Outlet.
* Speedi-Set Outlet Available with 2, 3, 4, 6 or 8" Connection Only. Specify Service Weight (L), Extra Heavy (LXH) or PVC (LPVC). LPVC applies to 6" pipe size only.
• Spigot Ferrules are Suitable for use with No-Hub Connections.
◆ 5" Available w/Spigot Outlet Only.

†REGULARLY FURNISHED

FIG. 4240 SERIES UNFINISHED FLOOR CLEANOUTS W/ADJUSTABLE ROUND CAST IRON TOP W/TRACTOR COVER

FUNCTION: Used in unfinished areas where a loose set, non-tilt tractor cover is desired. Will withstand heavy load traffic.

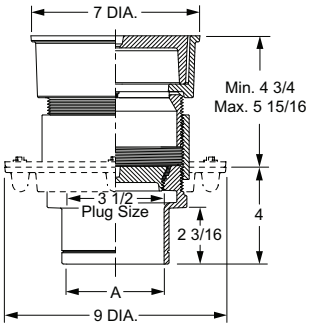

4240 Series
2" - 5" Sizes

OPTIONS:

		ADD
-CSS	Center Securing Screw	123.00
-DX	Wide Flange	607.00
-F	Flashing Flange	N/C
-FC	Flange w/Flashing Clamp	137.00
-G	Galvanized CI	282.00
-IP	Iron Plug (In lieu of ABS)	123.00
-M	Ductile Iron Cover	391.00
-U	VP Center Securing Screw	123.00

REPLACEMENT COVERS:

	LIST
4240-4-NS	435.00
4240-6-NS	825.00
4240-4M-NS	825.00
4240-6M-NS	1,214.00
4240-4NBT-NS	815.00
4240-6NBT-NS	1,225.00
4240-4PBT-NS	739.00
4240-6PBT-NS	1,140.00

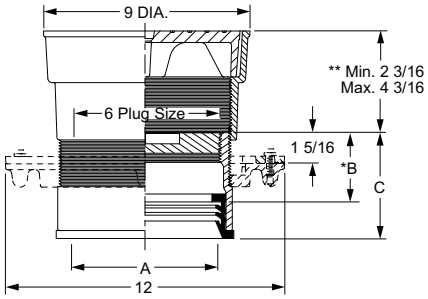

4239 Series
6" & 8" Sizes

A SIZE	B	C
06	*3	4 9/16
08	*3 1/4	4 13/16

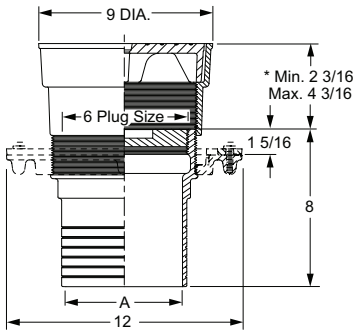

4243 Series
6" & 8" Sizes

NOTE: When Flange -F is specified, Min. 2 3/16" becomes 2 11/16"

WITH ABS PLUG	SPIGOT• OUTLET	INSIDE CAULK OUTLET	SPEEDI-SET* OUTLET	COVER MATERIAL	A - OUTLET SIZE 02"	03"	04"	◆05"	**06"	**08"
Gasket Seal Plug	4240S	4245C	4237L	†Duco Cast Iron (-CI)	540.00	626.00	767.00	1,297.00	-	-
				Nickel Bronze (-NB)	893.00	979.00	1,120.00	2,080.00	-	-
				Polished Bronze (-PB)	819.00	905.00	1,046.00	2,002.00	-	-
Taper Thread Plug	4244S	4249C	4236L	†Duco Cast Iron (-CI)	540.00	626.00	767.00	1,297.00	-	-
				Nickel Bronze (-NB)	893.00	979.00	1,120.00	2,080.00	-	-
				Polished Bronze (-PB)	819.00	905.00	1,046.00	2,002.00	-	-
WITH BRZ PLUG	**SPIGOT• OUTLET**	**INSIDE CAULK OUTLET**	**SPEEDI-SET* OUTLET**	**COVER MATERIAL**	**A - OUTLET SIZE 02"**	**03"**	**04"**	**◆05"**	****06"**	****08"**
Gasket Seal Plug	4241S	4246C	4238L	†Duco Cast Iron (-CI)	788.00	877.00	1,021.00	1,540.00	-	-
				Nickel Bronze (-NB)	1,141.00	1,230.00	1,374.00	2,323.00	-	-
				Polished Bronze (-PB)	1,067.00	1,156.00	1,300.00	2,245.00	-	-
Taper Thread Plug	**4243S		**4239L	†Duco Cast Iron (-CI)	788.00	877.00	1,021.00	1,540.00	2,258.00	2,601.00
				Nickel Bronze (-NB)	1,141.00	1,230.00	1,374.00	2,323.00	3,041.00	3,627.00
				Polished Bronze (-PB)	1,067.00	1,156.00	1,300.00	2,245.00	2,963.00	3,548.00
Taper Thread Plug		4248C		†Duco Cast Iron (-CI)	788.00	877.00	1,021.00	-	-	-
				Nickel Bronze (-NB)	1,141.00	1,230.00	1,374.00	-	-	-
				Polished Bronze (-PB)	1,067.00	1,156.00	1,300.00	-	-	-
				APPROX WT. LBS.	15	18	20	29	32	36

REGULARLY FURNISHED: Duco Cast Iron Cleanout with Round Adjustable Scoriated Cast Iron Top with Non-Tilt Tractor Cover. Closure Plug Type as Indicated by Figure Number Selected.

**6 & 8" Available w/Bronze Taper Plug Only.
5, 6 & 8" Not Available w/Inside Caulk Outlet.
* Speedi-Set Outlet Available with 2, 3, 4, 6 or 8" Connection Only. Specify Service Weight (L), Extra Heavy (LXH) or PVC (LPVC). LPVC applies to 6" pipe size only.
• Spigot Ferrules are Suitable for use with No-Hub Connections.
◆ 5" Available w/Spigot Outlet Only.

FIG. 4250 SERIES UNFINISHED FLOOR CLEANOUTS ROUND FLANGED HOUSING WITH HEAVY DUTY CAST IRON COVER

FUNCTION: Used in outside and inside areas. High flange permits use in areas surfaced with concrete or other poured materials. Low flange is used with a ring of concrete poured below the surface for non-surfaced areas and areas surfaced with asphalt paving. Housing is completely free of piping so that no loading is transmitted to the pipe.

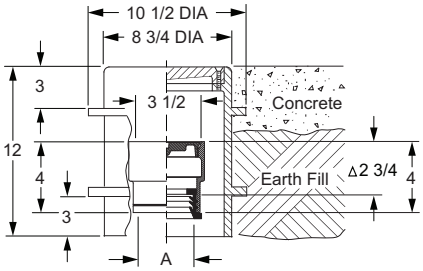

4250 Series
2" - 5" Sizes

OPTIONS:

		ADD
-G	Galvanized CI	996.00
-GH	Galv CI Housing Only	715.00
-IP	Iron Plug (In lieu of ABS)	123.00
-M	Ductile Iron Cover	589.00
-U	Vandal Proof Screws	123.00
	Cover Cast W/"Gas Shut Off" (-GSO) or "Water Shut Off" (-WSO)	246.00
4880	Housing Only	1,788.00

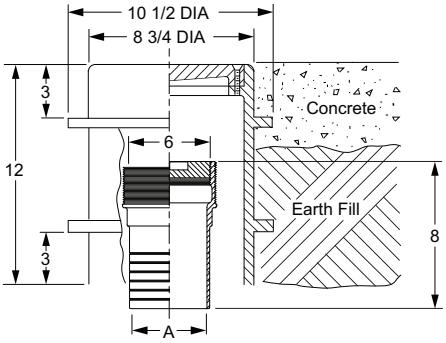

4253 Series
6" & 8" Sizes

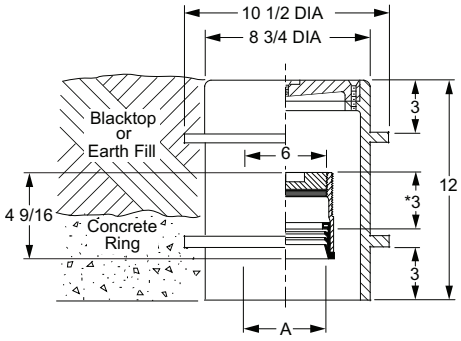

4263 Series
6" Size

WITH ABS PLUG	SPIGOT• OUTLET	INSIDE CAULK OUTLET	SPEEDI-SET* OUTLET	COVER MATERIAL	A - OUTLET SIZE 02"	03"	04"	◆05"	**06"	**08"
Gasket Seal Plug***	4250S	4255C	4261L	†Duco Cast Iron (-CI)	2,012.00	2,084.00	2,105.00	2,416.00	-	-
Taper Thread Plug	4254S	4259C	4264L	Nickel Bronze (-NB)	2,800.00	2,872.00	2,893.00	3,204.00	-	-
				Polished Bronze (-PB)	2,725.00	2,797.00	2,818.00	3,129.00	-	-

WITH BRZ PLUG	SPIGOT• OUTLET	INSIDE CAULK OUTLET	SPEEDI-SET* OUTLET	COVER MATERIAL	A - OUTLET SIZE 02"	03"	04"	◆05"	**06"	**08"
Gasket Seal Plug	4251S		4262L	†Duco Cast Iron (-CI)	2,258.00	2,332.00	2,350.00	2,664.00	-	-
				Nickel Bronze (-NB)	3,046.00	3,120.00	3,138.00	3,452.00	-	-
				Polished Bronze (-PB)	2,971.00	3,045.00	3,063.00	3,377.00	-	-
Gasket Seal Plug		4256C		†Duco Cast Iron (-CI)	2,258.00	2,332.00	2,350.00	-	-	-
				Nickel Bronze (-NB)	3,046.00	3,120.00	3,138.00	-	-	-
				Polished Bronze (-PB)	2,971.00	3,045.00	3,063.00	-	-	-
Taper Thread Plug	**4253S			†Duco Cast Iron (-CI)	2,258.00	2,332.00	2,350.00	2,664.00	3,386.00	3,988.00
				Nickel Bronze (-NB)	3,046.00	3,120.00	3,138.00	3,452.00	4,174.00	4,776.00
				Polished Bronze (-PB)	2,971.00	3,045.00	3,063.00	3,377.00	4,099.00	4,701.00
Taper Thread Plug			Δ**4263L	†Duco Cast Iron (-CI)	2,258.00	2,332.00	2,350.00	-	3,386.00	-
				Nickel Bronze (-NB)	3,046.00	3,120.00	3,138.00	-	4,174.00	-
				Polished Bronze (-PB)	2,971.00	3,045.00	3,063.00	-	4,099.00	-
Taper Thread Plug		4258C		†Duco Cast Iron (-CI)	2,258.00	2,332.00	2,350.00	-	-	-
				Nickel Bronze (-NB)	3,046.00	3,120.00	3,138.00	-	-	-
				Polished Bronze (-PB)	2,971.00	3,045.00	3,063.00	-	-	-
				APPROX WT. LBS.	31	33	35	42	49	61

REGULARLY FURNISHED: Duco Cast Iron Cleanout and Double Flanged Housing with Heavy Duty Secured Scoriated Cast Iron Cover with Lifting Device. Closure Plug and Type of Outlet as Indicated By Figure Number Selected.

**6 & 8" Available w/Bronze Taper Plug Only.
***ABS Plug regularly furnished all outlets in 02, 03, and 04 inch sizes and 05 inch spigot.
5, 6 & 8" Not Available w/Inside Caulk Outlet.
* Speedi-Set Outlet Available with 2, 3, 4, 6 or 8" Connection Only. Specify Service Weight (L), Extra Heavy (LXH) or PVC (LPVC). LPVC applies to 6" pipe size only.
• Spigot Ferrules are suitable for use with No-Hub Connections.
◆ 5" Available w/Spigot Outlet Only.
Δ Not Available in 8".

†REGULARLY FURNISHED

FIG. 4280 SERIES UNFINISHED FLOOR CLEANOUT BODIES WITH CLOSURE PLUG

FUNCTION: Used where extension type cleanout is required. Not recommended for installation in floors or areas subjected to traffic unless access cover is provided.

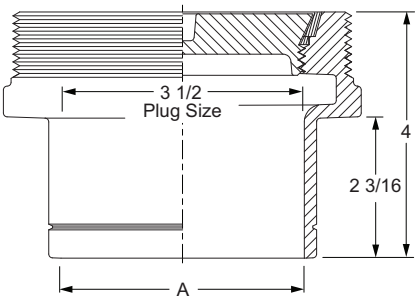

4280 Series
2" - 5" Sizes

OPTIONS:

		ADD
-F	Flashing Flange	**N/C**
-FC	Flange w/Flashing Clamp	**137.00**
-G	Galvanized CI	**154.00**
-IP	Iron Plug (In lieu of ABS)	**123.00**
-RHP	Raised Head Closure Plug	**N/C**
-TP	"T" Handle for Plug	**99.00**
	(Bronze plug must be used when -TP is specified)	

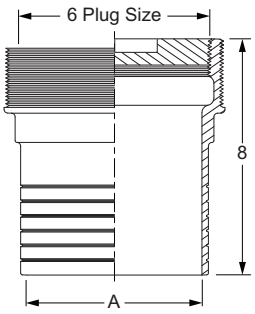

4283 Series
6" & 8" Sizes

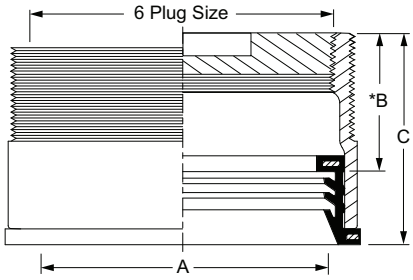

4293 Series
6" & 8" Sizes

A SIZE	B	C
06	*3	4 9/16
08	*3 1/4	4 13/16

WITH ABS PLUG	SPIGOT• OUTLET	INSIDE CAULK OUTLET	SPEEDI-SET* OUTLET	A - OUTLET SIZE						
				COVER MATERIAL	02"	03"	04"	◆05"	**06"	**08"
Gasket Seal Plug	4280S	4285C	4291L	†Duco Cast Iron (-CI)	228.00	301.00	383.00	626.00	-	-
Taper Thread Plug	4284S	4289C		†Duco Cast Iron (-CI)	228.00	301.00	383.00	626.00	-	-
WITH BRZ PLUG	**SPIGOT• OUTLET**	**INSIDE CAULK OUTLET**	**SPEEDI-SET* OUTLET**	**A - OUTLET SIZE**						
				COVER MATERIAL	**02"**	**03"**	**04"**	**◆05"**	****06"**	****08"**
Gasket Seal Plug	4281S	4286C	4292L	†Duco Cast Iron (-CI)	469.00	545.00	563.00	877.00	-	-
Taper Thread Plug	**4283S		**4293L	†Duco Cast Iron (-CI)	469.00	545.00	563.00	877.00	1,606.00	2,202.00
Taper Thread Plug		4288C		†Duco Cast Iron (-CI)	469.00	545.00	563.00	-	-	-
				APPROX WT. LBS.	6	7	11	15	16	20

REGULARLY FURNISHED: Duco Cast Iron Cleanout with Closure Plug Type as Indicated by Figure Number Selected.

** 6 & 8" Available w/Bronze Taper Plug Only.
5, 6 & 8" Not Available w/Inside Caulk Outlet.
* Speedi-Set Outlet Available with 2, 3, 4, 6 or 8" Connection Only. Specify Service Weight (L), Extra Heavy (LXH) or PVC (LPVCE). LPVC applies to 6" pipe size only.
• Spigot Ferrules are Suitable for use with No-Hub Connections.
◆ 5" Available w/Spigot Outlet Only.

†REGULARLY FURNISHED

FIG. 4313, 4318 MULTI-PURPOSE FLOOR CLEANOUTS W/ INTERNAL CLOSURE PLUG AND ROUND ADJUSTABLE CAST IRON TOP

FUNCTION: Used in areas where a large access cover is desirable and the appearance of cast iron is satisfactory. Non-Tilt cover Fig. 4318 shown below should be used for heavy load traffic. Allows easy floor level adjustment.

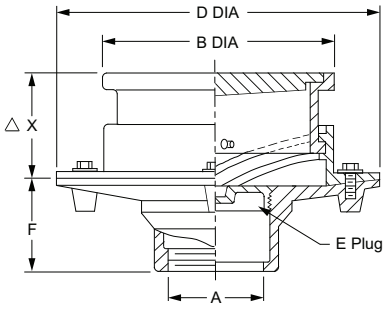

Fig. 4313
Medium Duty Top

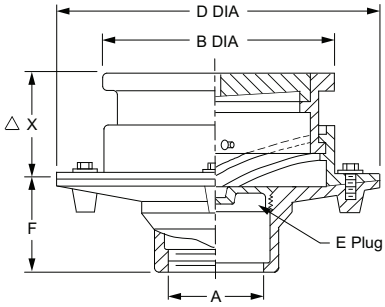

Fig. 4318
Heavy Duty Top

OUTLET VARIATIONS (Specify type of outlet and pipe size in inches.)

Outlet Type	Outlet Designation Outlet Type/Pipe Size	ADD
Inside Caulk	C02, C03, C04	**N/C**
Threaded	T02, T03, T04	**N/C**
No-Hub	Y02, Y03, Y04	**See Fig 2646Y for list add**

OPTIONS:		ADD
-G	Galvanized CI	**572.00**
-M	Ductile Iron Cover (4318)	**448.00**
-RT	Recessed for Tile	**448.00**
-S	Square Top, CI	**414.00**
-SEC	Secured Cover	**188.00**
-SNB	Square Top, add to CI	**1,034.00**
-SPB	Square Top, add to CI	**879.00**
-TP	"T" Handle for Plug	**99.00**
-U	Vandal Proof Screws	**188.00**

A OUTLET SIZE	B TOP DIA	D FLANGE DIA	E PLUG SIZE	F	△X MIN	△X MAX	†DUCO CAST IRON (-CI)	NICKEL BRONZE (-NB)	POLISHED BRONZE (-PB)	APPROX. WEIGHT LBS
02"	8 1/2"	12"	3 1/2"	4"	3 1/2"	4 1/2"	**1,564.00**	**2,088.00**	**2,007.00**	35
03"	8 1/2"	12"	4"	4"	3 1/2"	4 1/2"	**1,564.00**	**2,088.00**	**2,007.00**	35
04"	8 1/2"	12"	5"	4"	3 1/2"	4 1/2"	**1,612.00**	**2,136.00**	**2,055.00**	35

REGULARLY FURNISHED: Duco Cast Iron Flanged Body and Round Adjustable Top with Scoriated Loose Set Cast Iron Cover, Taper Thread Bronze Closure Plug and Flashing Collar.

△ Add 1/4" when bronze top is specified

†REGULARLY FURNISHED

FIG. 4333, 4338 MULTI-PURPOSE FLOOR CLEANOUTS W/ INTERNAL CLOSURE PLUG AND ROUND NON-ADJUSTABLE CAST IRON TOP

FUNCTION: Used in areas where a large access cover is desirable and the appearance of cast iron is satisfactory. Non-Tilt cover Fig. 4338 shown below should be used for heavy load traffic.

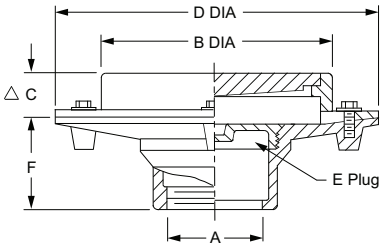

Fig. 4333
Medium Duty Top

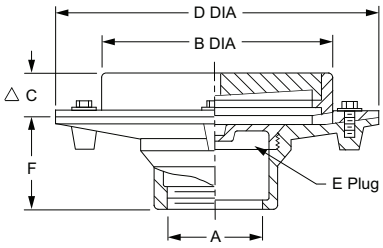

Fig. 4338
Heavy Duty Top

OUTLET VARIATIONS (Specify type of outlet and pipe size in inches.)

Outlet Type	Outlet Designation Outlet Type/Pipe Size	ADD
Inside Caulk	C02, C03, C04	**N/C**
Threaded	T02, T03, T04	**N/C**
No-Hub	Y02, Y03, Y04	**See Fig 2646Y for list add**

OPTIONS:		ADD
-G	Galvanized CI	**572.00**
-M	Ductile Iron Cover (4338)	**448.00**
-RT	Recessed for Tile	**448.00**
-S	Square Top, CI	**414.00**
-SEC	Secured Cover	**188.00**
-SNB	Square Top, add to CI	**1,034.00**
-SPB	Square Top, add to CI	**879.00**
-TP	"T" Handle for Plug	**99.00**
-U	Vandal Proof Screws	**188.00**

A OUTLET SIZE	B TOP DIA	△C	D FLANGE DIA	E PLUG SIZE	F	†DUCO CAST IRON (-CI)	NICKEL BRONZE (-NB)	POLISHED BRONZE (-PB)	APPROX. WEIGHT LBS
02"	8 1/2"	1 5/8"	12"	3 1/2"	4"	**1,273.00**	**1,797.00**	**1,716.00**	33
03"	8 1/2"	1 5/8"	12"	4"	4"	**1,273.00**	**1,797.00**	**1,716.00**	33
04"	8 1/2"	1 5/8"	12"	5"	4"	**1,434.00**	**1,958.00**	**1,877.00**	33

REGULARLY FURNISHED: Duco Cast Iron Body with Scoriated Loose Set Cast Iron Cover, Taper Thread Bronze Closure Plug and Flashing Collar.

△ Add 1/4" when bronze top is specified

†REGULARLY FURNISHED

FIG. DX4343 WIDE FLANGE CAST IRON MULTI-PURPOSE FLOOR CLEANOUT W/ INTERNAL CLOSURE PLUG

FUNCTION: Used where a waterproof covering is to be applied and a wide area is required for bonding and/or support.

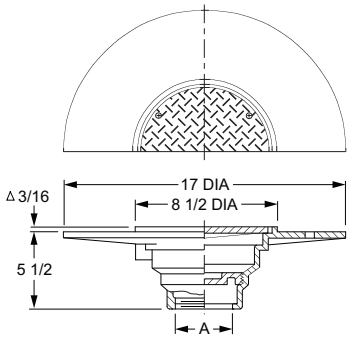

Fig. DX4343

OUTLET VARIATIONS (Specify type of outlet and pipe size in inches.)

Outlet Type	Outlet Designation Outlet Type/Pipe Size	ADD
Inside Caulk	C02, C03, C04	**N/C**
Threaded	T02, T03, T04	**N/C**
No-Hub	Y02, Y03, Y04	**See Fig 2646Y for list add**

OPTIONS:		ADD
-SH	Securing Holes in Flange	**156.00**
-U	Vandal Proof Cover	**123.00**

If Water-Proof Deck Covering thickness is greater (or less) than dimensions shown, the drain body should be set to compensate for the variation in thickness. Drain body should be set low enough to permit "dimpling" of area surrounding drain.

A OUTLET SIZE	TOP SIZE	†DUCO CAST IRON	DUCO CI PB TOP	DUCO CI NB TOP	APPROX. WEIGHT LBS
02, 03, 04"	8 1/2"	**1,063.00**	**1,506.00**	**1,587.00**	30

REGULARLY FURNISHED: Duco Cast Iron Body with Solid Secured Cover and Taper Thread Bronze Closure Plug.

FIG. 4400, 4402 CAULK FERRULE CLEANOUT LEAD SEAL PLUG W/ROUND ACCESS COVER

FUNCTION: Used in hub openings in drainage piping where a cleanout is required. The straight thread lead seal plug permits quick and easy removal. Grooves on outside of ferrule prevent turning. Face-of-wall cover is desirable on finished walls when ferrule is used in vertical piping.

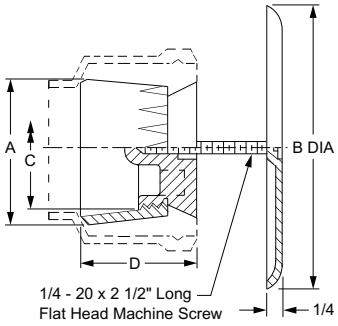

Fig. 4400, 4402

OPTIONS:		ADD
-BP	Cast Bronze Lead Seal Plug	
	02, 03, 04, 05"	**246.00**
	06, 08"	**788.00**
-LS	6" Long Center Screw	**57.00**
-TP	"T" Handle for Plug	**99.00**
-U	Vandal Proof Screw	**123.00**

LESS COVER	PLUG MATERIAL		A - PIPE SIZE:	02"	03"	04"	05"	06"
4400CI	CI Ferrule and CI Plug			123.00	191.00	264.00	394.00	540.00
4400AB	All Bronze			420.00	507.00	738.00	1,120.00	1,434.00
			A - PIPE SIZE:	02"	03"	04"	05"	06"
WITH COVER	PLUG MATERIAL	COVER MATERIAL	B - COVER SIZE DIA:	4 1/4"	5 1/2"	5 1/2"	7"	9 1/4"
4402	CI Ferrule and CI Plug	†Stainless Steel (-SS)		297.00	367.00	441.00	616.00	933.00
		Prime Coated Steel (-PC)		399.00	469.00	543.00	718.00	1,035.00
		Polished Bronze (-PB)		242.00	312.00	386.00	561.00	878.00
			C - SIZE	1 1/2"	2 1/2"	3 1/2"	4 1/2"	5 1/2"
			D	2 1/2"	2 3/4"	3"	3"	3"
			APPROX WT. LBS.	3	4	6	8	10

REGULARLY FURNISHED: Duco Cast Iron Caulk Ferrule and Cast Iron Lead Seal Plug with Stainless Steel Round Cover and Screw when indicated by Fig. Number.

†REGULARLY FURNISHED

FIG. 4420-4422 SERIES CAULK FERRULE CLEANOUT TAPER THREAD PLUG W/ROUND ACCESS COVER

FUNCTION: Used in hub openings in drainage piping where a cleanout is required. Ribbing on outside of ferrule prevents turning of ferrule in the caulking lead. Face-of-wall cover is desirable on finished walls.

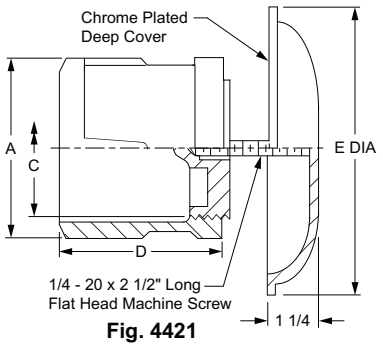

Fig. 4421

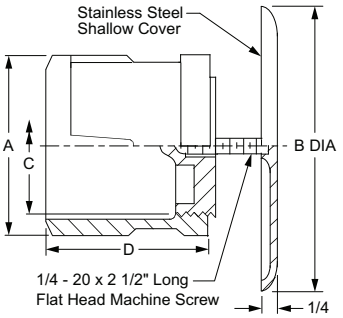

Fig. 4422

OPTIONS:		ADD
-LS	6" Long Center Screw	57.00
-TP	"T" Handle for Plug	99.00
-U	Vandal Proof Screw	123.00

LESS COVER	PLUG MATERIAL		A - PIPE SIZE:	Δ02"	Δ03"	Δ04"	05"	06"	08"
4420CI	CI Ferrule and Brz Plug			123.00	191.00	264.00	394.00	540.00	1,001.00
4420BRZ	All Bronze			POA	POA	POA	POA	POA	POA
WITH DEEP COVER	PLUG MATERIAL	COVER MATERIAL	A - PIPE SIZE: B - COVER SIZE DIA:	Δ02" 4 1/4"	Δ03" 5 1/2"	Δ04" 5 1/2"	05" 7"	06" 9 1/4"	08" 11 1/4"
4421	CI Ferrule and Brz Plug	†Chrome Plated (CP)		555.00	626.00	694.00	828.00	1,295.00	2,051.00
		Stainless Steel (-SS)		995.00	1,066.00	1,134.00	1,268.00	1,735.00	2,491.00
WITH SHALLOW COVER	PLUG MATERIAL	A - PIPE SIZE: COVER MATERIAL	B - COVER SIZE DIA:	Δ02" 4 1/4"	Δ03" 5 1/2"	Δ04" 5 1/2"	05" 7"	06" 9 1/4"	08" 11 1/4"
4422	CI Ferrule and Brz Plug	†Stainless Steel (-SS)		297.00	367.00	441.00	616.00	933.00	1,616.00
		Prime Coated Steel (-PC)		399.00	469.00	543.00	718.00	1,035.00	1,718.00
		Polished Bronze (-PB)		242.00	312.00	386.00	561.00	878.00	1,561.00
			C - SIZE	1 1/2"	2 1/2"	3 1/2"	4"	5"	6"
			D	3 1/2"	3 3/4"	4 1/4"	4 1/4"	4 1/4"	4 1/2"
			E DIA	*7 1/4"	*7 1/4"	*7 1/4"	*7 1/4"	9 1/4"	11 1/4"
			APPROX WT. LBS.	5	8	13	16	21	26

*Die Formed SS Cover Only

ΔSized for Service Weight and/or NO-HUB

REGULARLY FURNISHED: Duco Cast Iron Caulk Ferrule with Cast Bronze Taper Thread Plug with SS Round Cover and Screws. Type of Cover as Indicated by Figure Number Selected.

†REGULARLY FURNISHED

FIG. 4429 ROUND ADJUSTABLE NICKEL BRONZE TOP

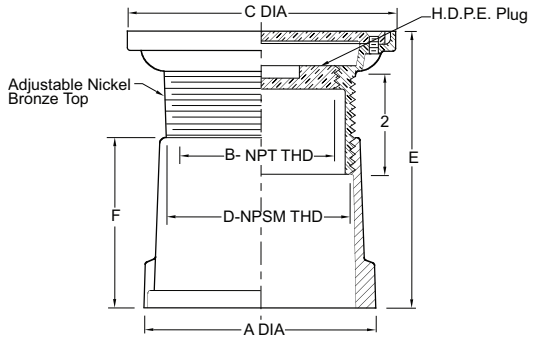

A (NOM)	B	C	D	E MIN	E MAX	F
02	1 1/2	4 1/4	2	5 3/8	6 3/4	4 1/2
03	2	4 1/2	2 1/2	3	4 3/8	2 1/4
04	3	5 3/4	3 1/2	3 1/2	5	2 1/2
06	3	5 3/4	3 1/2	4 1/2	6	3 5/8

4429C02NB	2" 4429 Caulk w/NB Top	**640.00**
4429C03NB	3" 4429 Caulk w/NB Top	**730.00**
4429C04NB	4" 4429 Caulk w/NB Top	**833.00**
4429C06NB	6" 4429 Caulk w/NB Top	**966.00**
4429C02PB	2" 4429 Caulk w/PB Top	**589.00**
4429C03PB	3" 4429 Caulk w/PB Top	**684.00**
4429C04PB	4" 4429 Caulk w/PB Top	**786.00**
4429C06PB	6" 4429 Caulk w/PB Top	**915.00**
4429Y02NB	2" 4429 No-Hub w/NB Top	**640.00**
4429Y03NB	3" 4429 No-Hub w/NB Top	**730.00**
4429Y04NB	4" 4429 No-Hub w/NB Top	**833.00**
4429Y06NBFB	6" 4429 No-Hub w/NB Top	**966.00**
4429Y02PB	2" 4429 No-Hub w/PB Top	**589.00**
4429Y03PB	3" 4429 No-Hub w/PB Top	**684.00**
4429Y04PB	4" 4429 No-Hub w/PB Top	**786.00**
4429Y06PBFB	6" 4429 No-Hub w/PB Top	**966.00**
4429L04NB	4" 4429 Speedi-Set SW w/NB Top	**773.00**
4429LXH04NB	4" 4429 Speedi-Set XH w/NB Top	**773.00**
4429L04PB	4" 4429 Speedi-Set SW w/PB Top	**727.00**
4429LXH04PB	4" 4429 Speedi-Set XH w/PB Top	**727.00**
		ADD FOR
-U	Vandal Proof (add to NB Top)	**123.00**
-U	Vandal Proof (add to PB Top)	**43.00**

REGULARLY FURNISHED: Duco Cast Iron Ferrule and Adjustable Nickel Bronze top with Solid Scoriated Cover and H.D.P.E. Plug.

FIG. 4430, 4431 CAULK FERRULE CLEANOUT LEAD SEAL PLUG W/SQUARE FRAME AND COVER

FUNCTION: Used in hub openings in drainage piping where a cleanout is required. The straight thread lead seal plug permits quick and easy removal. Grooves on outside of ferrule prevent turning. Type of cover as indicated by figure number selected. Both covers are used to cover cleanouts concealed in walls. The square design is particularly adaptable to adjacent walls, floors, ceilings, etc., that are finished of material in straight line patterns. The anchoring lugs provide easy means for securing the frame to the wall construction. The face-of-wall (4430) cover is for tile, masonry, or dry wall construction, and is usually installed on an opening provided in the finished wall. The flush-with-wall (4431) cover is for plaster or wet wall construction and is installed during the wall construction.

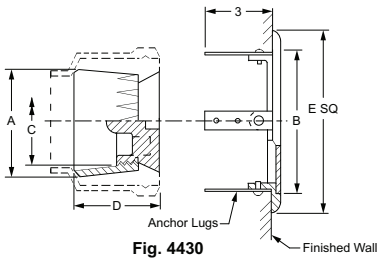

Fig. 4430

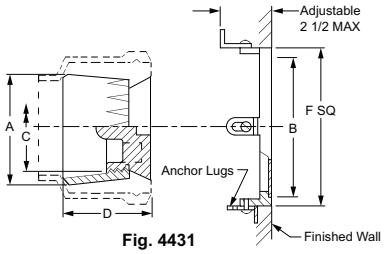

Fig. 4431

OPTIONS:

		ADD
-BB	Cast Bronze Ferrule and Plug	**POA**
-BP	Cast Bronze Lead Seal Plug	
	02, 03, 04, 05"	**246.00**
	06, 08"	**788.00**
-TH	Plug Tapped 1/4-20 w/T Handle for Plug	**164.00**
-U	Vandal Proof Screw	**123.00**
	Solid Scoriated Cover f/Flush Type Cover	**See Fig 4439**

		COVER MATERIAL	A - PIPE SIZE:	02"	03"	04"	05"	06"
			B - COVER SIZE SQ:	6 x 6"	6 x 6"	6 x 6"	8 x 8"	8 x 8"
4430	Face of Wall	†Chrome Plated (-CP)		973.00	1,050.00	1,120.00	1,642.00	1,791.00
		Nickel Bronze (-NB)		897.00	974.00	1,044.00	1,534.00	1,683.00
		Polished Bronze (-PB)		873.00	950.00	1,020.00	1,495.00	1,644.00
			A - PIPE SIZE:	02"	03"	04"	05"	06"
		COVER MATERIAL	B - COVER SIZE SQ:	6 x 6"	6 x 6"	6 x 6"	8 x 8"	8 x 8"
4431	Flush with Wall	†Chrome Plated (-CP)		973.00	1,050.00	1,120.00	1,642.00	1,791.00
		Nickel Bronze (-NB)		897.00	974.00	1,044.00	1,534.00	1,683.00
		Polished Bronze (-PB)		873.00	950.00	1,020.00	1,495.00	1,644.00
			C - SIZE	1 1/2"	2 1/2"	3 1/2"	4 1/2"	5 1/2"
			D	2 1/2"	2 3/4"	3"	3"	3"
			E SQ	7 3/4"	7 3/4"	7 3/4"	9 3/4"	9 3/4"
			F SQ	6 1/2"	6 1/2"	6 1/2"	8 1/2"	8 1/2"
			APPROX WT. LBS.	5	7	10	12	13

*Covers may be used with any of the above plugs

REGULARLY FURNISHED: Duco Cast Iron Caulk Ferrule with Cast Iron Lead Seal Plug, with Chrome Plated Bronze Square Frame and Secured Cover. Type of Cover as Indicated by Figure Number Selected.

†REGULARLY FURNISHED

FIG. 4432, 4433 CAULK FERRULE CLEANOUT LEAD SEAL PLUG W/ROUND FRAME AND COVER

FUNCTION: Used to cover cleanout plugs concealed in walls. Round design eliminates necessity for lining up with adjacent floors, ceilings, moldings, etc. The anchoring lugs provide easy means for securing the frame to the wall construction. The face-of-wall cover (4432) is for tile, masonry, or dry wall construction and is usually installed on an opening provided in the finished wall. The flush-with-wall cover (4433) is for plaster or wet wall construction and is installed during wall construction.

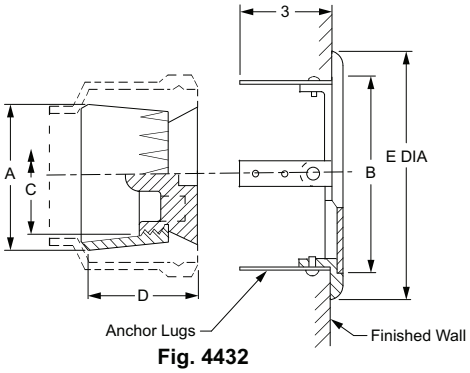

Fig. 4432

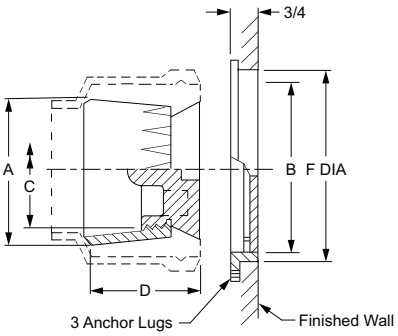

Fig. 4433

OPTIONS:

		ADD
-BB	Cast Bronze Ferrule and Plug	**POA**
-BP	Cast Bronze Lead Seal Plug	
	02, 03, 04, 05"	**246.00**
	06, 08"	**788.00**
-TH	Plug Tapped 1/4-20 w/T Handle for Plug	**164.00**
-U	Vandal Proof Screw	**123.00**
	Solid Scoriated Cover f/Flush Type Cover	**See Fig 4438**

		COVER MATERIAL	A - PIPE SIZE: / B - COVER SIZE DIA	02" / 4"	03" / 5 1/2"	04" / 6"	06" / 8"
4432	Face of Wall	†Chrome Plated (-CP)		631.00	705.00	777.00	1,400.00
		Nickel Bronze (-NB)		574.00	648.00	720.00	1,324.00
		Polished Bronze (-PB)		531.00	605.00	677.00	1,263.00
		COVER MATERIAL	A - PIPE SIZE: / B - COVER SIZE DIA	02" / 4"	03" / 5 1/2"	04" / 6"	06" / 8"
4433	Flush with Wall	†Chrome Plated (-CP)		631.00	705.00	777.00	1,400.00
		Nickel Bronze (-NB)		574.00	648.00	720.00	1,324.00
		Polished Bronze (-PB)		531.00	605.00	677.00	1,263.00
			C - SIZE	1 1/2"	2 1/2"	3 1/2"	5 1/2"
			D	2 1/2"	2 3/4"	3"	3"
			E DIA	6"	7"	7"	10"
			F DIA	4 1/2"	5 3/4"	6 1/2"	8 1/2"
			APPROX WT. LBS.	8	12	17	20

*10" Face of Wall Cover Not Available with 4432

REGULARLY FURNISHED: Duco Cast Iron Caulk Ferrule with Cast Iron Lead Seal Plug. Chrome Plated Bronze Round Frame and Secured Cover. Type of Cover as Indicated by Figure Number Selected.

†REGULARLY FURNISHED

FIG. 4434, 4435 CAULK FERRULE CLEANOUT TAPER THREAD PLUG W/SQUARE FRAME AND COVER

FUNCTION: Used to cover cleanout plugs concealed in walls. The square design is particularly adaptable to adjacent walls, floors, ceilings, etc., that are finished of material in straight line patterns. The anchoring lugs provide easy means for securing the frame to the wall construction. The face-of-wall cover (4434) is for tile, masonry, or dry wall construction and is usually installed on an opening provided in the finished wall. The flush-with-wall cover (4435) is for plaster or wet wall construction and is installed during the wall construction.

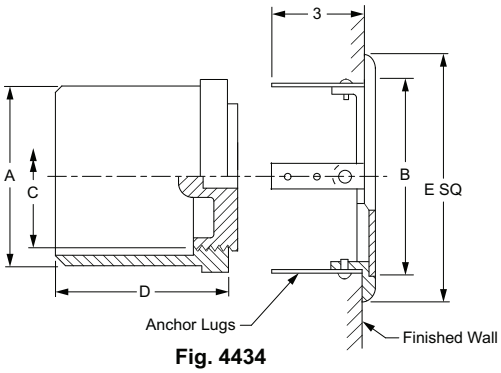

Fig. 4434

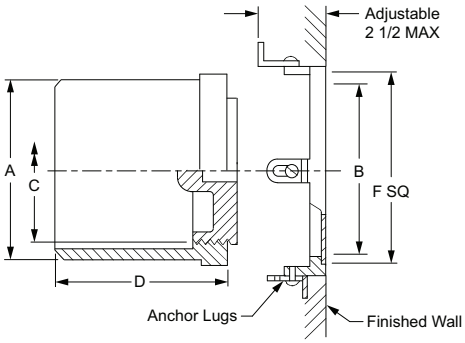

Fig. 4435

OPTIONS:

		ADD
-BB	Cast Bronze Ferrule and Plug	**POA**
-TH	Plug Tapped 1/4-20 w/T Handle for Plug	**164.00**
-U	Vandal Proof Screw	**123.00**
	Solid Scoriated Cover f/Flush Type Cover	**See Fig 4441**

		COVER MATERIAL	A - PIPE SIZE:	△02"	△03"	△04"	05"	06"	08"
			B - COVER SIZE SQ:	6 x 6"	6 x 6"	6 x 6"	8 x 8"	8 x 8"	10 x 10"
4434	Face of Wall	†Chrome Plated (-CP)		973.00	1,050.00	1,120.00	1,642.00	1,791.00	2,358.00
		Nickel Bronze (-NB)		897.00	974.00	1,044.00	1,534.00	1,683.00	2,229.00
		Polished Bronze (-PB)		873.00	950.00	1,020.00	1,495.00	1,644.00	2,208.00
			A - PIPE SIZE:	△02"	△03"	△04"	05"	06"	08"
		COVER MATERIAL	B - COVER SIZE SQ:	6 x 6"	6 x 6"	6 x 6"	8 x 8"	8 x 8"	10 x 10"
4435	Flush with Wall	†Chrome Plated (-CP)		973.00	1,050.00	1,120.00	1,642.00	1,791.00	2,358.00
		Nickel Bronze (-NB)		897.00	974.00	1,044.00	1,534.00	1,683.00	2,229.00
		Polished Bronze (-PB)		873.00	950.00	1,020.00	1,495.00	1,644.00	2,208.00
			C - SIZE	1 1/2"	2 1/2"	3 1/2"	4 1/2"	5 1/2"	7 1/2"
			D	3 1/2"	3 3/4"	4 1/4"	4 1/4"	4 1/4"	4 1/2"
			E SQ	7 3/4"	7 3/4"	7 3/4"	9 3/4"	9 3/4"	11 3/4"
			F SQ	6 1/2"	6 1/2"	6 1/2"	8 1/2"	8 1/2"	10 1/2"
			APPROX WT. LBS.	5	7	10	12	13	26

*Covers may be used with any of the above plugs
△Sized for Service Weight and/or NO-HUB

REGULARLY FURNISHED: Duco Cast Iron Caulk Ferrule with Cast Bronze Taper Thread Plug, Chrome Plated Bronze Square Frame and Secured Cover. Type of Cover as Indicated by Figure Number Selected.

†REGULARLY FURNISHED

FIG. 4436, 4437 CAULK FERRULE CLEANOUT TAPER THREAD PLUG W/ROUND FRAME AND COVER

FUNCTION: Used to cover cleanout plugs concealed in walls. Round design eliminates necessity for lining up with adjacent floors, ceilings, moldings, etc. The anchoring lugs provide easy means for securing the frame to the wall construction. The face-of-wall cover (4436) is for tile, masonry, or dry wall construction and is usually installed on an opening provided in the finished wall. The flush-with-wall cover (4437) is for plaster or wet wall construction and is installed during wall construction.

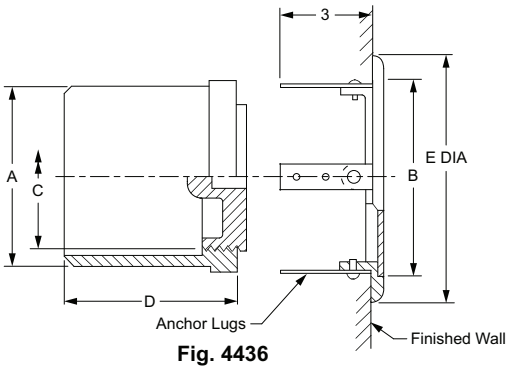

Fig. 4436

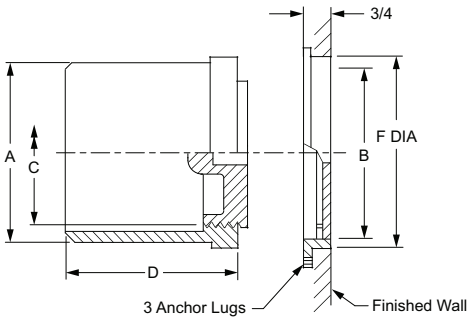

Fig. 4437

OPTIONS:

		ADD
-BB	Cast Bronze Ferrule and Plug	**POA**
-TH	Plug Tapped 1/4-20 w/T Handle for Plug	**164.00**
-U	Vandal Proof Screw	**123.00**
	Solid Scoriated Cover f/Flush Type Cover	**See Fig 4440**

		COVER MATERIAL	A - PIPE SIZE:	Δ02"	Δ03"	Δ04"	05"	06"	*08"
			B - COVER SIZE DIA:	4"	5 1/2"	6"	6"	8"	10"
4436	Face of Wall	†Chrome Plated (-CP)		631.00	705.00	777.00	903.00	1,400.00	-
		Nickel Bronze (-NB)		574.00	648.00	720.00	846.00	1,324.00	-
		Polished Bronze (-PB)		531.00	605.00	677.00	803.00	1,263.00	-
			A - PIPE SIZE:	Δ02"	Δ03"	Δ04"	05"	06"	*08"
		COVER MATERIAL	B - COVER SIZE DIA:	4"	5 1/2"	6"	6"	8"	10"
4437	Flush with Wall	†Chrome Plated (-CP)		631.00	705.00	777.00	903.00	1,400.00	2,405.00
		Nickel Bronze (-NB)		574.00	648.00	720.00	846.00	1,324.00	2,134.00
		Polished Bronze (-PB)		531.00	605.00	677.00	803.00	1,263.00	1,994.00
			C - SIZE	1 1/2"	2 1/2"	3 1/2"	4 1/2"	5 1/2"	7 1/2"
			D	3 1/2"	3 3/4"	4 1/4"	4 1/4"	4 1/4"	4 1/2"
			E DIA	6"	7"	7"	7"	10"	-
			F DIA	4 1/2"	5 3/4"	6 1/2"	6 1/2"	8 1/2"	10 1/2"
			APPROX WT. LBS.	8	12	17	19	20	25

ΔSized for Service Weight and/or NO-HUB

REGULARLY FURNISHED: Duco Cast Iron Caulk Ferrule with Cast Bronze Taper Thread Plug. Chrome Plated Bronze Round Frame and Secured Cover. Type of Cover as Indicated by Figure Number Selected.

†REGULARLY FURNISHED

FIG. 4438, 4439 CAULK FERRULE CLEANOUT LEAD SEAL PLUG W/FRAME AND SCORIATED COVER

FUNCTION: Used in hub openings where a floor or wall cover is required. Ribbing on outside of ferrule prevents turning of ferrule in the caulking lead.

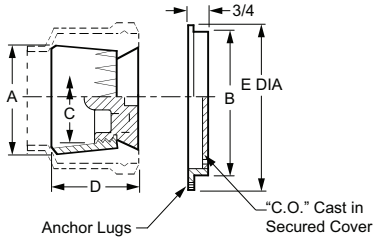

Fig. 4438

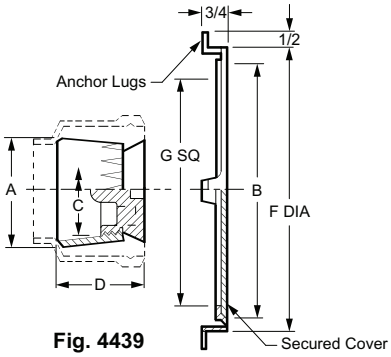

Fig. 4439

OPTIONS: **ADD**

-BB	Cast Bronze Ferrule	**POA**
-BP	Cast Bronze Lead Seal Plug	
	02, 03, 04, 05"	**246.00**
	06, 08"	**788.00**
-TH	Plug Tapped 1/4-20 Thread w/T Handle for Plug	**164.00**
-U	Vandal Proof Screw	**123.00**
	Cover Drilled in Center and Furnished with 1/4-20 x 2 1/2" Long Screw	**177.00**

		COVER MATERIAL	A - PIPE SIZE:	02"	03"	04"	05"	06"
			B - COVER SIZE DIA:	4"	5 1/2"	6"	6"	8"
4438	Flush Type Cover	Chrome Plated (-CP)		629.00	701.00	774.00	906.00	1,402.00
		†Nickel Bronze (-NB)		572.00	644.00	717.00	849.00	1,326.00
		Polished Bronze (-PB)		527.00	599.00	672.00	804.00	1,269.00
			A - PIPE SIZE:	02"	03"	04"	05"	06"
		COVER MATERIAL	B - COVER SIZE SQ:	6 x 6"	6 x 6"	6 x 6"	8 x 8"	8 x 8"
4439	Flush Type Cover	Chrome Plated (-CP)		897.00	968.00	1,036.00	1,534.00	1,682.00
		†Nickel Bronze (-NB)		897.00	968.00	1,036.00	1,534.00	1,682.00
		Polished Bronze (-PB)		797.00	868.00	936.00	1,387.00	1,535.00
			C - SIZE	1 1/2"	2 1/2"	3 1/2"	4 1/2"	5 1/2"
			D	2 1/2"	2 3/4"	3"	3"	3"
			E DIA	4 1/2"	5 3/4"	6 1/2"	6 1/2"	8 1/2"
			F SQ	7"	7"	7"	9"	9"
			G SQ	5 1/2"	5 1/2"	5 1/2"	7 1/2"	7 1/2"

REGULARLY FURNISHED: Duco Cast Iron Caulk Ferrule with Cast Iron Lead Seal Plug and Secured Scoriated Nickel Bronze Cover and Frame with Anchor Lugs. Type of Cover as Indicated by Figure Number Selected.

†REGULARLY FURNISHED

FIG. 4440, 4441 CAULK FERRULE CLEANOUT TAPER THREAD PLUG W/FRAME AND SCORIATED COVER

FUNCTION: Used in hub openings where a floor or wall cover is required. Face-of-Wall or Flush-with-Wall Cover available with finished wall.

Same as 4438 and 4439 but with Taper Thread Plug

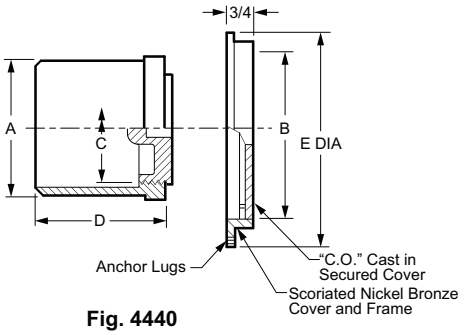

Fig. 4440

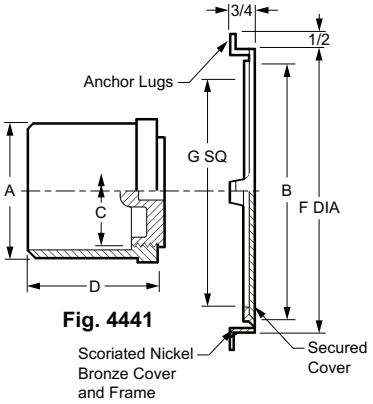

Fig. 4441

OPTIONS: **ADD**

-BB	Cast Bronze Ferrule	**POA**
-TH	Plug Tapped 1/4-20 Thread w/T Handle for Plug	**164.00**
-U	Vandal Proof Screw	**123.00**
	Cover Drilled in Center and Furnished with 1/4-20 x 2 1/2" Long Screw	**177.00**
	Smooth Cover for Flush-Type Cover	**See Fig 4435, 4437**

		COVER MATERIAL	A - PIPE SIZE:	△02"	△03"	△04"	05"	06"	08"
			B - COVER SIZE DIA:	4"	5 1/2"	6"	6"	8"	10"
4440	Flush Type Cover	Chrome Plated (-CP)		629.00	701.00	774.00	906.00	1,402.00	2,408.00
		†Nickel Bronze (-NB)		572.00	644.00	717.00	849.00	1,326.00	2,137.00
		Polished Bronze (-PB)		527.00	599.00	672.00	804.00	1,269.00	1,998.00
			A - PIPE SIZE:	02"	03"	04"	05"	06"	08"
		COVER MATERIAL	B - COVER SIZE SQ:	6 x 6"	6 x 6"	6 x 6"	8 x 8"	8 x 8"	10 x 10"
4441	Flush Type Cover	Chrome Plated (-CP)		897.00	971.00	1,047.00	1,534.00	1,682.00	2,230.00
		†Nickel Bronze (-NB)		897.00	971.00	1,047.00	1,534.00	1,682.00	2,230.00
		Polished Bronze (-PB)		797.00	871.00	947.00	1,387.00	1,535.00	2,080.00
			C - SIZE	1 1/2"	2 1/2"	3 1/2"	4 1/2"	5 1/2"	7 1/2"
			D	3 1/2"	3 3/4"	4 1/4"	4 1/4"	4 1/4"	4 1/2"
			E DIA	4 1/2"	5 3/4"	6 1/2"	6 1/2"	8 1/2"	10 1/2"
			F SQ	7"	7"	7"	9"	9"	11"
			G SQ	5 1/2"	5 1/2"	5 1/2"	7 1/2"	7 1/2"	9 1/2"

△Sized for Service Weight and/or NO-HUB

REGULARLY FURNISHED: Duco Cast Iron Caulk Ferrule with Cast Bronze Taper Thread Plug and Secured Scoriated Nickel Bronze Cover and Frame with Anchor Lugs. Type of Cover as Indicated by Figure Number Selected.

†REGULARLY FURNISHED

FIG. 4450, 4452 CAULK FERRULE CLEANOUT FULL CALIBER FERRULE TAPER THREAD PLUG W/ROUND COVER

FUNCTION: Used in hub openings in drainage piping where a cleanout is required. Plug size equals ferrule size. Face-of-Wall cover is desirable on finished walls.

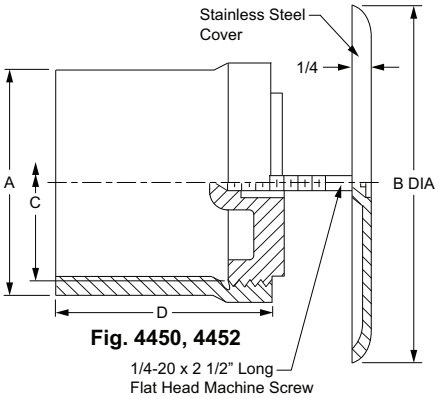

Fig. 4450, 4452

OPTIONS:		ADD
-LS	6" Long Center Screw	57.00
-TH	Plug Tapped 1/4-20 Thread w/T Handle for Plug	164.00
-U	Vandal Proof Screw	123.00

LESS COVER	CLEANOUT MATERIAL		A - PIPE SIZE:	02"	03"	04"
4450	†CI Ferrule and Bronze Plug			237.00	308.00	508.00
	All Bronze			POA	POA	POA
			A - PIPE SIZE:	02"	03"	04"
WITH COVER	CLEANOUT MATERIAL	COVER MATERIAL	B - COVER SIZE DIA:	4 1/4"	5 1/2"	7"
4452	†CI Ferrule and Bronze Plug	†Stainless Steel (-SS)		411.00	481.00	724.00
		Prime Coated Steel (-PC)		356.00	426.00	669.00
		Polished Bronze (-PB)		356.00	426.00	669.00
			C - SIZE	2 1/2"	3"	4"
			D	3 1/2"	3 3/4"	4 1/4"
			APPROX WT. LBS.	5	8	13

REGULARLY FURNISHED: Duco Cast Iron Full Calibre Caulk Ferrule with Cast Bronze Taper Thread Plug, with Stainless Steel Round Cover and Screw as Indicated by Figure Number Selected.

FIG. 4470, 4472 TAPER THREAD PLUG WITH ROUND COVER

FUNCTION: Used in female pipe size openings in drainage piping where a cleanout is required. Countersunk plugs have slot sized to receive 1/2" thick steel bar stock. Face-of-wall cover is desirable on finished walls.

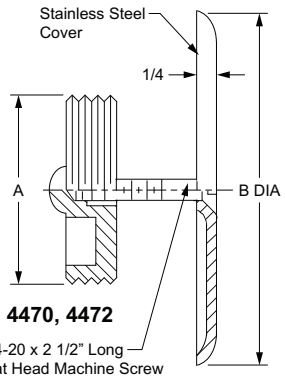

Fig. 4470, 4472

OPTIONS:		ADD
-LS	6" Long Center Screw	57.00
-TH	Plug Tapped 1/4-20 Thread w/T Handle for Plug	164.00
-U	Vandal Proof Screw	123.00

LESS COVER	PLUG MATERIAL	A - PLUG SIZE:	015"	02"	0250"	03"	0350"	04"	05"	06"	08"	10"
4470	†Bronze Plug		57.00	70.00	91.00	123.00	202.00	215.00	335.00	448.00	924.00	1,371.00
WITH COVER	COVER MATERIAL	B - COVER SIZE DIA:	4 1/4"	4 1/4"	4 1/4"	5 1/2"	5 1/2"	5 1/2"	7"	9 1/4"	11 1/4"	11 1/4"
4472	†Stainless Steel (-SS)		237.00	240.00	264.00	297.00	370.00	394.00	552.00	849.00	1,537.00	1,985.00
	Prime Coated Steel (-PC)		339.00	342.00	366.00	399.00	472.00	496.00	654.00	951.00	1,639.00	2,087.00
	Polished Bronze (-PB)		182.00	185.00	209.00	242.00	315.00	339.00	497.00	794.00	1,482.00	1,930.00
		APPROX WT. LBS.	2	2	3	3	5	5	7	8	11	12

REGULARLY FURNISHED: Cast Bronze Taper Thread Plug with Stainless Steel Round Cover and Screw as indicated by Figure Number.

†REGULARLY FURNISHED

CLEANOUTS

FIG. 4510, 4530 SERIES CLEANOUT TEE W/COUNTERSUNK PLUG AND ROUND ACCESS COVER

FUNCTION: Used in concealed drainage lines where a cleanout is desired. Removable face-of-wall cover allows easy access to closure plug.

OPTIONS:		ADD
-LS	6" Long Center Screw	57.00
-LSU	6" Long Vandal Proof Center Screw	179.00
-TH	Plug Tapped 1/4-20 w/T Handle for Plug	164.00
-U	Vandal Proof Screw (1/4-20 X 2 1/2")	123.00
Y	No-Hub Tee (02, 03, 04" only)	N/C

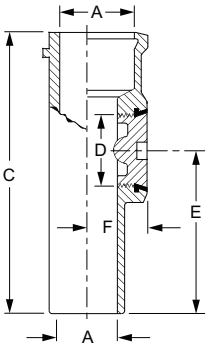

Fig. 4510

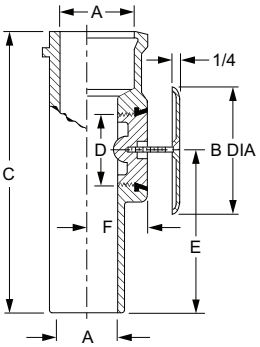

Fig. 4530

LESS COVER			A - PIPE SIZE:	02"	03"	04"	05"	06"
4510	Gasket Seal Cast Iron Plug			293.00	365.00	566.00	1,063.00	1,612.00
4511	Gasket Seal Bronze Plug			539.00	609.00	814.00	1,309.00	2,400.00
4512	Taper Thread Bronze Plug			539.00	609.00	814.00	1,309.00	2,400.00
WITH COVER		**COVER MATERIAL**	**B - COVER SIZE DIA:**	**4 1/4"**	**5 1/2"**	**7"**	**7"**	**9 1/4"**
With Cast Iron Plug								
4530	Gasket Seal Plug	†Stainless Steel (-SS)		467.00	538.00	786.00	1,278.00	2,010.00
		Prime Coated Steel (-PC)		571.00	642.00	890.00	1,382.00	2,114.00
		Polished Bronze (-PB)		412.00	483.00	731.00	1,223.00	1,955.00
With Bronze Plug								
4531	Gasket Seal Plug	†Stainless Steel (-SS)		715.00	783.00	1,031.00	1,533.00	2,798.00
		Prime Coated Steel (-PC)		819.00	887.00	1,135.00	1,637.00	2,902.00
		Polished Bronze (-PB)		660.00	728.00	976.00	1,478.00	2,743.00
With Bronze Plug								
4532	Taper Thread	†Stainless Steel (-SS)		715.00	783.00	1,031.00	1,533.00	2,798.00
		Prime Coated Steel (-PC)		819.00	887.00	1,135.00	1,637.00	2,902.00
		Polished Bronze (-PB)		660.00	728.00	976.00	1,478.00	2,743.00
			C	10 1/2"	11 3/4"	12"	*13"	16"
			D SIZE	1 1/2"	2 1/2"	3 1/2"	4 1/2"	6"
			E	6 1/4"	7"	7"	8 1/2"	9"
			F	2"	2 1/2"	3"	4"	4 1/2"

*This Dimension becomes 15" for the 4512 and 4532.

REGULARLY FURNISHED: Duco Cast Iron Cleanout Tee and Countersunk Plug with Stainless Steel Round Cover and Screw as Indicated by Figure Number Selected.

†REGULARLY FURNISHED

FIG. 4550, 4555 SERIES CLEANOUT TEE W/SQUARE FRAME AND COVER

FUNCTION: Used in concealed drainage lines where a cleanout is desired. Face-of-Wall Cover should be used for tile, masonry or drywall construction. The Flush-with-Wall cover is ideal for plaster or wet wall construction.

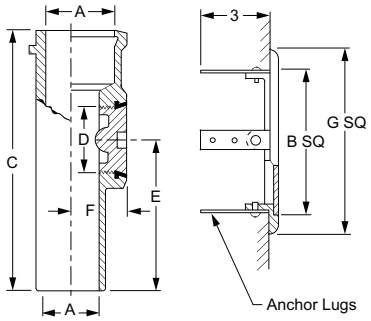

Fig. 4550

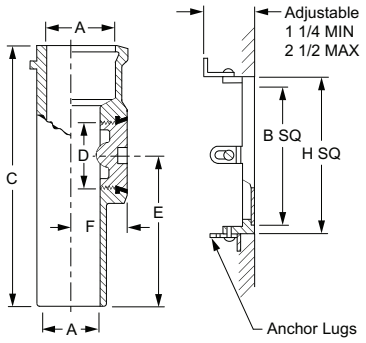

Fig. 4555

OPTIONS:

		ADD
-U	Vandal Proof Screw (1/4-20 X 2 1/2")	123.00
Y	No-Hub Tee (02, 03, 4" only)	N/C

FACE OF WALL COVER			A - PIPE SIZE:	02"	03"	04"	05"	06"
With Cast Iron Plug		COVER MATERIAL	B - COVER SIZE SQ:	6 x 6"	6 x 6"	6 x 6"	8 x 8"	10 x 10"
4550	Gasket Seal Plug	†CP Frame & Cover (-CP)		1,147.00	1,214.00	1,422.00	2,313.00	2,968.00
		NB Frame & Cover (-NB)		1,071.00	1,138.00	1,346.00	2,205.00	2,839.00
		PB Frame & Cover (-PB)		967.00	1,034.00	1,242.00	2,061.00	2,689.00
With Bronze Plug								
4551	Gasket Seal Plug	†CP Frame & Cover (-CP)		1,396.00	1,461.00	1,668.00	2,562.00	3,761.00
		NB Frame & Cover (-NB)		1,320.00	1,385.00	1,592.00	2,454.00	3,632.00
		PB Frame & Cover (-PB)		1,216.00	1,281.00	1,488.00	2,310.00	3,482.00
With Bronze Plug								
4553	Taper Thread Plug	†CP Frame & Cover (-CP)		1,396.00	1,461.00	1,668.00	2,562.00	3,761.00
		NB Frame & Cover (-NB)		1,320.00	1,385.00	1,592.00	2,454.00	3,632.00
		PB Frame & Cover (-PB)		1,216.00	1,281.00	1,488.00	2,310.00	3,482.00
FLUSH WITH WALL COVER								
With Cast Iron Plug								
4555	Gasket Seal Plug	†CP Frame & Cover (-CP)		1,147.00	1,214.00	1,422.00	2,313.00	2,968.00
		NB Frame & Cover (-NB)		1,071.00	1,138.00	1,346.00	2,205.00	2,839.00
		PB Frame & Cover (-PB)		967.00	1,034.00	1,242.00	2,061.00	2,689.00
With Bronze Plug								
4556	Gasket Seal Plug	†CP Frame & Cover (-CP)		1,396.00	1,461.00	1,668.00	2,562.00	3,761.00
		NB Frame & Cover (-NB)		1,320.00	1,385.00	1,592.00	2,454.00	3,632.00
		PB Frame & Cover (-PB)		1,216.00	1,281.00	1,488.00	2,310.00	3,482.00
With Bronze Plug								
4558	Taper Thread Plug	†CP Frame & Cover (-CP)		1,396.00	1,461.00	1,668.00	2,562.00	3,761.00
		NB Frame & Cover (-NB)		1,320.00	1,385.00	1,592.00	2,454.00	3,632.00
		PB Frame & Cover (-PB)		1,216.00	1,281.00	1,488.00	2,310.00	3,482.00
			C	10 1/2"	11 3/4"	12"	*13"	16"
			D SIZE	1 1/2"	2 1/2"	3 1/2"	4 1/2"	6"
			E	6 1/4"	7"	7"	8 1/2"	9"
			F	2"	2 1/2"	3"	4"	4 1/2"
			G SQ	7 3/4"	7 3/4"	7 3/4"	9 3/4"	11 3/4"
			H SQ	6 1/2"	6 1/2"	6 1/2"	8 1/2"	10 1/2"

*This Dimension becomes 15" for the 4553 and 4558.

REGULARLY FURNISHED: Duco Cast Iron Cleanout Tee and Countersunk Plug with Chrome Plated Bronze Square Frame and Secured Cover. Type of Cover as Indicated by Figure Number Selected.

Spigot Outlet sized for service weight and/or No-Hub.

†REGULARLY FURNISHED

FIG. 4710, 4715 ROUND FACE-OF-WALL ACCESS COVER AND SCREW

FUNCTION: Used to conceal cleanout closures in walls. The round access cover is mounted on the surface of the finished wall and is directly secured by the screw to a tapping which must be provided in the cleanout plug. Shallow plates are preferred for all installations except where the cleanout plug protrudes beyond the finished wall surface, in which case the deep type cover must be used.

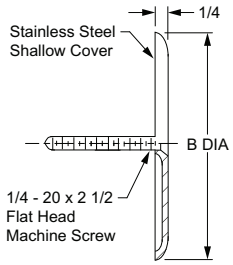

Fig. 4710

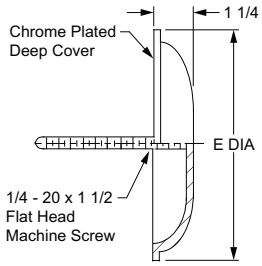

Fig. 4715

OPTIONS:

		ADD
-LS	6" Long Center Screw	57.00
-LSU	6" Long Vandal Proof Center Screw	180.00
-U	Vandal Proof Screw (1/4-20 X 2 1/2")	123.00

			PLUG SIZE	1 1/2", 2", 2 1/2"	3" 3 1/2", 4"	5"	6"	8", 10"
		COVER MATERIAL	B - COVER SIZE DIA:	4 1/4"	5 1/2"	7"	9 1/4"	11 1/4"
4710	Shallow Cover	†Stainless Steel (-SS)		180.00	180.00	217.00	394.00	616.00
		Prime Coated Steel (-PC)		284.00	284.00	320.00	496.00	720.00
		Polished Bronze (-PB)		125.00	125.00	163.00	339.00	720.00
			PLUG SIZE	1 1/2", 2", 2 1/2"	3" 3 1/2", 4"	5"	6"	8", 10"
		COVER MATERIAL	E - COVER SIZE DIA:	*7 1/4"	*7 1/4"	*7 1/4"	9 1/4"	11 1/4"
4715	Deep Cover	†Stainless Steel (-SS)		-	-	440.00	-	-
		Chrome Plated (-CP) or Nickel Bronze (-NB)		-	-	-	748.00	1,050.00
		Polished Bronze (-PB)		-	-	-	689.00	991.00

*Die formed SS cover only.

REGULARLY FURNISHED: Stainless Steel Shallow Cover or Chrome Plated Bronze Deep Cover with Center Screw as Indicated by Figure Number Selected.

FIG. 4720, 4725 WALL ACCESS SECURED COVER WITH ROUND FRAME

FUNCTION: Used to cover cleanout plugs, valves, controls or equipment concealed in walls. The round design eliminates necessity for lining up with adjacent floors, ceilings, moldings, etc. The anchoring lugs provide easy means for securing the frame to the wall construction. The face-of-wall cover is for tile, masonry, or dry wall construction and is usually installed on an opening provided in the finished wall. The flush-with-wall cover is for plaster or wet wall construction and is installed during the wall construction.

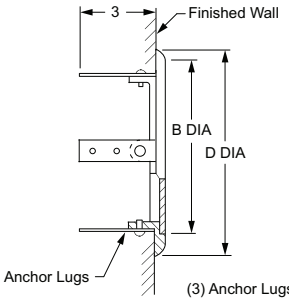

Fig. 4720

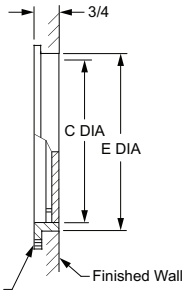

Fig. 4725

OPTIONS:

		ADD
-U	Vandal Proof Screws	123.00

			PLUG SIZE	2"	3"	4"	5"	6"	8"
			B DIA: COVER SIZE	4"	5 1/2"	6"	8"	8"	-
		COVER MATERIAL	D DIA:	6"	7"	7 1/2"	10"	10"	-
4720	Face of Wall	†Chrome Plated (-CP)		511.00	511.00	511.00	511.00	863.00	-
		Nickel Bronze (-NB)		449.00	449.00	449.00	449.00	786.00	-
		Polished Bronze (-PB)		412.00	412.00	412.00	449.00	726.00	-
			PLUG SIZE	2"	3"	4"	5"	6"	8"
			B DIA - COVER SIZE:	4"	5 1/2"	6"	6"	8"	10"
		COVER MATERIAL	E DIA:	4 1/2"	5 3/4"	6 1/2"	6 1/2"	8 1/2"	10 1/2"
4725	Flush With Wall	†Chrome Plated (-CP)		511.00	511.00	511.00	511.00	863.00	1,400.00
		Nickel Bronze (-NB)		449.00	449.00	449.00	449.00	786.00	1,129.00
		Polished Bronze (-PB)		412.00	412.00	412.00	412.00	726.00	989.00
			APPROX WT. LBS.	2	4	5	7	7	8

REGULARLY FURNISHED: Chrome Plated Bronze Round Frame and Secured Cover. Type of Cover as Indicated by Figure Number Selected.

†REGULARLY FURNISHED

FIG. 4730, 4735 WALL ACCESS SECURED COVER WITH SQUARE FRAME

FUNCTION: Used to cover cleanout plugs, valves, controls or equipment concealed in walls. The square design is particularly adaptable to adjacent walls, floors, ceilings, etc. that are finished of material in straight line patterns. The anchoring lugs provide easy means for securing the cover to the wall construction. The face-of-wall cover is for tile, masonry, or dry wall construction and is usually installed on an opening provided in the finished wall. The flush-with-wall cover is for plaster or wet wall construction and is installed during the wall construction.

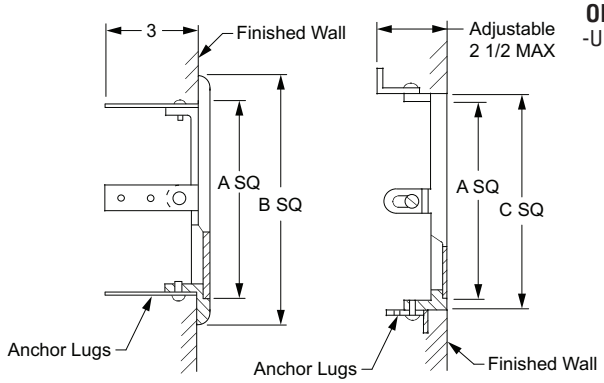

Fig. 4730 Fig. 4735

OPTIONS: **ADD**
-U Vandal Proof Screws **123.00**

			A - OPENING SIZE SQ:	6" x 6"	8" x 8"	10" x 10"	12" x 12"	15" x 15"
			B - COVER SIZE SQ:	7 3/4"	9 3/4"	11 3/4"	13 3/4"	16 3/4"
			C - COVER SIZE SQ:	6 1/2"	8 1/2"	10 1/2"	12 1/2"	15 1/2"
		COVER MATERIAL						
4730	Face of Wall	†CP Frame & Cover (-CP)		854.00	1,248.00	1,355.00	1,462.00	2,259.00
		NB Frame & SS Cover (-NB)		778.00	1,140.00	1,226.00	1,325.00	2,054.00
		PB Frame & Cover (-PB)		674.00	996.00	1,076.00	1,161.00	1,889.00
4735	Flush With Wall	†CP Frame & Cover (-CP)		854.00	1,248.00	1,355.00	1,462.00	2,259.00
		NB Frame & SS Cover (-NB)		778.00	1,140.00	1,226.00	1,325.00	2,054.00
		PB Frame & Cover (-PB)		674.00	996.00	1,076.00	1,161.00	1,889.00
			APPROX WT. LBS.	3	5	8	10	26

REGULARLY FURNISHED: Chrome Plated Bronze Square Frame with Anchor Lugs and Secured Cover. Type of Cover as Indicated by Figure Number Selected.

FIG. 4740, 4745 WALL SQUARE FLUSH VALVE BOX

FUNCTION: Used to cover flush valves which are concealed in the wall construction, and provide a means of actuating the valves by handle, push button or pedal, and at the same time to provide access from the toilet room to adjust or maintain the valve. The face-of-wall box is for tile, masonry, or dry wall construction. The open back box is installed in the wall by means of anchor or nail holes provided. The flush-with-wall box is for plaster or wet wall construction and is installed prior to wall finish. The adjustable anchoring lugs provide a means of securely anchoring the box, so that the face of the cover will be flush with the finished wall.

OPTIONS: **ADD**
-U Vandal Proof Screws **123.00**
Flush Valve Handle Hole* **191.00**

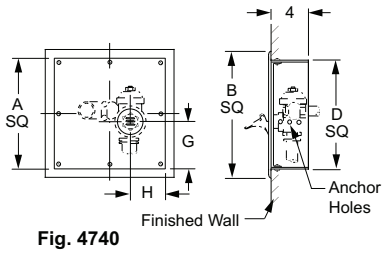

Fig. 4740

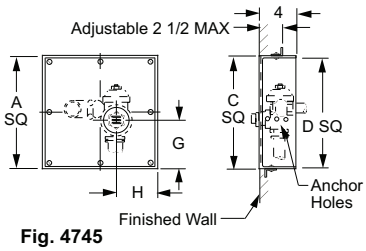

Fig. 4745

			A - OPENING SIZE SQ:	10" x 10"	12" x 12"	15" x 15"
			B - COVER SIZE SQ:	11 3/4"	13 3/4"	16 3/4"
			C - COVER SIZE SQ:	10 1/2"	12 1/2"	15 1/2"
			D - OPENING SIZE SQ:	10"	12"	15"
		COVER MATERIAL				
4740	Face of Wall	†CP Frame & Cover (-CP)		2,592.00	2,900.00	3,167.00
		NB Frame & SS Cover (-NB)		2,355.00	2,636.00	2,874.00
		PB Frame & Cover (-PB)		1,884.00	2,320.00	2,550.00
4745	Flush With Wall	†CP Frame & Cover (-CP)		2,592.00	2,900.00	3,167.00
		NB Frame & SS Cover (-NB)		2,355.00	2,636.00	2,874.00
		PB Frame & Cover (-PB)		1,884.00	2,320.00	2,550.00
			APPROX WT. LBS.	14	18	26

NOTE: G and H dimensions depend on Flush Valve being used. Always specify location and Manufacturers Make and Model.

*Specify location and manufacturers make and model.

REGULARLY FURNISHED: Chrome Plated Bronze Square Frame and Cover Secured with Screws, Aluminum Frame and Anchors.

†REGULARLY FURNISHED

FIG. 4760 SERIES - DRYWALL ACCESS DOORS

4760 Series doors are ideally suited for masonry, tile, or wood wall and ceiling surfaces. The door and frame are fabricated from 16 gage, galvannealed steel with a prime coat finish. The hinge is a Concealed Pivoting Rod Hinge. Doors 24" or larger are provided with a continuous piano hinge. The latch is screwdriver-operated. Optional latches include the CL- Cylinder Lock, AKL- Allen Key Latch, and TH- T Handle.

For Pricing information on this Product Series contact your local Jay R. Smith Mfg. Co. representative.

FIG. 4762 SERIES - DRYWALL ACCESS DOORS

4762 Series doors are ideally suited for new installations or for remodeling in masonry, tile, wood or other wall and ceiling surfaces. Door features rounded safety corners. Door and frame are fabricated from 14 gauge, type 304, stainless steel with a satin finish on exposed surface. Frame is one piece construction, 1" wide and provides perfect concealment of the rough wall opening. Wall frame is provided with 1/4" mounting holes for fastening within the furred spaces allowing faster installation and fixing maximum clearance. Concealed pivoting rod hinge prevents distortion and closes door squarely. Doors 24" or larger are provided with a continuous piano hinge. Latch is screwdriver operated. Finish is a prime coat suitable for painting.Optional latches include the CL- Cylinder Lock, AKL- Allen Key Latch, and TH- T Handle.

For Pricing information on this Product Series contact your local Jay R. Smith Mfg. Co. representative.

FIG. 4765 SERIES - PLASTERED WALL ACCESS DOORS

4765 Series doors are designed for plaster construction. The door has a 3/4" plaster ground for plaster finish. Door and frame are fabricated from 16 gage, galvannealed steel with a prime coat finish. Steel is an optional finish. Frame has 1/4" mounting holes to facilitate installation. The door has a concealed pivoting rod hinge that prevents distortion. Standard latch is screwdriver-operated. Optional latches include the CL- Cylinder Lock Latch and AKL- Allen Key Latch.

For Pricing information on this Product Series contact your local Jay R. Smith Mfg. Co. representative.

FIG. 4767 SERIES - PLASTERED WALL ACCESS DOORS

4767 Series doors are designed for plaster construction. The door has a 3/4" plaster ground for plaster finish. Door and frame are fabricated from 14 gauge, type 304, stainless steel with a satin finish on exposed surface. Frame has 1/4" mounting holes to facilitate installation. Concealed pivoting rod hinge prevents distortion and closes door squarely. Latch is screwdriver operated. Finish is a prime coat suitable for painting. Optional latches include the CL- Cylinder Lock Latch and AKL- Allen Key Latch.

For Pricing information on this Product Series contact your local Jay R. Smith Mfg. Co. representative.

FIG. 4768 SERIES - FIRE RATED WALL ACCESS DOORS

4768 Series doors are Fire Rated by UL for 1-1/2 hours, "B" Label, and meet the ANSI-UL 10B standard. The door and frame are fabricated from 16 gage, galvannealed steel with a prime coat finish. The door has a heavy duty spring to assure latching. A concealed hinge operates completely out of sight. The Exterior Latch is recessed and is operated using a ring attached to the sliding bolt; an interior latch release slide is included.

For Pricing information on this Product Series contact your local Jay R. Smith Mfg. Co. representative.

FIG. 4770 SERIES - ACOUSTICAL PLASTER ACCESS DOORS

4770 Series doors are designed to install flush with the plaster surface, assuring an attractive finish. Doors are recessed 5/8". The door and frame are fabricated from 16 gage, galvannealed steel with a prime coat finish. The frame has a 3" wide metal lath on all four sides to key into the plaster. The door has a concealed, recessed hinge and comes standard with a screwdriver-operated.

For Pricing information on this Product Series contact your local Jay R. Smith Mfg. Co. representative.

†REGULARLY FURNISHED

FIG. 4771 SERIES - METAL LATCH ACCESS DOORS

4771 Series doors are designed for plaster construction. The door has a 3" wide metal lath on all four sides for keying into plaster. Door and frame are fabricated from 16 gage, galvannealed steel with a prime coating. The door has a concealed pivoting rod hinge. Doors 24" or larger have a continuous piano hinge. Standard latch is screwdriver-operated. Optional latches include the CL- Cylinder Lock Latch and AKL- Allen Key Latch.

For Pricing information on this Product Series contact your local Jay R. Smith Mfg. Co. representative.

FIG. 4772 SERIES - ACOUSTICAL TILE ACCESS DOORS

4772 Series doors are designed for use with acoustical tile or gypsum board walls and ceilings. The door is engineered to install flush, virtually concealed. Door and frame are constructed from galvannealed steel with a prime coat finish; the door is 16 gage and frame is 12 gage. The door has a concealed hinge and comes standard with a screwdriver-operated latch. Optional latches include the CL- Cylinder Lock Latch and AKL- Allen Key Latch.

For Pricing information on this Product Series contact your local Jay R. Smith Mfg. Co. representative.

FIG. 4773 SERIES - FIRE RATED CEILING ACCESS DOORS

4773 Series doors are rated by UL for wall use for 1.5 hours, "B" Label. Warnock Hersey rates 4773 Series doors for 3 hours in ceilings and 2 hours in walls. The door is fabricated from 20 gage, galvannealed steel with a prime coat finish. The door panel is provided with 2" of insulation in a sandwich type construction. Includes an exterior latch that features a knurled knob and key operation. An interior latch release slide is included, enabling the door to be opened from the inside.

For Pricing information on this Product Series contact your local Jay R. Smith Mfg. Co. representative.

FIG. 4774 SERIES - CEILING FIRE RESISTANT ACCESS DOORS

4774 Series doors can be used in a suspended drywall ceiling as part of a fire rated ceiling assembly. Door and frame are constructed from galvannealed steel with a prime coat finish; the door is 16 gage and frame is 18 gage. The door has a continuous piano type hinge; a screwdriver-operated latch is standard. Optional latches include the CL- Cylinder Lock Latch and AKL- Allen Key Latch.

For Pricing information on this Product Series contact your local Jay R. Smith Mfg. Co. representative.

FIG. 4775 SERIES - DUCT ACCESS DOORS

4775 Series doors provide access to equipment installed in ducts. The door panels are insulated and gaskets between the panel and frame will assure a tight seal. The door and frame are fabricated from 24 gage, galvanized steel. The frame is provided with knock-over tabs and easily attached to the duct. The hinge is continuous piano type. Cam Latch is standard. A No-Hinge Cam Latch is an option.

For Pricing information on this Product Series contact your local Jay R. Smith Mfg. Co. representative.

FIG. 4777 SERIES - DRYWALL BEAD ACCESS DOORS

4777 Series doors are designed for flush installation in drywall surfaces. The door and frame are fabricated from 16 gage, galvannealed steel with a prime coat finish. A steel finish is optional. A Concealed Pivoting Rod Hinge prevents distortion. Doors 24" or larger are provided with a continuous piano hinge. Latch is screwdriver-operated. Optional latches include the CL- Cylinder Lock, AKL- Allen Key Latch, and TH- T Handle.

For Pricing information on this Product Series contact your local Jay R. Smith Mfg. Co. representative.

†REGULARLY FURNISHED

FIG. 4778 SERIES - SURFACE ACCESS DOORS

4778 Series doors are designed for surface installation on drywall, masonry or thin-coat plaster. The door features rounded safety corners and is attached to the frame with a continuous piano hinge. The door and frame are fabricated from 14 gage, galvannealed steel with a prime coat suitable for painting. Standard latch is screwdriver-operated. Optional latches include the CL- Cylinder Lock Latch, AKL- Allen Key Latch, and TH- T Handle Latch

For Pricing information on this Product Series contact your local Jay R. Smith Mfg. Co. representative.

FIG. 4779 SERIES - EXTERIOR DOOR FOR WALLS AND CEILINGS

4779 Series doors and frames are fabricated from 16 gage, galvannealed steel with a prime coat finish. The door has 1” thick rigid foam insulation and a neoprene gasket on four sides. The door has a heavy duty spring to assure positive latching. The hinge is concealed so that only the door and frame are visible. The exterior latch is a cylinder lock that features a knurled knob and key operation.

For Pricing information on this Product Series contact your local Jay R. Smith Mfg. Co. representative.

FIG. 4781 SERIES - SLAMMER ACCESS DOORS

4781 Series doors allow maintenance personnel access to plumbing chases, shut-off valves, and electrical apparatuses located behind finished walls without sacrificing security. The door is fabricated from 10 gage steel and is provided with a high security, vandal resistant, detention type lock. The latch is a detention type deadbolt lock. Hinges are heavy duty and are welded to the door and frame.

For Pricing information on this Product Series contact your local Jay R. Smith Mfg. Co. representative.

FIG. 4782 SERIES - SHUR-LOC ACCESS DOORS

4782 Series doors are designed for drywall, masonry or concrete construction in environments where a secure access door is required. The door and frame are fabricated from 14 gage, galvannealed steel with a prime coat and the door is provided with a 16 gage vertical reinforcement channel. The lock allows removal of the key when it is engaged in the locked position. The hinge is a concealed type. Doors 24” or larger are provided with a continuous piano hinge.

For Pricing information on this Product Series contact your local Jay R. Smith Mfg. Co. representative.

FIG. 4783 SERIES - VALVE BOX ACCESS DOORS

4783 Series doors provide access to all types of valves and controls concealed in the wall. Door and frame shall be 16 gage galvannealed steel with a prime coat finish. Frame is a one piece construction 1” wide and produces perfect concealment of the rough wall openings. Hinge is a concealed continuous piano hinge. The standard latch is screwdriver-operated. Optional latches include CL- Cylinder Lock and AKL- Allen Key Latch.

For Pricing information on this Product Series contact your local Jay R. Smith Mfg. Co. representative.

†REGULARLY FURNISHED

FIG. 4784 SERIES - WEATHER STRIP REMOVABLE ACCESS DOORS

4784 Series doors are designed with flush gaskets between the panel and frame to ensure flush air seal in all types of walls and ceilings. The door and frame shall be 16 gage galvannealed steel with a prime coat finish. The frame is 1" wide and produces perfect concealment of the rough wall openings. The door is fully removable and held in place by multiple latches. The standard latch is screwdriver-operated. AKL- Allen Key Latch is optional.

For Pricing information on this Product Series contact your local Jay R. Smith Mfg. Co. representative.

FIG. 4786 SERIES - FLUSH VALVE PANEL AND FRAME

The 4786 Series panels are designed for back supply toilets and urinals where the flush valve is built into the wall. This panel allows easy access to the flush valve. The Wall Panel is heavy gage, type 304 teel with exterior surface polished to a satin finish. It is provided with a 1-3/4" diameter hole for the flush valve pushbutton. Panel is secured to the frame with four 1/4"- 20 x 1-1/4" tamper resistant, stainless steel screws. The frame is 16 gage jetcoat steel with a prime coat

For Pricing information on this Product Series contact your local Jay R. Smith Mfg. Co. representative.

FIG. 4788 SERIES - GASKETED ACCESS DOORS

4788 Series doors are suited for new installations and remodeling in masonry, tile, wood and ceiling surfaces and are ideal for clean rooms such as laboratories and operating rooms. The access door and frame are fabricated from 18 gage galvannealed steel with a prime coat white finish. A concealed pivoting rod hinge prevents distortion and is complemented with a screwdriver-operated latch. Finish is a prime coat white.

For Pricing information on this Product Series contact your local Jay R. Smith Mfg. Co. representative.

FIG. 4789 SERIES - MEDIUM SECURITY ACCESS DOORS

4789 Series doors are designed for medium security and are ideally suited for new installations, as well as remodeling for correctional, institutional and educational facilities. The access door and frame are fabricated from 12 gage galvannealed stainless steel with a prime coat white finish. A concealed pivoting rod hinge is complemented with an allen head latch and security pin. Finish is a prime coat white.

For Pricing information on this Product Series contact your local Jay R. Smith Mfg. Co. representative.

†REGULARLY FURNISHED

Door Type	Latch Code	Description
4760, 4762, 4765, 4767, 4770, 4771, 4772, 4774, 4777, 4778, 4783, 4784 4788	**-AKL**	Allen Key Lock
4782	**-AS**	Automatic Spring Closure
4760, 4762, 4765, 4767, 4768, 4770, 4771, 4772, 4773, 4774, 4777, 4783, 4788, 4789	**-CL**	Cylinder Lock
4760, 4781	**-MAS**	Masonry Anchor Straps
4773, 4781	**-MLP**	Mortise Lock Prep
4760, 4777, 4778, 4784	**-TH**	“T” Handle

AKL Option Chart - Number of Locks Required per Door

Door Size	# AKL
6x6	1
8x8	1
8x12	1
10x10	1
12x12	1
12x16	1
12x18	1
12x24	2
14x14	1
15x15	1
16x16	1
16x20	2
16x24	2
18x18	3
18x24	3
18x36	3

Door Size	# AKL
20x20	3
20x24	3
20x30	5
22x22	3
22x30	5
24x24	3
24x30	5
24x36	5
24x48	5
30x30	5
32x32	5
36x36	5
36x48	5
14x20	3
14x24	3

NOTE: These sizes are for any model that offers the -AKL option. Multiply the option price times the number of locks required and add to the net price of the door.

†REGULARLY FURNISHED

FIG. 4810 FLOOR ACCESS COVER W/ROUND FRAME AND SCORIATED COVER

FUNCTION: Used in concrete floors and/or surfaced areas. Scoriated covers are used where floors are subject to ordinary foot traffic and normal loadings. The secured cover should be used wherever vandalism can be a problem.

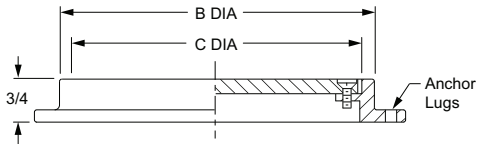

Fig. 4810

OPTIONS: **ADD**

-U Vandal Proof Screws **123.00**
Cover Drilled in Center and furnished with 1/4"-20 x 2 1/2" Long Screw **191.00**
Smooth Top for Flush-Type Cover ..... **See Fig. 4725**

4810	COVER MATERIAL	C - COVER DIA:	04 "	5 1/2"	06"	06"	08"	10"
		PLUG SIZE	2"	3"	4"	5"	6"	8"
		B - DIA:	4 1/2"	5 3/4"	6 1/2"	6 1/2"	8 1/2"	10 1/2"
	†Nickel Bronze (-NB)		448.00	448.00	448.00	448.00	783.00	1,135.00
	Polished Bronze (-PB)		403.00	403.00	403.00	403.00	726.00	996.00
		APPROX WT. LBS.	2	3	5	5	9	13

REGULARLY FURNISHED: Secured Scoriated Nickel Bronze Cover and Frame with Anchor Lugs.

FIG. 4880, 4881 ROUND FLANGED HOUSING W/HEAVY DUTY CAST IRON COVER

FUNCTION: Used to cover cleanouts, valves, cocks, etc. High anchor flange permits use in areas surfaced with concrete or other poured materials. Low anchor flange is used with a ring of concrete poured below the surface for non-surfaced areas and areas surfaced with asphalt paving. Housing is completely free of piping so that no loading is transmitted to the pipe.

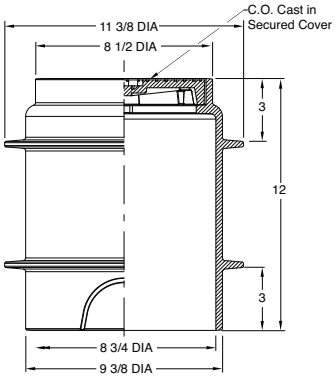

Fig. 4880

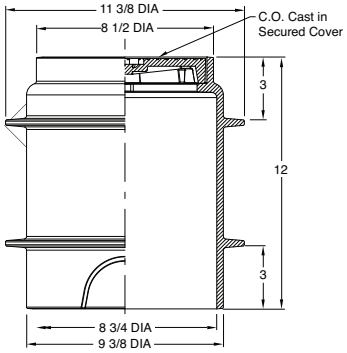

Fig. 4881

OPTIONS: **ADD**

-U Vandal Proof Screw **123.00**
Cover Cast W/"Gas Shut Off" (-GSO) or "Water Shut Off" (-WSO)..... **246.00**

For 2"-5"	
4880	1,788.00
4880DI	2,377.00
4880NB	2,575.00
4880PB	2,501.00
For 6"-8"	
4881	2,105.00
4881DI	2,893.00
4881NB	3,331.00
4881PB	3,255.00

REGULARLY FURNISHED: Duco Cast Iron Double Flanged Body with Heavy Duty Secured Scoriated Cast Iron Cover with Lifting Device.

FIG. 4890 ROUND DECK PLUG W/THREADED SPANNER WRENCH COVER

FUNCTION: Used as floor cleanout for drainage lines. The threaded machine fit cover is watertight and requires a spanner wrench for removal.

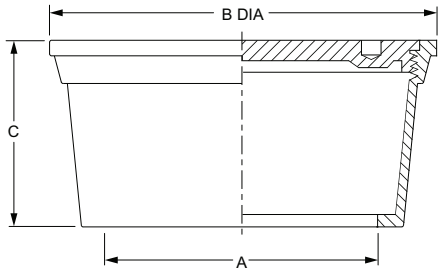

Fig. 4890

OPTIONS: **ADD**

-SH Securing Holes (Fig. DX4890) **156.00**
-SW Spanner Wrench..... **177.00**

		A - PLUG SIZE	02"	03"	04"	05"	06"	08"
		B - DIA:	4"	4 3/4"	6"	8"	8 3/4"	10 3/4"
		C	2"	3"	3"	3 1/2"	3 1/2"	3 1/2"
4890	COVER MATERIAL							
	†Nickel Bronze (-NB)		626.00	877.00	971.00	1,537.00	1,671.00	3,255.00
	Polished Bronze (-PB)		576.00	778.00	873.00	1,411.00	1,548.00	2,613.00
		APPROX WT. LBS.	3	7	9	10	12	18
DX4890	†Nickel Bronze (-NB)		1,954.00	2,202.00	2,297.00	-	-	-
	Polished Bronze (-PB)		1,904.00	2,103.00	2,199.00	-	-	-
		APPROX WT. LBS.	8	13	17	-	-	-

REGULARLY FURNISHED: All Nickel Bronze with Polished Scoriated Cover.

†REGULARLY FURNISHED

FIG. 4910, 4915 SQUARE OR RECTANGULAR FRAMES W/SECURED COVER

FUNCTION: Used in concrete floors and surfaced areas subject to pedestrian or similar traffic to provide access to cleanouts, valves, controls or equipment. Particularly suitable for multiple installation of valves such as radiant heating balancing valves. Framing lugs are provided to attach to wood forms, arranged so form can be removed after concrete sets. Perforated flange keys into concrete, providing permanent anchor. Hinged covers are recommended for frequently used type of installations.

OPTIONS: **ADD**

-U Vandal Proof Screws **123.00**
Cover Cast with words "Cleanout" (-CO), "Gas Shut Off" (-GSO) or "Water Shutoff" (WSO) **246.00**

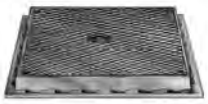

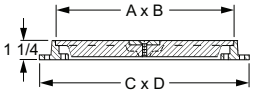

Fig. 4910

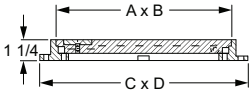

Fig. 4915

	A X B COVER SIZE	C X D	†ALL ROUGH ALUMINUM	POLISHED ALUMINUM (-PT)	STEEL DIAMOND PLATE (-HD)	APPROX. WEIGHT LBS
4910 SECURED COVER	06 x 06"	08 x 08"	**448.00**	**611.00**	**917.00**	3
	06 x 12"	08 x 14"	**580.00**	**739.00**	**1,134.00**	5
	09 x 09"	11 x 11"	**794.00**	**986.00**	**1,301.00**	6
	12 x 12"	14 x 14"	**968.00**	**1,121.00**	**2,059.00**	8
	15 x 15"	17 x 17"	**1,741.00**	**2,010.00**	**3,409.00**	11
	24 x 24"	26 x 26"	**3,984.00**	**4,472.00**	**7,043.00**	24
4915 HINGED SECURED COVER	06 x 06"	08 x 08"	**687.00**	**842.00**	-	3
	09 x 09"	11 x 11"	**1,063.00**	**1,220.00**	-	6
	12 x 12"	14 x 14"	**1,229.00**	**1,396.00**	-	8
	15 x 15"	17 x 17"	**2,128.00**	**2,389.00**	-	-

REGULARLY FURNISHED: Plain Aluminum Frame and Secured Scoriated Cover with Lifting Device.

FIG. 4930, 4940 FLOOR ACCESS COVER W/SQUARE FRAME AND SECURED SCORIATED COVER

FUNCTION: Used in concrete floors and surfaced areas subject to normal foot traffic, to provide access to cleanouts, valves, controls or equipment. Hinged covers are recommended for frequently used types of installations.

OPTIONS: **ADD**

-ST Smooth Top ..... **N/C**
-U Vandal Proof Screws (Fig. 4930 Only) **123.00**

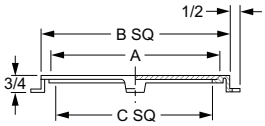

Fig. 4930

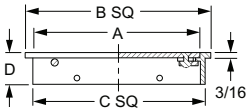

Fig. 4940

4930 SECURED COVER	A - COVER SIZE SQ:	06 x 06"	08 x 08"	10 x 10"
	B - SQ:	7"	9"	11"
	C - SQ:	5 1/2"	7 1/2"	9 1/2"
COVER MATERIAL	†Nickel Bronze (-NB)	777.00	1,140.00	1,229.00
	Polished Bronze (-PB)	674.00	993.00	1,066.00
4940 HINGED SECURED COVER	B - SQ:	-	9"	12"
	C - SQ:	-	8 3/4"	10 1/2"
	D	-	1 1/2"	3 3/4"
COVER MATERIAL	†Nickel Bronze (-NB)	-	1,064.00	1,504.00
	Polished Bronze (-PB)	-	917.00	1,341.00
	APPROX WT. LBS.	14	18	26

REGULARLY FURNISHED: Square Nickel Bronze Frame and Secured Scoriated Cover or Hinged Scoriated Cover with Locking Device.

†REGULARLY FURNISHED

WATER HAMMER ARRESTERS

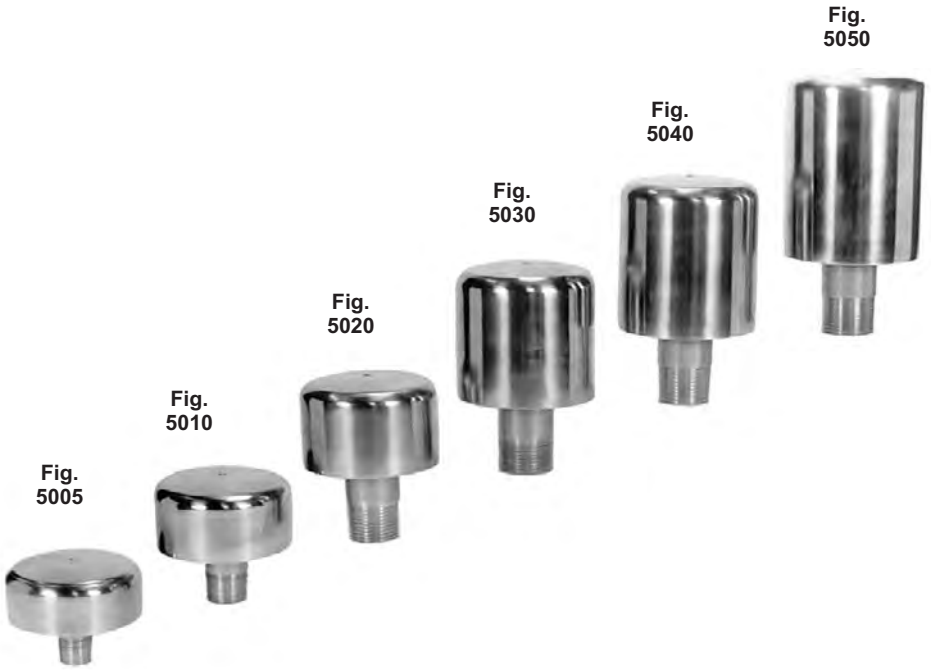

Fig. 5060

5000 SERIES

After identifying the proper size required to meet the engineering specification, place order as shown below:

Example:

5005

Figure No.

DESIGN · CONSTRUCTION · OPERATION

Built to last without mechanical failure or material deterioration, the HYDROTROL unit is constructed entirely of stainless steel.

HYDROTROL uses heavy duty balanced expansion bellows to internally absorb the hydrostatic shock pressure occurring in water lines. These bellows are both pneumatically and hydraulically controlled in a pressurized expansion chamber so that they never come into metal to metal contact with other parts of the unit, and cannot be subjected to excessive stresses or strains which might cause metal fatigue and bellows failure.

Stainless steel construction combined with unique engineered design make HYDROTROL -

- •Compact in size
- •Big in performance
- •Maximum capacity
- •Light-weight - needs no support straps
- •Requires no service or maintenance
- •Extremely durable - May be installed in concealed areas

Bellows in normal position

- Pressurized compression chamber charged and factory sealed. Controls bellows expansion under normal water-line pressure so that full expansion capacity is available to control shock.
- Hydraulic Fluid–Pure non toxic mineral oil surrounds bellows, holding bellows in uniform alignment.
- Welded Nesting–Type Expansion Bellows
- In-Line Design–Direct action type bellows respond instantly to control shock pressure.
- Threaded Nipple Connection–Screws directly into tee.

With HYDROTROL'S in-line design, expansion bellows are an integral part of the waterline, so that they respond instantaneously in absorbing and controlling hydrostatic shock.

A pressurized compression chamber provides a pneumatic cushion that governs the bellows' expansion under normal waterline pressure, so that the full bellows expansion capacity is available for controlling hydrostatic shock.

The bellows are of balanced design and construction with heavier and stronger convolutions positioned in the bellows assembly to insure each convolution expanding evenly and equally, thereby providing the maximum surface area for absorbing and dissipating the shock pressure into the pneumatic cushion.

Unit absorbing shock

- As shock occurs, bellows expand, creating a pneumatic pressure cushion which absorbs and controls shock.
- Hydraulic fluid flows in between nesting type bellows, holding bellows in uniform alignment during expansion and controlling rate of contraction after shock has been dissipated.
- Bellows in expanded position due to the hydrostatic shock in the system.

As hydrostatic shock occurs, these pressures cause the bellows to expand into the pneumatic cushion of the compression chamber. This expanding movement of the bellows provides the displacement required to absorb and control the shock pressure generated in the line. The force of the shock expanding the bellows creates a self-energizing pneumatic pressure, which prevents the bellows from over-expanding and coming into contact with the top of the compression chamber. This same action forces the hydraulic fluid (pure mineral oil) between each convolution of the bellows and the sides of the compression chamber, creating a hydraulic pressure cushion which holds the bellows in uniform alignment during expansion and controls the rate of contraction after the shock force has been dissipated.

The combined cushioning effect of both the pneumatic and hydraulic pressures governs the bellows action, so that shock waves do not bounce back into the piping system and acts to quickly stabilize the water and piping system.

SIZING AND PLACEMENT OF HYDROTROLS

SIMPLIFIED SIZING METHOD

The selection and specification for the correct size Hydrotrol for each piping run may be easily accomplished by the following procedure which incorporates length of piping run, water pressure and other pertinent data into the Sizing Chart.

The Hydrotrol Sizing Chart shows the number of fixture units that may be accommodated by each size Hydrotrol. The U.S. Bureau of Standards "Fixture Unit Rating Table" designates the fixture unit rating for each plumbing fixture when installed in public or private buildings.

Referring to the "Fixture Unit Rating Table", determine the fixture unit rating of each plumbing fixture on the line. Add the total number of fixture units on the line, and use this figure to select and specify the size Hydrotrol required as indicated on the Hydrotrol Sizing Chart.

PLACEMENT OF HYDROTROLS

EXAMPLE:

The drawing shows plumbing fixtures installed on a typical piping layout. The figures to the right of each fixture run are the total fixture units for the run based on the fixture unit rating table. The total number of fixture units for each plumbing fixture on the line has been added and is shown for both hot and cold water lines. The total number of fixture units for each run determines the size of Hydrotrol required. If the fixture unit total ends up in a 1/2 number, round up to the next larger whole number.

The additional Hydrotrols shown on batteries of over 20'(6.096M) in length are the same size as those specified in the chart ... shown for each floor.

The following general rules are applicable to proper placement of "Hydrotrols". The locations shown in the installation layout are recommended to give the maximum in water hammer arresting effectiveness:

1. Single fixtures or appliances --Locate Hydrotrol just before fixture of valve.
2. Battery of fixtures -- Length of battery 20'(6.096M) or less. Locate Hydrotrol between the last and next to last fixtures. (See 5th Floor Examples.)
3. For a battery of fixtures having a branch line over 20 (6.096M) ft. in length, two Hydrotrols should be installed. The two Hydrotrols selected should have combined fixture unit rating equal to or greater than the total fixture unit demand of the plumbing fixtures on the entire branch line. Locate one Hydrotrol betweeen the last and next-to-the-last fixture on the branch line. The other Hydrotrol to be located at a point equal to half the length of the branch line. (See first floor example).
4. On hot water branch lines over 20 (6.096M) ft. in length, where plumbing fixtures are installed on a portion of the line, the second Hydrotrol should be located at a point half the distance of the plumbing fixtures installed. (See second and third floor examples).
5. For special or unique battery arrangements or piping layouts, please consult the Smith Engineering Dept. for the proper specification on sizing and placement.

FIXTURE UNIT RATING TABLE GENERAL BUILDING AREAS

FIXTURE	TYPE OF SUPPLY CONTROL	WEIGHT IN FIXTURE - UNITS PUBLIC C.W.	PUBLIC H.W.	PRIVATE C.W.	PRIVATE H.W.
Water Closet	Flush Valve - 1.6 GPF	8	-	5	-
Water Closet	Flush Tank - 1.6 GPF	5	-	3	-
Pedestal Urinal	Flush Valve - 1.06 GPF	4	-	-	-
Stall or Wall Urinal	Flush Valve - 1.06 GPF	4	-	-	-
Stall or Wall Urinal	Flush Tank	2	-	-	-
Lavatory	Faucet	1 1/2	1 1/2	1	1
Bathtub	Faucet	2	3	1 1/2	1 1/2
Shower head	Mixing Valve	2	3	1	2
Bathroom Group	Flush Valve Closet	-	-	8	3
Bathroom Group	Flush Tank Closet	-	-	6	3
Separate Shower	Mixing Valve	-	-	1	2
Service Sink	Faucet	3	3	-	-
Laundry Tubs (1-3)	Faucet	-	-	3	3
Combination Fixture	Faucet	-	-	3	3

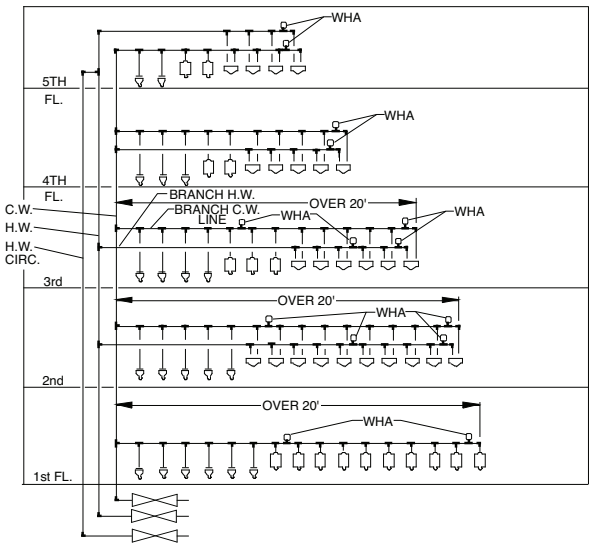

FOR APPLICATIONS NOT COVERED BY THE FIXTURE UNIT RATING TABLE -

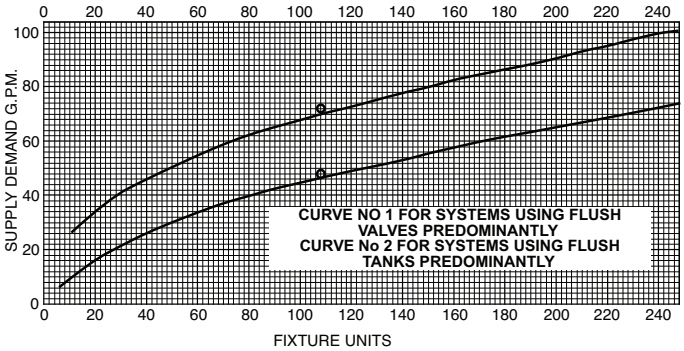

The Graph Chart is based on the U.S. Bureau of Standards Sizing Table and may be used to determine the fixture unit rating based on GPM supplied to the fixture in question.

HYDROTROL SIZING CHART

P.D.I. SYMBOLS	A	B	C	D	E	F
HYDROTROL	5005	5010	5020	5030	5040	5050
Fixture Unit Rating	1-11	12-32	33-60	61-113	114-154	155-330

NOTE: When Water Pressure in line exceeds 65 psi, specify the next larger Hydrotrol.

ALTERNATE SIZING METHOD

The simplified sizing method covers 90% of most applications encountered. Where fixture unit ratings are not available or where water is piped to remote items of equipment, the following method of Hydrotrol selection should be used:

INFORMATION REQUIRED TO USE CHART:
1. LENGTH OF PIPE RUN.
2. PIPE SIZE.
3. WATER PRESSURE.

Length of pipe run should be determined from the point of valve closure to a point of relief, such as a large pipe riser twice the size of the branch line, main line or water tank.

HYDROTROL SELECTION CHART

LENGTH OF PIPE	NOMINAL PIPE SIZE 1/2"(13)	3/4"(19)	1"(25)	1 1/4"(32)	1 1/2"(38)	2"(51)
25	5005	5005	5010	5020	5030	5040
50	5005	5010	5020	5030	5040	5050
75	5010	5020	5030	1-5005 1-5040	5050	1-5040 1-5050
100	5020	5030	5040	5050	1-5020 1-5050	2-5050
125	5020	5030	5050	1-5005 1-5050	1-5040 1-5050	1-5040 2-5050
150	5030	5040	5050	1-5030 1-5050	2-5050	3-5050

NOTE: Data in table is based on a maximum operating water pressure of 65 psi, and an average velocity between 5 to 10 feet per second. If operating pressures are over 65 psi, use next larger Hydrotrol unit.

NOTE: This Fixture Unit Rating Table is established in accordance with the Plumbing & Drainage Institute WH-201 Standard titled Water Hammer Arresters. The local code authority takes precedence over this Fixture Unit Rating Table which shall be appraised for exactness prior to using Water Closet and Urinal fixture unit values are based on 1.6 GPF for water closets and 1.06 GPF for pedestal/stall/wall urinals.

FIG. 5005 TO 5060 HYDROTROL ENGINEERED WATER HAMMER ARRESTERS

FUNCTION: Quick closing electrical, pneumatic, spring loaded valves or devices, and the quick hand closure of fixture trim can cause destructive "water hammer". Engineered water hammer arresters ("Hydrotrols") employ a permanently sealed cushion of air or gas which absorbs the energy of water hammer and reduces pressure rise in the piping system to a safe level. Hydrotrol units, correctly sized and placed at specific locations in the water piping system will control the destructive shock of water hammer.

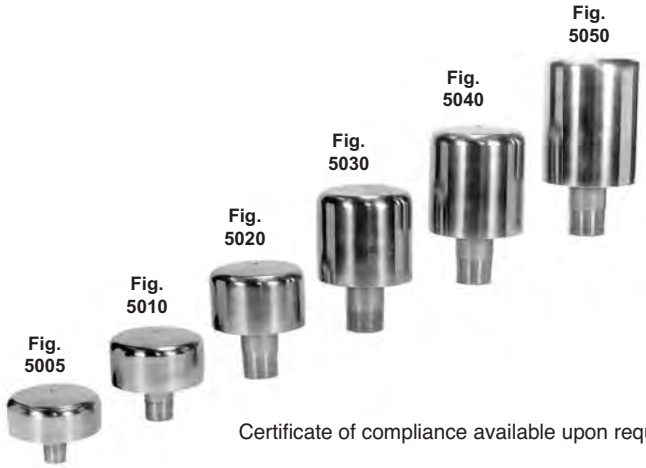

Certificate of compliance available upon request.

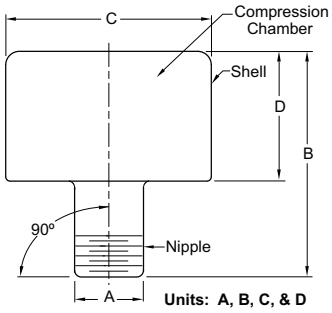

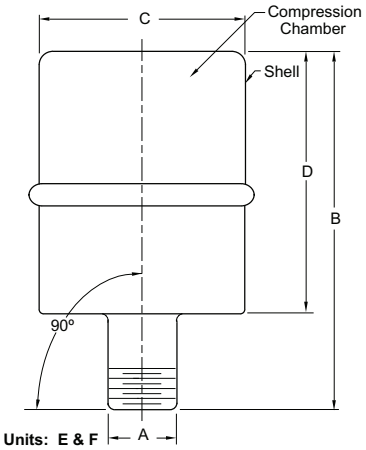

Fig. 5060 - "HY-DUTY" HYDROTROL

Hydrotrols Fig. 5005 to 5050 inclusive have been tested and certified in accordance with the Plumbing and Drainage Institute "Standard P.D.I. WH-201"

Hydrotrols are pre-charged and permanently sealed at the factory. All hydrotrols are constructed entirely of stainless steel.

Fig. 5060

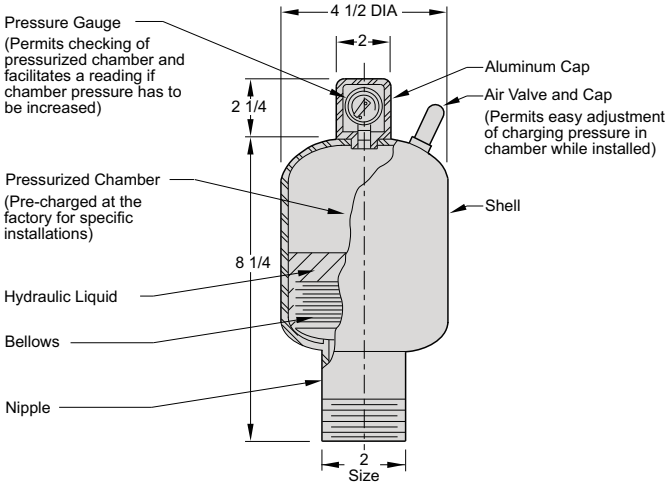

FIG. NO.	PDI SIZE	FIXTURE UNIT CAPACITY	A PIPE SIZE	B HEIGHT	C DIA.	D	STAINLESS STEEL	APPROX WEIGHT LBS
5005	A	1-11	3/4" NPT	2 5/8"	3 1/4"	1 7/16"	**705.00**	1
5010	B	12-32	1" NPT	2 7/8"	3 1/4"	1 3/4"	**1,440.00**	2
5020	C	33-60	1" NPT	3 1/2"	3 1/4"	2 1/4"	**2,149.00**	3
5030	D	61-133	1" NPT	4 1/2"	3 1/4"	3 1/4"	**5,390.00**	3
5040	E	115-154	1" NPT	5 1/2"	3 1/4"	4 1/8"	**6,084.00**	4
5050	F	155-330	1" NPT	6 5/8"	3 1/4"	5 1/4"	**7,477.00**	4
5060	—	—	2" NPT	10 1/2"	4 1/2"	—	**12,001.00**	8

RECOMMENDED SPECIFICATION FOR HYDROSTATIC SHOCK CONTROL

Smith series 5000 "Hydrotrol" all stainless steel shock absorbers shall be installed at all solenoid, remote operated or quick closing valves and at each plumbing fixture or battery of plumbing fixtures. Install on both hot and cold water branch lines in an upright position as close as possible to the valve or valves being served.Sizes and locations as indicated on drawings.

The "Hy-Duty" HYDROTROL has been specially designed to absorb and control the extreme hydrostatic shock pressures that occur in applications such as commercial and institutional laundries, bus and truck washing stations, pumping systems and other large piping systems. Because of the special nature of this unit, all requests for sizing should be sent to the Smith Engineering Dept. for review. To enable the company to properly size units for specific jobs, the following information must be furnished.

1. Length of piping run from main to location of discharge valves for equipment.
2. Size of branch pipe and main.
3. Velocity (flow rate) through the branch and main.
4. Water pressure - both static and flowing.
5. Types of equipment served - name, number, flow rate.
6. Sketch or layout of the complete piping system related to the equipment to be protected. This is desirable so that a complete survey of the installation can be made.

†REGULARLY FURNISHED

HYDROTROL JR.

FIG. 5205-5250 PISTON TYPE WATER HAMMER ARRESTERS - LEAD FREE

Maximum working pressure - Designed to keep residential, commercial, and industrial water lines @ 350 p.s.i. maximum working pressure during pressure surges following quick valve closure. Working TEMPERATURE RANGE - From 33 degrees to 250 degrees F.

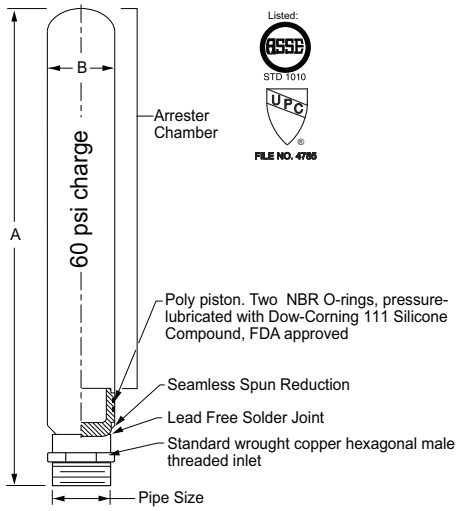

THREADED CONNECTION

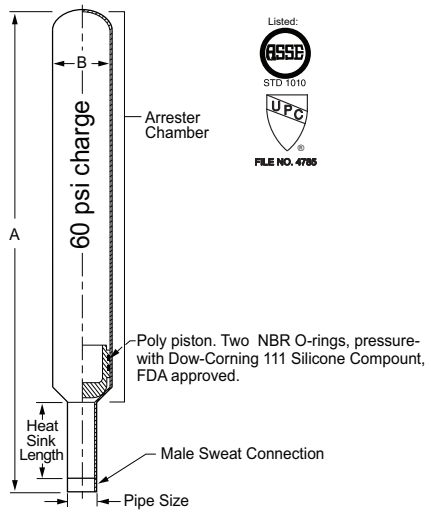

MALE SWEAT CONNECTION (-SC)

INSTALLATION

The piston unit can be installed in new construction or renovation/remodel by threading into properly sized female I.P.S. fitting (wrench or hex).
It can be installed at any angle to accommodate structural limitations, and should be placed as close to the shut-off valve as possible, one on each hot and cold line. The piston unit is seamless, factory charged and is maintenance free and does not require access panels. It cannot be charged in the field.

TYPICAL INSTALLATIONS

- Properly sized and placed (see tables below) the piston unit can be set in a multiple fixture branch for commercial/institutional/industrial/residential applications.
- As a tee configuration with stub outs in walls behind sinks, lavatories, and water closets.
- MIP Threaded model - Threaded into female I.P.S. connections in tub and shower valves.
- In supply lines of clothes washers and dishwashers. (AA not recommended for theses applications)
- Into cold inlet and hot outlet of water heater for general protection.

NOTE: For additional Hydrotrol sizing and placement data go to our web site at www.jrsmith.com or contact your local Jay R. Smith Representative.

NOTE: Systems exceeding 60 PSI (414kPa) shall be installed with a pressure reducing valve upstream of the unit per ASSE Standard #1010.

NOTE: The wetted surface of the product contacted by consumable water contributes less than one quarter of one percent of lead by weight.

PISTON UNITS Comply with the following:
ASSE/ANSI 1010 Water Hammer Arrester

IMPORTANT

INSTALL USING WRENCH ON HEX ABOVE THREADS
PROTECT PRESSURE CHAMBER FROM DENTING.

FIG. NO.	SIZING SYMBOL	FIXTURE UNIT CAPACITY	A PIPE SIZE	AIR CHARGE	THREADED CONN.	DIMENSIONS A	DIMENSIONS B DIA	SWEAT CONN. (-SC)	DIMENSIONS A	DIMENSIONS B DIA	APPROX WEIGHT LBS
***5201**	AA	1 to 3	1/2 IPS	60 psig	**175.00**	5.56	.875"	**175.00**	5.62	.875	.5
5205	A	4 to 11	1/2 IPS	60 psig	**224.00**	6.875	1.125	**224.00**	6.56	1.125	.5
5210	B	12 to 32	3/4 IPS	60 psig	**433.00**	8.69	1.38	**433.00**	10.81	1.38	.5
5220	C	33 to 60	1 IPS	60 psig	**683.00**	12.00	1.38	**683.00**	14.03	1.38	1
5230	D	61 to 113	1 1/4 IPS	60 psig	**1,441.00**	12.00	2.13	**1,441.00**	13.53	2.13	1
5240	E	114 to 154	1 1/2 IPS	60 psig	**1,788.00**	14.56	2.13	**1,788.00**	16.84	2.13	1
5250	F	155 to 330	2 IPS	60 psig	**2,128.00**	16.38	2.13	**2,128.00**	14.122	2.63	2

*For use in residential applications only.

FIXTURE	TYPE OF SUPPLY CONTROL	WEIGHT IN FIXTURE UNITS PUBLIC TOTAL	PUBLIC C.W.	PUBLIC H.W.	PRIVATE TOTAL	PRIVATE C.W.	PRIVATE H.W.
WATER CLOSET	FLUSH VALVE	10	10	-	6	6	-
WATER CLOSET	FLUSH TANK	5	5	-	3	3	-
PEDESTAL URINAL	FLUSH VALVE	10	10	-	-	-	-
STALL OR WALL URINAL	FLUSH VALVE	5	5	-	-	-	-
STALL OR WALL URINAL	FLUSH TANK	3	3	-	-	-	-
LAVATORY	FAUCET	2	1 1/2	1 1/2	1	1	1
BATHTUB	FAUCET	4	2	3	2	1 1/2	1 1/2
SHOWER HEAD	MIXING VALVE	4	2	3	2	1	2
BATHROOM GROUP	FLUSH VALVE CLOSET	-	-	-	8	8	3
BATHROOM GROUP	FLUSH TANK CLOSET	-	-	-	6	6	3
SEPARATE SHOWER	MIXING VALVE	-	-	-	2	1	2
SERVICE SINK	FAUCET	3	3	3	-	-	-
LAUNDRY TUBS (1-3)	FAUCET	-	-	-	3	3	3
COMBINATION FIXTURE	FAUCET	-	-	-	3	3	3

ASSE/PDI WATER HAMMER ARRESTER SIZING CHART

FOR FLOW PRESSURE UP TO 65 P.S.I.G						
LENGTH OF PIPE	NOMINAL PIPE DIAMETER 1/2"	3/4"	1"	1 1/4"	1 1/2"	2"
25'	A	A	B	C	D	E
50'	A	B	C	D	E	F
75'	B	C	D	AE	F	EF
100'	C	D	E	F	CF	FF
125'	C	D	F	AF	EF	EFF
150'	D	E	F	DF	FF	FFF

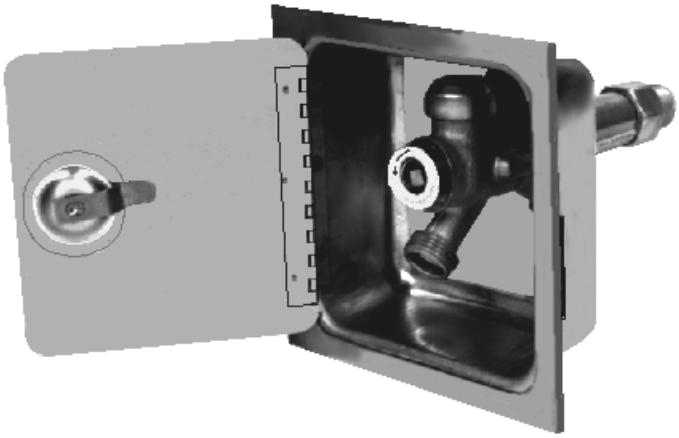

ORDERING GUIDELINES

5500-5900 SERIES

After identifying the proper options required to meet the engineering specification, place order as shown below:

Examples:

5509QT (-10-WC)

- Figure No. — 5509QT
- Wall Thickness — 10
- Adjustable Wall Clamp — WC

5609QT (-08-WC-HC1)

- Figure No. — 5609QT
- Wall Thickness — 08
- Adjustable Wall Clamp — WC
- 1" Hose Connection — HC1

*All variation suffixes are to be shown in parenthesis.

TECHNICAL DATA

1/4 TURN NON-FREEZE WALL HYDRANTS Box-type 1/4 turn non-freeze wall hydrants are recommended for all finished exterior walls. Smith regularly furnishes this type wall hydrant with a stainless steel box. Figures 5560QT Series has a bronze box with a high polished chrome plated face. Stainless Steel and chrome plate finish will not "oxide stain" finished exterior walls. All Smith boxes are face-of-wall design. The box flange covers the rough opening and fits flush against exterior wall surface. The hinged locking cover conceals the hose nozzle and all operating parts. Advantages of flush recessed box type non-freeze hydrants are:

- **No protruding hose connection, operating mechanism or key.**
- **Cannot be used by unauthorized persons.**
- **Protected against vandalism and tampering.**
- **Flush design offers the ultimate in appearance in any finished exterior wall.**

Projecting hose connection type 1/4 turn non-freeze hydrants (5600 Series) are recommended in finished exterior walls where protruding parts will not present a problem and where vandalism or tampering protection is not a necessity. This type is recommended with a nickel plated face to prevent staining of finished walls. Usually, the exposed type hydrant is installed where shrubs or other plantings conceal the hydrant and where property is protected by fencing or other security measures.

HOSE CONNECTIONS Smith 1/4 Turn Non-Freeze Wall Hydrants are regularly furnished with a 3/4" - 11 1/2 NH garden hose connection. This connection is regularly furnished for both 3/4" and 1" inlet sizes. A 1" 11 1/2 NPSH water hose connection can be furnished (-HC1) when specified.

1/4 TURN NON-FREEZE SERIES With exception of short as possible (-SAP) types, series 5500 and 5600 should always be used where outside temperatures drop below freezing. In mild climates or at indoor locations where freezing temperatures are not encountered, the 5509QT-SAP and 5519-SAP type mild climate box hydrants are recommended. These series are regularly furnished with a stainless steel box to protect the finished wall from staining.

The 5509QT and 5609QT series non-freeze wall hydrants are regularly furnished with an integral atmospheric vacuum breaker. The 5519 and 5619 series non-freeze wall hydrants are regularly furnished with an integral vacuum breaker dual check valve. The 5560QT and 5561QT series are regularly furnished without a vacuum breaker. These are available with an add-on type vacuum breaker as variation (-H) when specified.

Back siphonage is prevented when a negative pressure or vacuum occurs in the hydrant by automatically closing the vacuum breaker and opening air ports, thus breaking the vacuum within the hydrant.

REPLACEMENT PARTS LIST

The following diagrams and replacement parts list can be used in figure numbers below. All Smith hydrant submittal drawings show a complete parts list on reverse side of drawing.

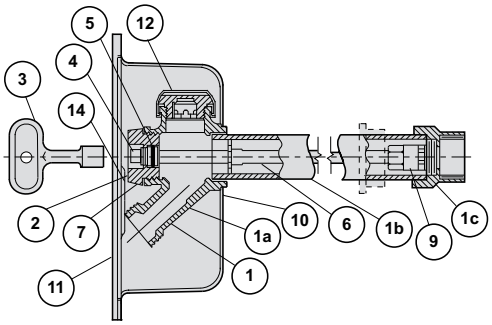

Fig. 5509QT
Fig. 5609QT

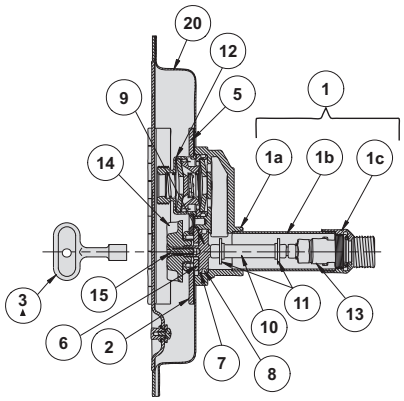

Fig. 5519
Fig. 5619

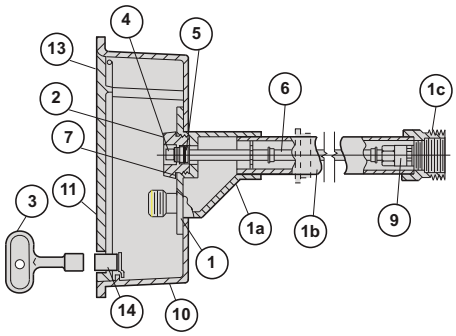

Fig. 5560QT
Fig. 5561QT

REPLACEMENT PARTS LIST WITH USE BY FIGURE NUMBER
SPECIFY FIGURE NUMBER WHEN ORDERING

PART NO.	DESCRIPTION	FIGURE NUMBER 5509QT	5560QT	5561QT	5609QT	PART NO.	DESCRIPTION	FIGURE NUMBER 5519	5619
1	HEAD/CASING ASSEMBLY					1	HEAD/CASING ASSEMBLY		
2	FACE NUT					2	WALL PLATE ASSEMBLY		
3	KEY					3	KEY		
4	ACTUATOR SHAFT					5	WALL PLATE GASKET		
5	ACTUATOR “O” RING					6	STATIONARY OPERATOR PIECE		
6	OPERATING ROD					7	MOVEABLE OPERATOR PIECE		
7	FACE NUT WASHER					8	MOVEABLE OPERATOR O-RING		
8	VACUUM BREAKER ASSY					9	DRAIN HOLE SEAL (2)		
10	BOX					10	OPERATOR ROD		
11	COVER					11	OPERATOR ROD GUIDES (2)		
12	BACKER PLATE					12	VB/DUAL CHECK VALVE ASSY		
13	HINGE PINS (2)					13	ACTUATOR CARTRIDGE		
14	LOCKING DEVICE					20	BOX		

NOTE: HYDRANT PART NUMBERS HAVE CHANGED OVER THE YEARS.
CONSULT FACTORY BEFORE ORDERING

HYDRANTS TECHNICAL DATA AND OPTIONAL INLET CONNECTIONS

NON-FREEZE GROUND AND POST HYDRANTS are supplied with a special valve housing which prevents freezing of hydrant during non-use periods. The valve housing must be installed below the frost line (minimum depth of bury) which prevails for the area of installation. The valve housing has a drain hole which drains the casing of hydrant when hydrant is shut off. In effect, there is no water in the casing during non-use periods. Normally, water from the drain hole is allowed to drain into the ground. The valve housing should be set in a bed of gravel so that water drained from casing can leach into ground.

Some locations which require Non-Freeze Ground Hydrants cannot tolerate water draining from the drain hole. Examples are parking garages, plazas, and roof decks used for recreational purposes. Often in this type of application the valve housing will protrude into a finished area which is not subject to freezing temperatures. To eliminate the problem of water drainage in this type of installation, Smith can supply a tapped drain hole in the hydrant box and a tapped drain hole in the valve housing. By using the tapped drain hole, water accumulation in the box, and the normal drain down water from the valve housing drain hole can be piped to a suitable drain.

SPECIFYING WALL SIZE Primary function of both 5500 and 5600 Series 1/4 Turn Non-Freeze Wall Hydrants is to supply water to the building exterior without danger of freezing, regardless of how low the outside temperature falls. For this reason, the hydrant must be specified with a casing long enough to locate the valve seat inside the heated building. (Fig. 1) shows how to determine proper size required.

NOTE: All wall hydrant series are available in short as possible types for mild climate installation. Specify series number -SAP.

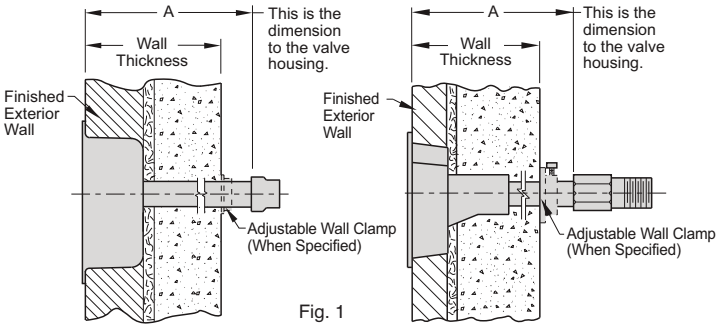

Fig. 1

NOTE: When ordering, specify Figure Number and "A" dimension. "A" should always be greater than wall thickness for non-freeze installations. When a wall clamp is specified, add 1 1/4" to the wall thickness to arrive at a minimum required "A." The "A" specified should be the next larger, even number; such as 06", 08", 10", etc. Wall hydrants are furnished in lengths of 2" increments.

Often, non-freeze wall hydrants must be concealed entirely within the wall. When so required, an overall dimension can be specified. This dimension is measured from face of hydrant box to extreme end of inlet connection. When the valve seat must be concealed within the wall, extra precautions must be taken to properly insulate the valve seat housing to protect against freezing.

OPTIONAL INLET CONNECTIONS

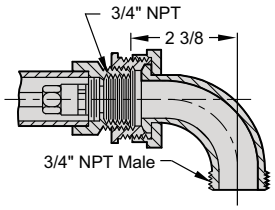

SUFFIX -E
UNION ELBOW - 3/4" NPT

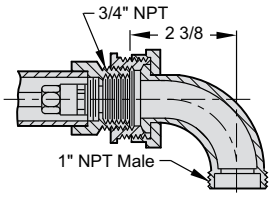

SUFFIX -E1
UNION ELBOW - 1" NPT

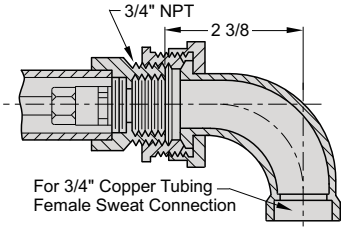

SUFFIX -SE
UNION ELBOW -SWEAT -3/4"

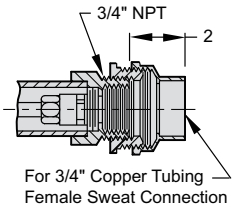

SUFFIX -SS
STRAIGHT SWEAT - 3/4"

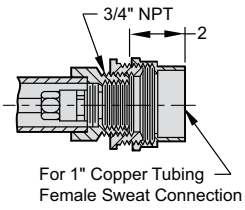

SUFFIX -SS-1
STRAIGHT SWEAT - 1"

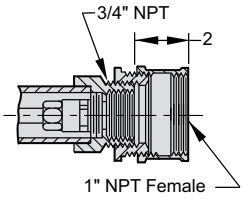

SUFFIX -MF1
STRAIGHT FEMALE - 1"

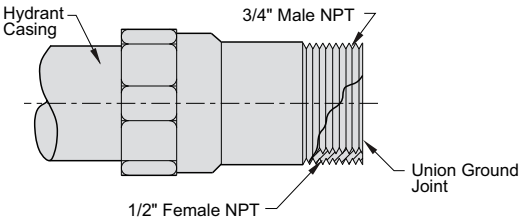

UNIVERSAL INLET CONNECTION

Hydrants are regularly furnished with a unique inlet connection, 3/4" NPT Male thread, 1/2" NPT Female thread, and union ground joint carefully engineered to accommodate inlet connections shown above.

FIG. 5509QT QUARTERHORSE–1/4 TURN SS BOX-TYPE HYDRANT W/INTEGRAL VACUUM BREAKER AND CONCEALED HOSE CONNECTION

FUNCTION: Provides positive non-freeze protection where water is required at the outside of the building and features an integral vacuum breaker. The stainless steel recessed box conceals the nozzle and operating mechanism. The locking cover prevents unauthorized use.

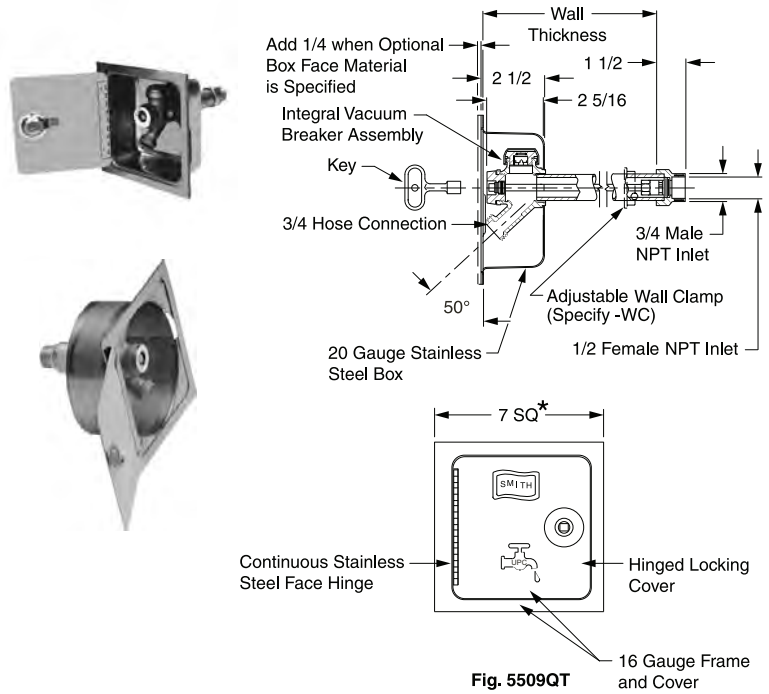

Fig. 5509QT

OPTIONS:		ADD
-CL	Cylinder Lock	240.00
-CP	Chrome Plated Face	390.00
-E	Elbow Inlet	57.00
-E1	1" NPT Elbow Inlet	335.00
-HC1	1" Hose Conn Adaptor	273.00
-IC1**	1" Male NPT Inlet Connection	273.00
-MF1	1" Straight Female Inlet	273.00
-NB	Nickel Bronze Face	356.00
-PB	Polished Bronze Face	78.00
-RB	Rough Bronze Face	78.00
-SE	Sweat Elbow Inlet	57.00
-SE1	1" NPT Sweat Elbow Inlet	335.00
-SS	Straight Sweat Inlet	N/C
-SS1	1" Straight Sweat Inlet	273.00
-SSR	6" Cored Hole Stainless Steel Box (Round)	353.00
-W	"Water" on Cover	N/C
-WC	Adjustable Wall Clamp	N/C

		LIST
5509QTBASS	SS Box w/Hinged Locking Cover	875.00
5509QTBANB	SS Box w/Hinged Locking Cover w/NB Face	1,228.00
5509QTBAPB	SS Box w/Hinged Locking Cover w/PB Face	956.00
5509QTBARB	SS Box w/Hinged Locking Cover w/RB Face	956.00
5509QTBACP	SS Box w/Hinged Locking Cover w/CP Face	1,267.00

For Hydrant Parts Repair Kit, refer to Net Parts Price Guide.

WALL THICKNESS	3/4" INLET	APPROX WEIGHT LBS
-SAP	1,714.00	8
06, 08"	1,985.00	9
10, 12, 14, 16"	2,170.00	10
18, 20, 22, 24"	2,351.00	11

REGULARLY FURNISHED: Bronze Nickel Plated Quarter Turn Self Draining Non-Freeze Hydrant with Hose Connection, Integral Vacuum Breaker, "T" Handle Key, and Stainless Steel Box with Full 180° Cover Opening.

NOTES:

1. *Recommended wall opening 6" x 6". Hydrant shall be in the vertical position only, the connection must be on the bottom.
2. When ordering, specify wall thickness in 2" increments as follows: 06, 08, 10, 12, 14,16,18, 20, 22 or 24. When wall clamp -WC is desired, increase wall thickness dimension by 2".
3. All Jay R. Smith hydrants are manufactured with "NO-LEAD" brazing rings, and USDA approved lubricants.
4. When an Optional Box Face Material is Specified a Concealed Hinge will be Provided, also add 1/4" to Flange Thickness.
5. **FOR IRRIGATION PURPOSES ONLY**.

** Add 3/4" to overall length when specified.

Seepage of a small amount of water may occur from the vacuum breaker upon the initial opening and closing of this hydrant. This is normal operation.

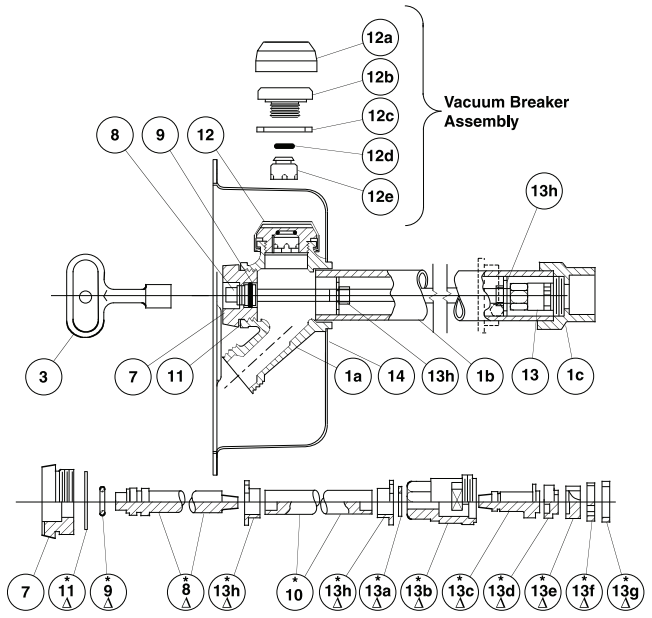

HYDRANT PARTS LIST					
NO.	DESCRIPTION	NO.	DESCRIPTION	NO.	DESCRIPTION
1	Head/Casing Assembly	10	Operator Rod	13a	Retaining Ring
1a	Head	11	Face Nut Washer	13b	Valve Body
1b	Casing	12	Vacuum Breaker Assembly	13c	Valve Actuator
1c	Valve Housing	12a	VB Cap	13d	Nylon Thrust Washer
3	Key	12b	VB Body	13e	Rotating Ceramic Disc
7	Face Nut	12c	VB Washer	13f	Fixed Ceramic Disc
8	Actuator Shaft	12d	VB "O" Ring	13g	Silicon Rubber Seal
9	Actuator "O" Ring	12e	VB Piston	13h	Retainer Guide (2)
		13	Valve Body Assembly	14	Box Assembly S.S.

Δ These Replacement Parts Available in HPRK-7

* All Parts Accessible from Face of Hydrant by Removing Face Nut.

†REGULARLY FURNISHED

FIG. 5515 - GUARDIAN PLUS DUAL CHECK, 1/4 TURN NON-FREEZE HYDRANT WITH AUTOMATIC DRAINING INTEGRAL VACUUM BREAKER, INTEGRAL SERVICE SHUT-OFF VALVE, DUAL CHECK VALVE W/SS BOX

FUNCTION: Provides positive non-freeze protection where water is required at the outside of the building and features an integral vacuum breaker, dual check valve and water service shut-off valve. The stainless steel box conceals the nozzle and operating mechanism. The locking cover prevents unauthorized use.

1/4 Turn of the Key or Wheel Handle Allows Full Flow to be Obtained

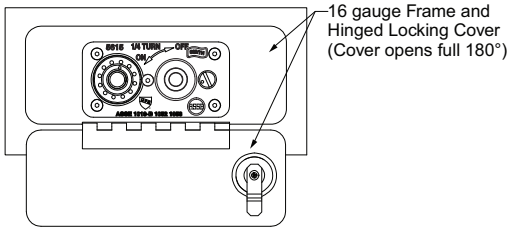

FRONT VIEW with COVER OPEN

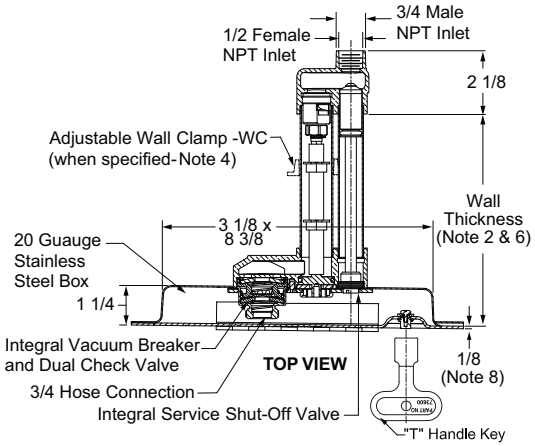

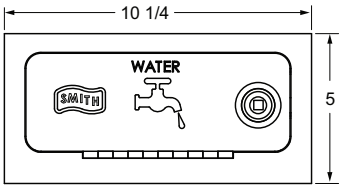

FRONT VIEW

OPTIONS:

		NET ADD
-CL	Cylinder Lock	POA
-CP	Chrome Plated Box Face	POA
-HC1	1" Hose Conn Adaptor	POA
-IC1	1" Male Inlet Connection (Note 5)	POA
-NB	Nickel Bronze Box Face	POA
-PB	Polished Bronze Box Face	POA
-RB	Rough Bronze Box Face	POA
-WC	Adjustable Wall Clamp	POA
-WH	Wheel Handle	POA

NOTES:

1. Recommended wall opening 3 3/16 x 8 1/2.
2. When ordering, specify wall thickness in 1" increments as follows 5,6,7,8,9.....24.
3. All Jay R. Smith hydrants are manufactured with "NO-LEAD" brazing rings, and USDA approved lubricants.
4. When wall clamp -WC is desired, increase wall thickness dimension by 2".
5. Add 3/4" to Overall Length when IC1 is specified.
6. *When specifying (-SAP) the wall thickness shall be 3.
7. The AB1953, California Lead Law, and NSF/ANSI Standard 61-2008 - Drinking Water Systems Components are not applicable to Jay R. Smith hydrants as they do not convey/dispense water for human consumption through drinking or cooking.
8. Add 3/8 when optional box face material is specified.
9. An additional inlet isolation or shut-off valve is usually unneeded with this hydrant, but if required it should be mounted 10 ft or more from the hydrant inlet.
10. Temperature Range: 33.0° F to 140.0° F (.06° C to 60.0° C).
11. This ASSE 1019 device shall not be subjected to more than twelve (12) hours of continuous water pressure.
12. **FOR IRRIGATION PURPOSES ONLY.**

For Hydrant Parts Repair Kit, refer to Net Parts Price Guide.

WALL THICKNESS	3/4" INLET
-SAP*	POA
05 - 08"	POA
09 - 16"	POA
17 - 24"	POA
25 - 31"	POA

Seepage of a small amount of water may occur from the vacuum breaker upon the initial opening and closing of this hydrant. This is normal operation.

Meets ASME A112.21.3M Specifications
Complies w/ ASSE 1019-B,1052 and 1053.
IAPMO Listed- File #2749
PATENT PENDING

REGULARLY FURNISHED: Bronze Quarter Turn Non-Freeze, Automatic Draining Hydrant with Stainless Steel Face, Hose Connection, Integral Vacuum Breaker, Integral Service Shut-Off Valve, Dual Check Valve, "T" Handle Key and Stainless Steel Box with Full 180° Cover Opening.

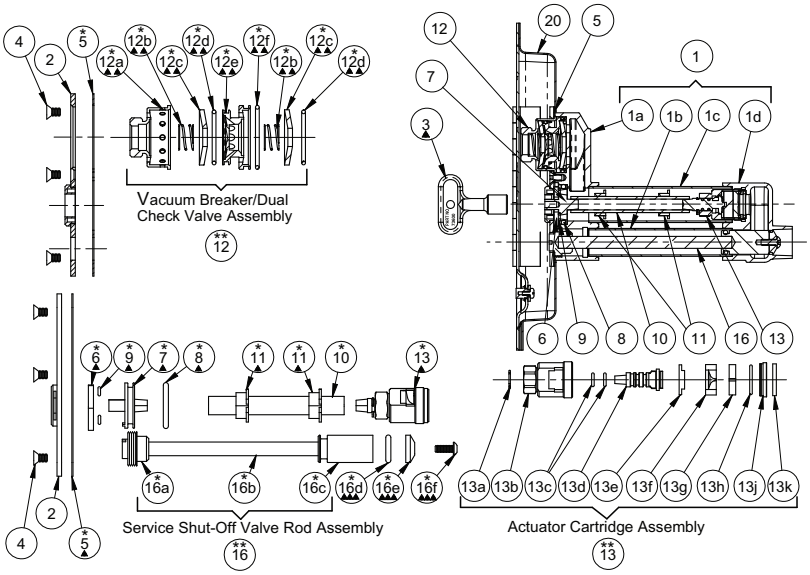

HYDRANT PARTS LIST

NO.	DESCRIPTION	NO.	DESCRIPTION
1	Casing Assembly	12e	**Flow Diverter
1a	Head	12f	**Large O-Ring
1b	Casing	13	Actuator Cartridge Assembly
1c	Casing	13a	**Retaining Ring
1d	Valve Housing	13b	**Valve Body
2	Wall Plate Assembly	13c	**Actuator O-Ring (2)
3	Key	13d	**Valve Actuator
4	Wall Plate Securing Screw (5)	13e	**Nylon Thrust Washer
5	Wall Plate Gasket	13f	**Rotating Ceramic Disc
6	Stationary Operator Piece	13g	**Fixed Ceramic Disc
7	Moveable Operator Piece	13h	**O-Ring
8	Moveable Operator O-Ring	13j	**O-Ring Gasket Retainer
9	Drain Hole Seal (2)	13k	**Rubber Seal
10	Operator Rod	16	Service Valve Rod Assembly
11	Operator Rod Guides (2)	16a	**Service Valve Operator
12	Vacuum Breaker/Dual Check Valve Assembly	16b	**Service Valve Rod
		16c	**Service Valve Plunger
12a	**Vacuum Breaker Housing	16d	Service Valve O-Ring
12b	**Spring (2)	16e	Service Valve Conical Washer
12c	**Cone Washer (2)	16f	Service Valve Washer Screw
12d	**Small O-Ring	20	Box Assembly

▲ These Replacement Parts Available in HPRK-19
▲▲ These Replacement Parts Available in HPRK-19VB
▲▲▲ These Replacement Parts Available in HPRK-15SV
*These Parts Accessible from Face of Hydrant by Removing Wall Plate Assembly.
**Parts supplied as an assembly only, see part 12,13 or 16.

†REGULARLY FURNISHED

FIG. 5517 GUARDIAN DUAL CHECK-1/4 TURN NON-FREEZE WALL HYDRANT W/AUTOMATIC DRAINING INTEGRAL VACUUM BREAKER, DUAL CHECK VALVE AND SS BOX FOR 6" DIA. CORED HOLE IN CONCRETE EXTERIOR WALL

FUNCTION: Provides positive non-freeze protection where water is required at the outside of the building and features an integral vacuum breaker and dual check valve. The stainless steel recessed box conceals the nozzle and operating mechanism. The locking cover prevents unauthorized use.

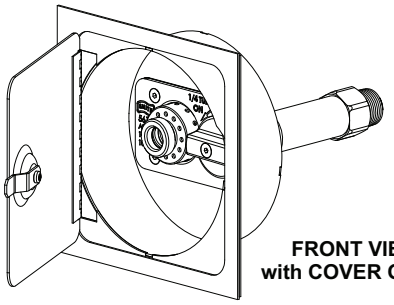

FRONT VIEW with COVER OPEN

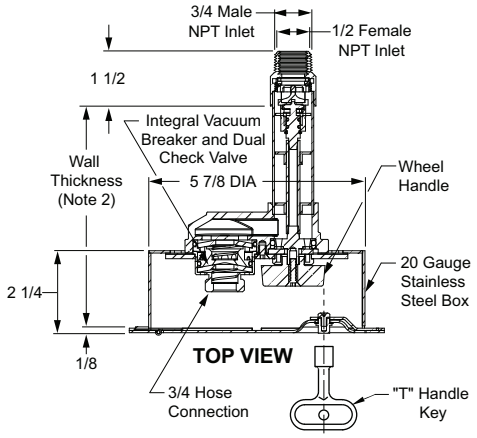

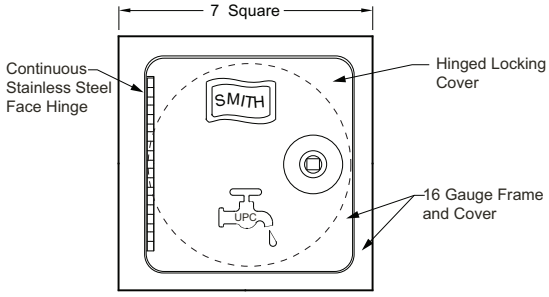

FRONT VIEW

OPTIONS:

		ADD
-CL	Cylinder Lock	240.00
-HC1	1" Hose Conn Adaptor	273.00
-IC1	1" Male Inlet Connection (Note 5)	273.00
-W	"Water" on Cover	N/C
-WC	Adjustable Wall Clamp	N/C

NOTES:

1. Recommended wall opening 6" DIA.
2. When ordering, specify wall thickness in 1" increments as follows 5,6,7,8,9.....24.
3. All Jay R. Smith hydrants are manufactured with "NO-LEAD" brazing rings, and USDA approved lubricants.
4. When wall clamp -WC is desired, increase wall thickness dimension by 2".
5. Add 3/4" to Overall Length when IC1 is specified.
6. *When specifying Fig. 5517 (-SAP) the wall thickness shall be 5.
7. The AB1953, California Lead Law, and NSF/ANSI Standard 61-2008 - Drinking Water System Components are not applicable to Jay R. Smith hydrants as they do not convey/dispense water for human consumption through drinking or cooking.
8. **FOR IRRIGATION PURPOSES ONLY.**

For Hydrant Parts Repair Kit, refer to Net Parts Price Guide.

Meets ANSI A112.21.3M Specifications
Complies w/ ASSE 1019-B,1052 and 1053.
IAPMO Listed- File #2749
Patent No. US 6,752,167

Seepage of a small amount of water may occur from the vacuum breaker upon the initial opening and closing of this hydrant. This is normal operation.

WALL THICKNESS	3/4" INLET
-SAP*	2,322.00
05 - 08"	2,630.00
09 - 16"	2,817.00
17 - 24"	3,001.00
25 - 31"	3,185.00

REGULARLY FURNISHED: Bronze Quarter Turn Non-Freeze Automatic Draining Hydrant with Stainless Steel Face, Hose Connection, Integral Vacuum Breaker and Dual Check Valve, "T" Handle Key, Wheel Handle and Stainless Steel Box with Full 180° Cover Opening.

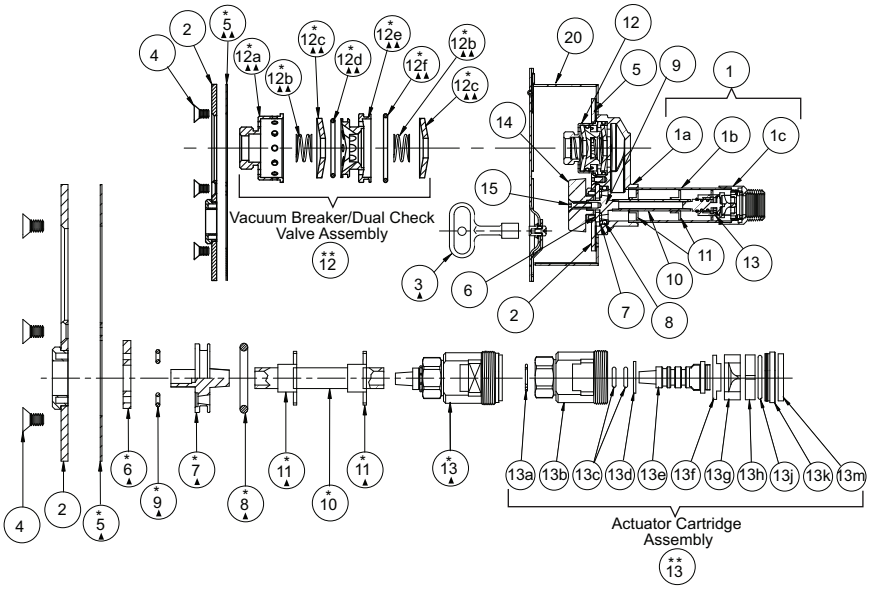

HYDRANT PARTS LIST			
NO.	DESCRIPTION	NO.	DESCRIPTION
1	Casing Assembly	12e	**Flow Diverter
1a	Head	12f	**Large O-Ring
1b	Casing	13	Actuator Cartridge Assembly
1c	Valve Housing	13a	**Retaining Ring
2	Wall Plate Assembly	13b	**Valve Body
3	Key	13c	**Actuator O-Ring (2)
4	Wall Plate Securing Screw	13d	**Nylon Thrust Spacer
5	Wall Plate Gasket (5)	13e	**Valve Actuator
6	Stationary Operator Piece	13f	**Nylon Thrust Washer
7	Moveable Operator Piece	13g	**Rotating Ceramic Disc
8	Moveable Operator O-Ring	13h	**Fixed Ceramic Disc
9	Drain Hole Seal (2)	13j	**O-Ring
10	Operator Rod	13k	**O-Ring Gasket Retainer
11	Operator Rod Guides (2)	13m	**Rubber Seal
12	Vacuum Breaker/Dual Check Valve Assembly	14	Wheel Handle
12a	**Vacuum Breaker Housing	15	Wheel Handle Screw
12b	**Spring (2)	20	Box Assembly
12c	**Cone Washer (2)		
12d	**Small O-Ring		

▲ These Replacement Parts Available in HPRK-19
▲▲ These Replacement Parts Available in HPRK-19VB
* These Parts Accessible from Face of Hydrant by Removing Wall Plate Assembly.
** Parts supplied as an assembly only, see part 12 or 13.

†REGULARLY FURNISHED

FIG. 5518 NARROW WALL WARM CLIMATE BOX TYPE HYDRANT WITH CONCEALED HOSE CONNECTION

FUNCTION: For installation in interior or exterior wall of building where a concealed hose connection is desired and there is no danger of freezing. Hydrant features an integral type vacuum breaker. The locking cover prevents unauthorized use.

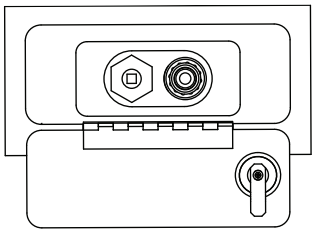

FRONT VIEW with COVER OPEN

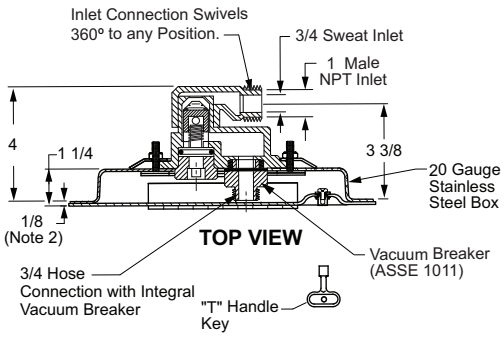

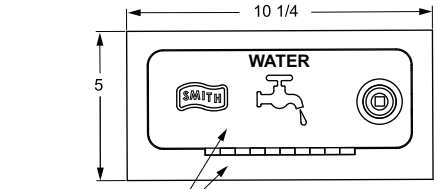

16 gauge Frame and Hinged Locking Cover (Cover opens full 180º)

FRONT VIEW

OPTIONS:

		ADD
-CL	Cylinder Lock	**240.00**
-CP	Chrome Plated Box Face	**390.00**
-NB	Nickel Bronze Box Face	**356.00**
-PB	Polished Bronze Box Face	**78.00**
-RB	Rough Bronze Box Face	**78.00**

NOTES:

1. Recommended wall opening 3 3/16 x 8 1/2".
2. Add 3/8" when optional box face material is specified.
3. All Jay R. Smith hydrants are manufactured with "NO-LEAD" brazing rings, and USDA approved lubricants.
4. The AB1953, California Lead Law, and NSF/ANSI Standard 61-2008 - Drinking Water System Components are not applicable to Jay R. Smith hydrants as they do not convey/dispense water for human consumption through drinking or cooking.
5. **FOR IRRIGATION PURPOSES ONLY.**

WALL THICKNESS	1" INLET
Narrow Wall	**1,801.00**

Seepage of a small amount of water may occur from the vacuum breaker upon the initial opening and closing of this hydrant. This is normal operation.

REGULARLY FURNISHED: All Bronze Warm Climate Hydrant with Chrome Plated Face, Hose Connection having Integral ASSE 1011 Vacuum Breaker, 360° Swivel Inlet Connection, "T" Handle Key and Stainless Steel Box.

FIG. 5518-R NARROW WALL WARM CLIMATE BOX TYPE HYDRANT WITH 6" CORED HOLE STAINLESS STEEL BOX

FUNCTION: For installation in interior or exterior wall of building where a concealed hose connection is desired and there is no danger of freezing. Hydrant features an integral type vacuum breaker. The stainless steel recessed box conceals the nozzle and operating mechanism. The locking cover prevents unauthorized use.

NPT INLET	†Stainless Steel Box
1" Male	**POA**

ADD FOR:

-CL Cylinder Lock .....**POA**
-W "Water" on Cover .....**POA**

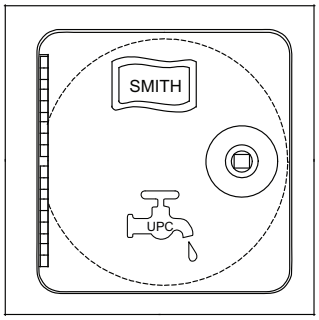

FRONT VIEW

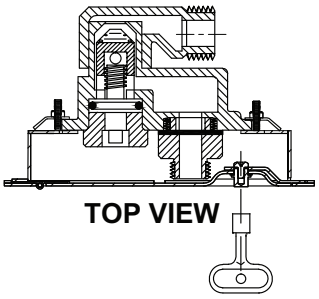

TOP VIEW

FIG. 5519 GUARDIAN DUAL CHECK-1/4 TURN NON-FREEZE WALL SS BOX-TYPE HYDRANT WITH AUTOMATIC DRAINING INTEGRAL VACUUM BREAKER, DUAL CHECK VALVE & CONCEALED HOSE CONN.

FUNCTION: Provides positive non-freeze protection where water is required at the outside of the building and features an integral vacuum breaker and dual check valve. The stainless steel recessed box conceals the nozzle and operating mechanism. The locking cover prevents unauthorized use.

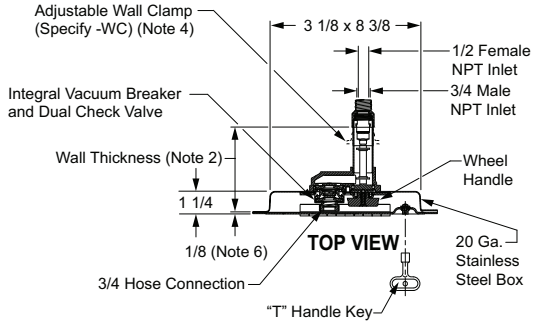

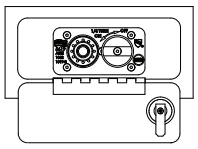

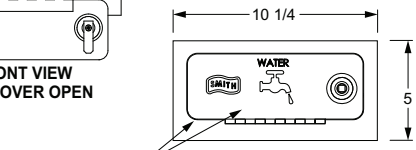

Fig. 5519

OPTIONS:

		ADD
-CL	Cylinder Lock	240.00
-CP	Chrome Plated Face	390.00
-E	Elbow Inlet	57.00
-E1	1" NPT Elbow Inlet	335.00
-HC1	1" Hose Conn Adaptor	273.00
-IC1	1" Male NPT Inlet Connection (Note 5)	273.00
-MF1	1" Straight Female Inlet	273.00
-NB	Nickel Bronze Face	356.00
-PB	Polished Bronze Face	78.00
-RB	Rough Bronze Face	78.00
-SE	Sweat Elbow Inlet	57.00
-SE1	1" NPT Sweat Elbow Inlet	335.00
-SS	Straight Sweat Inlet	N/C
-SS1	1" Straight Sweat Inlet	273.00
-WC	Adjustable Wall Clamp	N/C

		LIST
5519BASS	SS Box Assembly	1,002.00
5519BANB	Nickel Bronze Box Assembly	1,360.00
5519BAPB	Polished Bronze Box Assembly	1,084.00
5519BACP	Chrome Plated Box Assembly	1,395.00

For Hydrant Parts Repair Kit, refer to Net Parts Price Guide.

NOTES:

1. Recommended wall opening 3 3/16 x 8 1/2".
2. When ordering, specify wall thickness in 1" increments as follows 5,6,7,8,9.....24.
3. All Jay R. Smith hydrants are manufactured with "NO-LEAD" brazing rings, and USDA approved lubricants.
4. When wall clamp -WC is desired, increase wall thickness dimension by 2".
5. Add 3/4" to Overall Length when 1" NPT Male Inlet Connection is specified.
6. Add 3/8" When Optional Box Face Material is specified.
7. *When specifying Fig. 5519 (-SAP) the wall thickness shall be 3".
8. The AB1953, California Lead Law, and NSF/ANSI Standard 61-2008 - Drinking Water System Components are not applicable to Jay R. Smith hydrants as they do not convey/dispense water for human consumption through drinking or cooking.
9. **FOR IRRIGATION PURPOSES ONLY.**

WALL THICKNESS	3/4" INLET	APPROX WEIGHT LBS
-SAP*	1,970.00	8
05 - 08"	2,278.00	9
09 - 16"	2,466.00	10
17 - 24"	2,645.00	11
25 - 31"	2,833.00	14

REGULARLY FURNISHED: Bronze Quarter Turn Non-Freeze Automatic Draining Hydrant with Stainless Steel Face, Hose Connection, Integral Vacuum Breaker and Dual Check Valve, "T" Handle Key, Wheel Handle and Stainless Steel Box with Full 180° Cover Opening.

Seepage of a small amount of water may occur from the vacuum breaker upon the initial opening and closing of this hydrant. This is normal operation.

Meets ANSI A112.21.3M Specifications
Complies w/ ASSE 1019-B,1052 and 1053.
IAPMO Listed- File #2749
Patent No. US 6,752,167

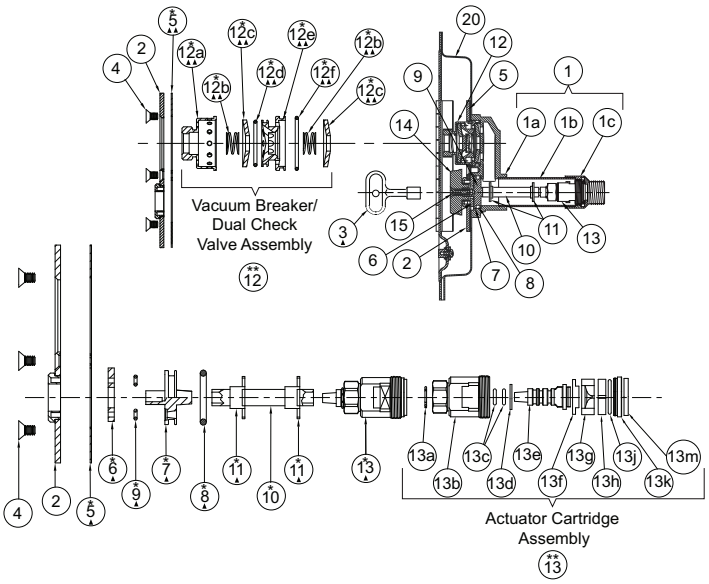

HYDRANT PARTS LIST					
NO.	DESCRIPTION	NO.	DESCRIPTION	NO.	DESCRIPTION
1	Casing Assembly	12	Vacuum Breaker/Dual Check Valve Assembly	13e	**Valve Actuator
1a	Head	12a	**Vacuum Breaker Housing	13f	**Nylon Thrust Washer
1b	Casing	12b	**Spring (2)	13g	**Rotating Ceramic Disc
1c	Valve Housing	12c	**Cone Washer (2)	13h	**Fixed Ceramic Disc
2	Wall Plate Assembly	12d	**Small O-Ring	13j	**O-Ring
3	Key	12e	**Flow Diverter	13k	**O-Ring Gasket Retainer
4	Wall Plate Securing Screw (5)	12f	**Large O-Ring	13m	**Rubber Seal
5	Wall Plate Gasket	13	Actuator Cartridge Assembly	14	Wheel Handle
6	Stationary Operator Piece	13a	**Retaining Ring	15	Wheel Handle Screw
7	Movable Operator Piece	13b	**Valve Body	20	Box Assembly
8	Movable Operator O-Ring	13c	**Actuator O-Ring (2)		
9	Drain Hole Seal (2)	13d	**Nylon Thrust Spacer		
10	Operator Rod				
11	Operator Rod Guides (2)				

▲ These Replacement Parts Available in HPRK-19

▲▲ These Replacement Parts Available in HPRK-19VB

* These Parts Accessible from Face of Hydrant by Removing Wall Plate Assembly.

* * Parts supplied as an assembly only, see part 12 or 13.

†REGULARLY FURNISHED

FIG. 5560QT SER. QUARTERHORSE – 1/4 TURN "TWIN TEMP" BRONZE BOX-TYPE HYDRANT W/CONCEALED HOSE CONNECTION FOR HOT & COLD WATER

FUNCTION: Provides positive non-freeze protection where water is required at the outside of the building. Ideal for use in food handling areas, dairies and other places where both hot and cold water are desired. The recessed box conceals the hose connection and operating mechanisms. 1/4 turn of the key allows full flow to be obtained. The locking cover prevents unauthorized use.

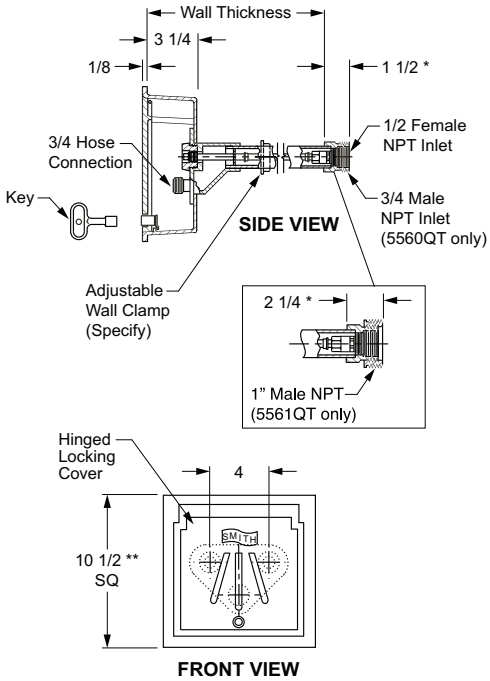

Fig. 5560QT

OPTIONS:		ADD
-CL	Cylinder Lock	240.00
-E	Elbow Inlets	114.00
-E1	1" NPT Elbow Inlets	669.00
-H	3/4" Vacuum Breaker	175.00
-HC1	1" Hose Conn Adaptor	273.00
-MF1	1" Straight Female Inlets	545.00
-SE	Sweat Elbow Inlets	116.00
-SE1	1" NPT Sweat Elbow Inlets	669.00
-SS	Straight Sweat Inlets	N/C
-SS1	1" Straight Sweat Inlets	545.00
-W	"Water" on Cover	N/C
-WC	Adjustable Wall Clamps	N/C
-WH	Wheel Handle	741.00

		DEDUCT
-LB	Less Box	1,173.00
-NB	NB Face, Deduct	57.00
-PB	PB Face, Deduct	89.00
-RB	RB Face, Deduct	89.00

For Hydrant Parts Repair Kit, refer to Net Parts Price Guide.

*When specifying a 5561QT, add 3/4" to length of inlet connection as shown.

WALL THICKNESS	5560QT 3/4" INLET	5561QT 1" INLET	APPROX WEIGHT LBS
-SAP	4,530.00	5,063.00	12
08"	4,973.00	5,503.00	13
10, 12, 14"	5,263.00	5,801.00	14
16, 18"	5,559.00	6,093.00	15
20, 22, 24"	5,859.00	6,388.00	17

REGULARLY FURNISHED: Bronze Quarter Turn Non-Freeze "Twin-Temp" Hydrant with Hose Connection, "T" Handle Key, and Bronze Box with Chrome Plated Face, and Inlet Size Furnished as Indicated by Figure Number Selected.

NOTES:

1. **Recommended Wall Opening 9 3/4" x 9 3/4".
2. When ordering, specify wall thickness in 2" increments as follows: 6, 8, 10, 12, 14, 16, 18, 20, 22 or 24. When wall clamp -WC is desired, increase wall thickness dimension by 2".
3. For 6" wall use 5560QT-SAP or 5561QT-SAP.
4. All Jay R. Smith hydrants are manufactured with "NO-LEAD" brazing rings and USDA approved lubricants.
5. The AB1953, California Lead Law, and NSF/ANSI Standard 61-2008 - Drinking Water System Components are not applicable to Jay R. Smith hydrants as they do not convey/dispense water for human consumption through drinking or cooking.
6. **FOR IRRIGATION PURPOSES ONLY.**

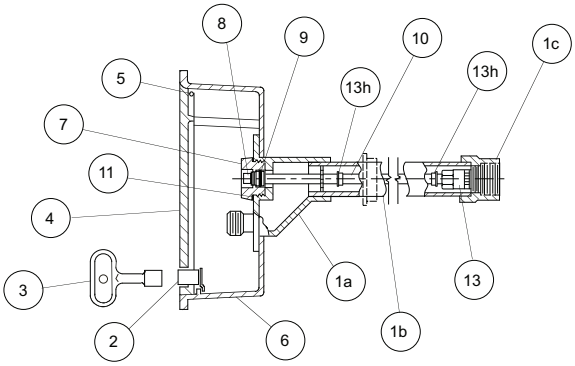

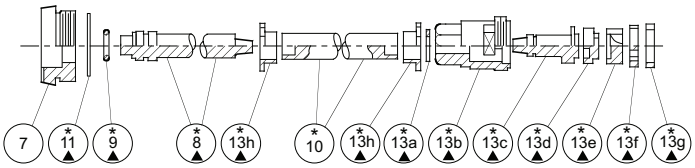

HYDRANT PARTS LIST					
NO.	DESCRIPTION	NO.	DESCRIPTION	NO.	DESCRIPTION
1	Head/Casing Assembly	6	Box	13b	Valve Body
1a	Head	7	Face Nut	13c	Valve Actuator
1b	Casing	8	Actuator Shaft	13d	Nylon Thrust Washer
1c	Valve Housing	9	Actuator "O" Ring	13e	Rotating Ceramic Disc
2	Locking Device	10	Operator Rod	13f	Fixed Ceramic Disc
3	Key	11	Face Nut Washer	13g	Silicon Rubber Seal
4	Cover	13	Valve Body Assembly	13h	Retainer Guide (2)
5	Hinge Pins (2)	13a	Retaining Ring		

▲ These Replacement Parts Available in HPRK-7 (2) Repair Kits

* These Parts Accessible from Face of Hydrant by Removing Face Nut.

†REGULARLY FURNISHED

FIG. 5572, 5573 MILD CLIMATE ANTI-SIPHON SILLCOCK AND STAINLESS STEEL BOX

FUNCTION: For installation in interior and exterior wall locations of buildings that are not subject to freezing. Vacuum breaker prevents contamination of potable water supply and conforms to the requirements and ASSE Standard 1011. The stainless steel recessed box conceals the nozzle and operating mechanism. The locking cover prevents unauthorized use.

Inlet Connection	Series No.	†Rough Brass
1/2”	5572	**POA**
3/4”	5573	**POA**

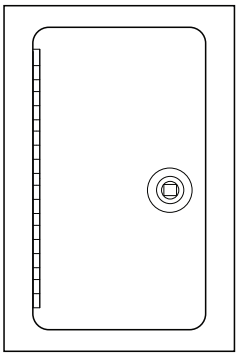

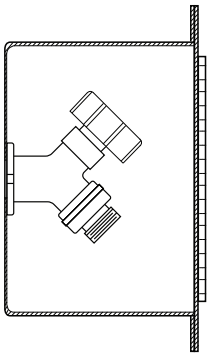

Female Threaded Inlet

FIG. 5572-BFP, 5573-BFP MILD CLIMATE ANTI-SIPHON SILLCOCK W/DUAL CHECK VALVE AND SS BOX

FUNCTION: For installation in interior and exterior wall locations of buildings that are not subject to freezing. Dual Check prevents backflow due to low head pressure and conforms to the requirements of ASSE Standard 1052. The stainless steel recessed box conceals the nozzle and operating mechanism. The locking cover prevents unauthorized use.

Inlet Connection	Series No.	†Rough Brass
1/2”	5572-BFP	**POA**
3/4”	5573-BFP	**POA**

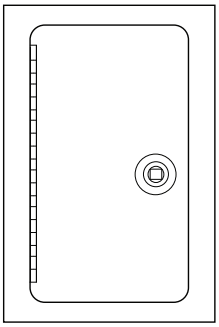

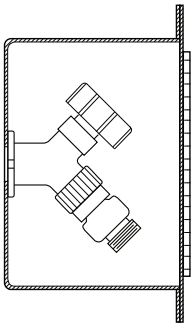

Female Threaded Inlet

FIG. 5609QT QUARTERHORSE - 1/4 TURN HYDRANT W/INTEGRAL VACUUM BREAKER AND EXPOSED HOSE CONNECTION

FUNCTION: For installation in interior or exterior building walls where an exposed hose connection is acceptable. Provides positive non-freeze protection and features an integral vacuum breaker. Adaptable to all types of wall construction.

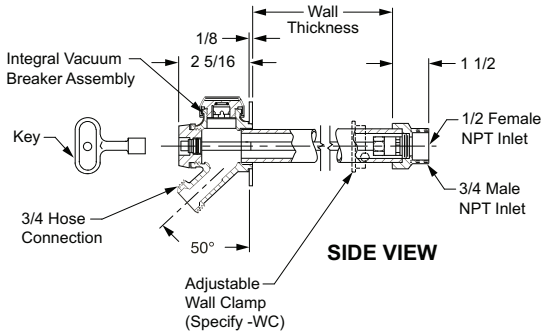

SIDE VIEW

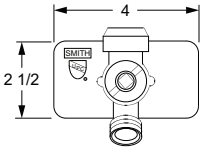

FRONT VIEW

Fig. 5609QT

OPTIONS:		ADD
-CP	Chrome Plated Face	121.00
-E	Elbow Inlet	57.00
-E1	1" NPT Elbow Inlet	335.00
-HC1	1" Hose Conn Adaptor	273.00
-IC1	1" Male NPT Inlet Connection*	273.00
-MF1	1" Straight Female Inlet	273.00
-PB	Polished Bronze Face	78.00
-SS	Straight Sweat Inlet	N/C
-SS1	1" Straight Sweat Inlet	273.00
-SE	Sweat Elbow Inlet	57.00
-SE1	1" NPT Sweat Elbow Inlet	335.00
-WC	Adjustable Wall Clamp	N/C
-WH	Wheel Handle	370.00

*Add 3/4" to Overall Length When Specified

For Hydrant Parts Repair Kit, refer to Net Parts Price Guide.

NOTES:

1. Recommended wall opening 2 x 2. Hydrant shall be in the vertical position only, the hose connection must be on the bottom.
2. When ordering, specify wall thickness in 02" increment as follows: 04, 06, 08, 10, 12, 14, 16, 18, 20, 22 or 24". When wall clamp -WC is desired, increase wall thickness dimension by 2".
3. All Jay R. Smith hydrants are manufactured with "NO-LEAD" brazing rings and USDA approved lubricants.
4. The AB1953, California Lead Law, and NSF/ANSI Standard 61-2008 - Drinking Water System Components are not applicable to Jay R. Smith hydrants as they do not convey/dispense water for human consumption through drinking or cooking.
5. For the hydrant to drain properly and provide non-freeze protection when used with a hose, the **Hose must be removed** from the nozzle after each use.
6. **FOR IRRIGATION PURPOSES ONLY.**

Seepage of a small amount of water may occur from the vacuum breaker upon the initial opening and closing of this hydrant. This is normal operation.

WALL THICKNESS	3/4" INLET	APPROX WEIGHT LBS
-SAP	837.00	7
04, 06"	1,110.00	8
08, 10, 12, 14"	1,293.00	9
16, 18, 20, 22"	1,473.00	10
24, 26, 28, 30"	1,663.00	12

REGULARLY FURNISHED: Bronze Nickel Plated Quarter Turn Non-Freeze Hydrant with 3/4" Hose Connection, Backer Plate, Integral Vacuum Breaker with Vandal Resistant Cap and "T" Handle Key.

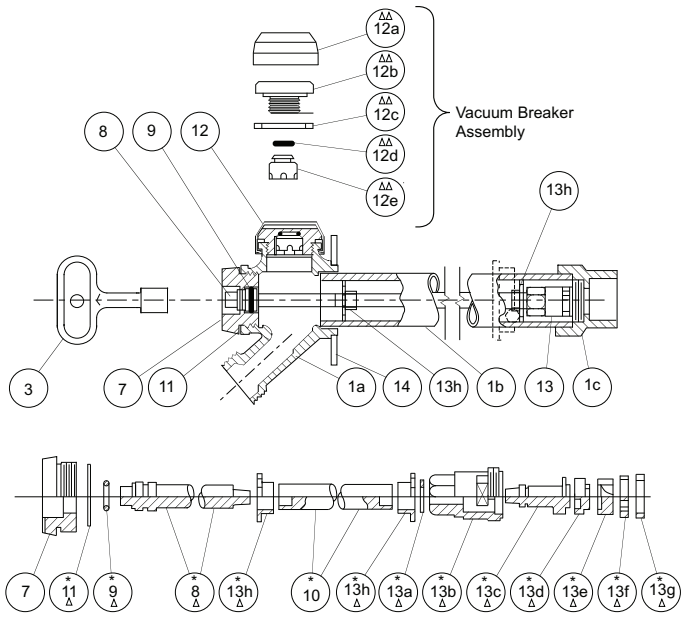

HYDRANT PARTS LIST					
NO.	DESCRIPTION	NO.	DESCRIPTION	NO.	DESCRIPTION
1	Head/Casing Assembly	10	Operator Rod	13a	Retaining Ring
1a	Head	11	Face Nut Washer	13b	Valve Body
1b	Casing	12	Vacuum Breaker Assembly	13c	Valve Actuator
1c	Valve Housing	12a	VB Cap	13d	Nylon Thrust Washer
3	Key	12b	VB Body	13e	Rotating Ceramic Disc
7	Face Nut	12c	VB Washer	13f	Fixed Ceramic Disc
8	Actuator Shaft	12d	VB "O" Ring	13g	Silicon Rubber Seal
9	Actuator "O" Ring	12e	VB Piston	13h	Retainer Guide (2)
		13	Valve Body Assembly	14	Backer Plate w/Screws

Δ These Replacement Parts Available in HPRK-7

ΔΔ These Replacement Parts Available in HPRK-7VB

* These Parts Accessible from Face of Hydrant by Removing Face Nut.

†REGULARLY FURNISHED

FIG. 5615 GUARDIAN PLUS DUAL CHECK, 1/4 TURN NON-FREEZE HYDRANT WITH AUTOMATIC DRAINING INTEGRAL VACUUM BREAKER, INTEGRAL SERVICE SHUT-OFF VALVE, DUAL CHECK VALVE

FUNCTION: For installation in interior or exterior walls where an exposed hose connection is acceptable. It provides positive non-freeze protection and integral water service shut-off valve. Adaptable to all types of wall construction.

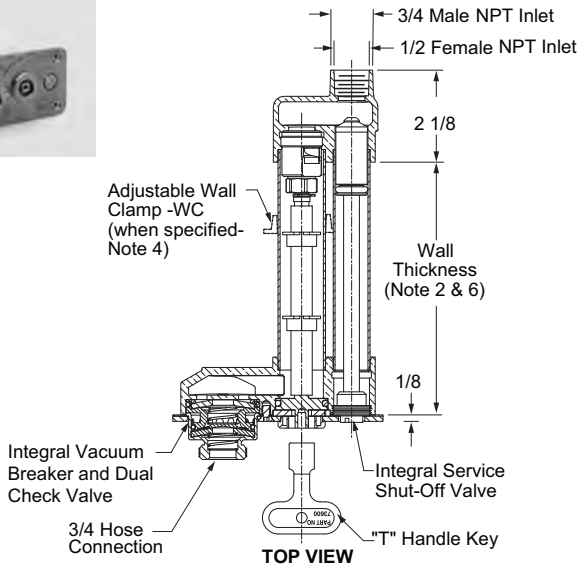

TOP VIEW

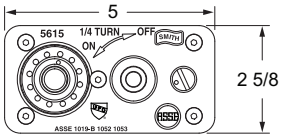

FRONT VIEW

OPTIONS: **NET ADD**

-HC1	1" Hose Conn Adaptor	**POA**
-IC1	1" Male NPT Inlet Connection (Note 5)	**POA**
-WC	Adjustable Wall Clamp	**POA**
-WH	Wheel Handle	**POA**

NOTES:

1. Recommended wall opening 2 1/4 x 4 3/4.
2. When ordering, specify wall thickness in 1" increments as follows 4, 5, 6.....24.
3. All Jay R. Smith hydrants are manufactured with "NO-LEAD" brazing rings and USDA approved lubricants.
4. When wall clamp -WC is desired, increase wall thickness dimension by 2.
5. Add 3/4" to Overall Length when IC1 is specified.
6. *When specifying (-SAP) the wall thickness shall be 2.
7. The AB1953, California Lead Law, and NFS/ANSI Standard 61-2008 - Drinking Water Systems Components are not applicable to Jay R. Smith hydrants as they do not convey/dispense water for human consumption through drinking or cooking.
8. An additional inlet isolation or shut-off valve is usually unneeded with this hydrant, but if required it should be mounted 10 ft or more from the hydrant inlet.
9. Temperature Range: 33.0° F to 140.0° F (.06° C to 60.0° C).
10. This ASSE 1019 device shall not be subjected to more than twelve (12) hours of continuous water pressure.
11. **FOR IRRIGATION PURPOSES ONLY.**

For Hydrant Parts Repair Kit, refer to Net Parts Price Guide.

Meets ASME A112.21.3M Specifications
Complies w/ ASSE 1019-B,1052 and 1053.
IAPMO Listed- File #2749
PATENT PENDING

Seepage of a small amount of water may occur from the vacuum breaker upon the initial opening and closing of this hydrant. This is normal operation.

REGULARLY FURNISHED: Bronze Quarter Turn Non-Freeze, Automatic Draining Hydrant with Stainless Steel Face, Hose Connection, Integral Vacuum Breaker, Integral Service Shut-Off Valve, Dual Check Valve, "T" Handle Key.

WALL THICKNESS	3/4" INLET
-SAP*	**POA**
05 - 08"	**POA**
09 - 16"	**POA**
17 - 24"	**POA**
25 - 31"	**POA**

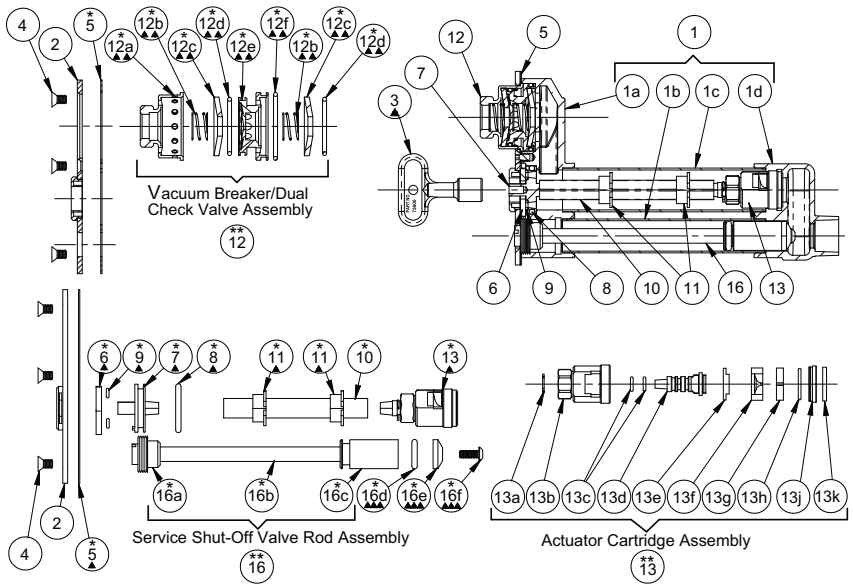

HYDRANTS PARTS LIST

NO.	DESCRIPTION	NO.	DESCRIPTION
1	Casing Assembly	12e	**Flow Diverter
1a	Head	12f	**Large O-Ring
1b	Casing	13	Actuator Cartridge Assembly
1c	Casing		
1d	Valve Housing	13a	**Retaining Ring
2	Wall Plate Assembly	13b	**Valve Body
3	Key	13c	**Actuator O-Ring (2)
4	Wall Plate Securing Screw (5)	13d	**Valve Actuator
5	Wall Plate Gasket	13e	**Nylon Thrust Washer
6	Stationary Operator Piece	13f	**Rotating Ceramic Disc
7	Moveable Operator Piece	13g	**Fixed Ceramic Disc
8	Moveable Operator O-Ring	13h	**O-Ring
9	Drain Hole Seal (2)	13j	**O-Ring Gasket Retainer
10	Operator Rod	13k	**Rubber Seal
11	Operator Rod Guides (2)	16	Service Valve Rod Assembly
12	Vacuum Breaker/Dual Check Valve Assembly	16a	**Service Valve Operator
		16b	**Service Valve Rod
12a	**Vacuum Breaker Housing	16c	**Service Valve Plunger
12b	**Spring (2)	16d	Service Valve O-Ring
12c	**Cone Washer (2)	16e	Service Valve Conical Washer
12d	**Small O-Ring	16f	Service Valve Washer Screw

▲ These Replacement Parts Available in HPRK-19
▲▲ These Replacement Parts Available in HPRK-19VB
▲▲▲ These Replacement Parts Available in HPRK-15SV
*These Parts Accessible from Face of Hydrant by Removing Wall Plate Assembly.
**Parts supplied as an assembly only, see part 12,13 or 16.

†REGULARLY FURNISHED

FIG. 5618 NARROW WALL WARM CLIMATE HYDRANT WITH INTEGRAL VACUUM BREAKER AND EXPOSED HOSE CONNECTION

FUNCTION: For installation in interior or exterior wall of building where a concealed hose connection is desired and there is no danger of freezing. Hydrant features an integral type vacuum breaker. The locking cover prevents unauthorized use.

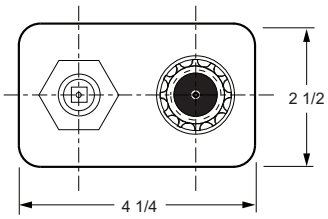

FRONT VIEW

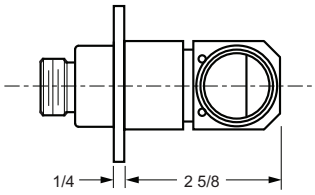

SIDE VIEW

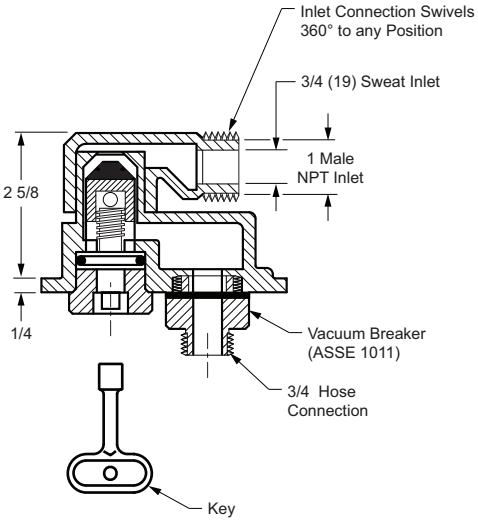

TOP VIEW

NOTES:

1. Recommended wall opening 2 x 3 3/4".
2. All Jay R. Smith hydrants are manufactured with "NO-LEAD" brazing rings, and USDA approved lubricants.
3. The AB1953, California Lead Law, and NSF/ANSI Standard 61-2008 - Drinking Water System Components are not applicable to Jay R. Smith hydrants as they do not convey/dispense water for human consumption through drinking or cooking.
4. Lead Free Construction/Materials.
5. **FOR IRRIGATION PURPOSES ONLY.**

Seepage of a small amount of water may occur from the vacuum breaker upon the initial opening and closing of this hydrant. This is normal operation.

WALL THICKNESS	1" INLET
Narrow Wall	**856.00**

REGULARLY FURNISHED: All Bronze Warm Climate Hydrant with Chrome Plated Face, Hose Connection and Integral ASSE 1011 Vacuum Breaker, 360° Swivel Inlet Connection and "T" Handle Key.

†REGULARLY FURNISHED

FIG. 5619 GUARDIAN DUAL CHECK-1/4 TURN HYDRANT W/INTEGRAL VACUUM BREAKER, DUAL CHECK VALVE AND EXPOSED HOSE CONNECTION

FUNCTION: For installation in interior or exterior building walls where an exposed hose connection is acceptable. Provides positive non-freeze protection. Adaptable to all types of wall construction.

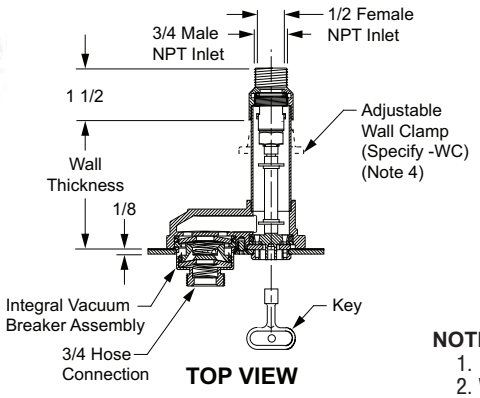

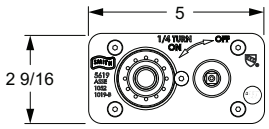

FRONT VIEW
Fig. 5619

OPTIONS:		ADD
-CP	Chrome Plated Face	**121.00**
-E	Elbow Inlet	**57.00**
-E1	1" NPT Elbow Inlet	**335.00**
-HC1	1" Hose Conn Adaptor	**273.00**
-IC1	1" Male NPT Inlet Connection (Note 5)	**273.00**
-MF1	1" Straight Female Inlet	**273.00**
-PB	Polished Bronze Face	**78.00**
-SE	Sweat Elbow Inlet	**57.00**
-SE1	1" NPT Sweat Elbow Inlet	**335.00**
-SS	Straight Sweat Inlet	**N/C**
-SS1	1" Straight Sweat Inlet	**273.00**
-WC	Adjustable Wall Clamp	**N/C**
-WH	Wheel Handle	**370.00**

For Hydrant Parts Repair Kit, refer to Net Parts Price Guide.

NOTES:
1. Recommended wall opening 2 1/4 x 4".
2. When ordering, specify wall thickness in 1 increments as follows 4,5,6,7,8.....24.
3. All Jay R. Smith hydrants are manufactured with "NO-LEAD" brazing rings, and USDA approved lubricants.
4. When wall clamp -WC is desired, increase wall thickness dimension by 2".
5. Add 3/4" to Overall Length When Specified.
6. *When specifying Fig. 5619 (-SAP) the wall thickness shall be 2".
7. The AB1953, California Lead Law, and NSF/ANSI Standard 61-2008 - Drinking Water System Components are not applicable to Jay R. Smith hydrants as they do not convey/dispense water for human consumption through drinking or cooking.
8. **FOR IRRIGATION PURPOSES ONLY.**

REGULARLY FURNISHED: Bronze Quarter Turn Non-Freeze Automatic Draining Hydrant with Stainless Steel Face, Hose Connection, Integral Vacuum Breaker and Dual Check Valve and "T" Handle Key.

WALL THICKNESS	3/4" INLET	APPROX WEIGHT LBS
-SAP*	**968.00**	7
04 - 07"	**1,277.00**	8
08 - 15"	**1,464.00**	9
16 - 23"	**1,642.00**	10
24 - 30"	**1,823.00**	12

Meets ANSI A112.21.3M Specifications
Complies w/ ASSE 1019-B,1052 and 1053.
IAPMO Listed- File #2749
Patent No. US 6,752,167

Seepage of a small amount of water may occur from the vacuum breaker upon the initial opening and closing of this hydrant. This is normal operation.

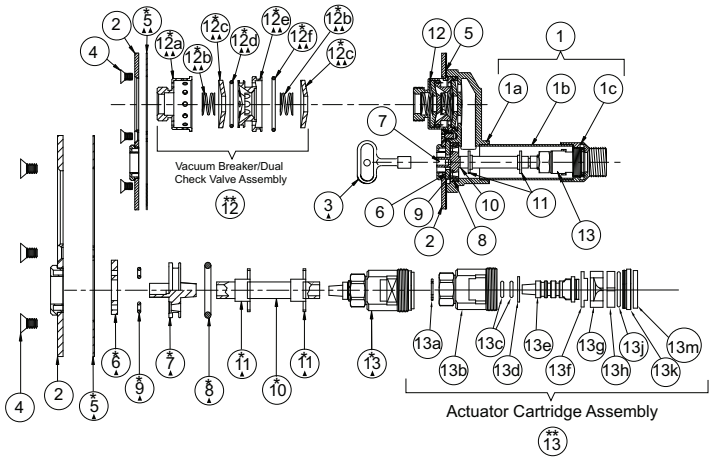

HYDRANT PARTS LIST					
NO.	DESCRIPTION	NO.	DESCRIPTION	NO.	DESCRIPTION
1	Casing Assembly	10	Operator Rod	13a	**Retaining Ring
1a	Head	11	Operator Rod Guides (2)	13b	**Valve Body
1b	Casing	12	Vacuum Breaker/Dual Check Valve Assembly	13c	**Actuator O-Ring (2)
1c	Valve Housing			13d	**Nylon Thrust Spacer
2	Wall Plate Assembly	12a	**Vacuum Breaker Housing	13e	**Valve Actuator
3	Key	12b	**Spring (2)	13f	**Nylon Thrust Washer
4	Wall Plate Securing Screw (5)	12c	**Cone Washer (2)	13g	**Rotating Ceramic Disc
5	Wall Plate Gasket	12d	**Small O-Ring	13h	**Fixed Ceramic Disc
6	Stationary Operator Piece	12e	**Flow Diverter	13j	**O-Ring
7	Movable Operator Piece	12f	**Large O-Ring	13k	**O-Ring Gasket Retainer
8	Movable Operator O-Ring	13	Actuator Cartridge Assembly	13m	**Rubber Seal
9	Drain Hole Seal (2)				

▲ These Replacement Parts Available in HPRK-19
▲▲ These Replacement Parts Available in HPRK-19VB
* These Parts Accessible from Face of Hydrant by Removing Wall Plate Assembly.
** Parts supplied as an assembly only, see part 12 or 13.

FIG. 5630 SERIES FREEZELESS SILLCOCK

FUNCTION: For installation in interior or exterior building walls where an exposed hose connection is acceptable. Self-Draining feature provides positive non-freeze protection and integral vacuum breaker provides backflow protection.

Wall Size	*Inlet Connection	Series No.	†Chrome
4”	3/4” x 1/2”	5630-04	**POA**
6”	3/4” x 1/2”	5630-06	**POA**
8”	3/4” x 1/2”	5630-08	**POA**
10”	3/4” x 1/2”	5630-10	**POA**
12”	3/4” x 1/2”	5630-12	**POA**

*Male Threaded x Female Threaded Inlet

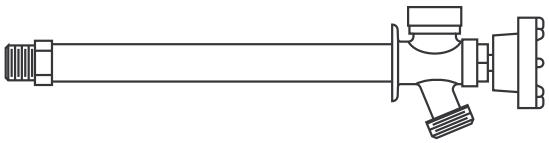

FIG. 5660QT-SAP, 5661QT-SAP EXPOSED 1/4 TURN WARM CLIMATE "TWIN TEMP" WALL HYDRANT

FUNCTION: For installation in walls where there is no danger of freezing. Ideal for use in food handling areas, dairies and other places where both hot and cold water are desired. 1/4 turn of the key allows full flow to be obtained.

Inlet Connection	Series No.	†Polished Brass Face
1/2" Female & 3/4" Male	5660QT-SAP	POA
1" Male	5661QT-SAP	POA

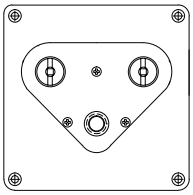

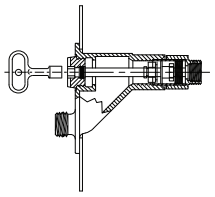

ADD FOR:

-H Vacuum Breaker Self Draining Type .....**POA**

-WH Wheel Handle (Each) **requires 2** .....**POA**

FIG. 5660QT, 5661QT EXPOSED 1/4 TURN WARM CLIMATE "TWIN TEMP" WALL HYDRANT

FUNCTION: Provides positive non-freeze protection where water is required at the outside of the building. Ideal for use in food handling areas, dairies and other places where both hot and cold water are desired. 1/4 turn of the key allows full flow to be obtained.

5660QT

Wall Thickness	Inlet Connection	†Polished Brass Face
8"	1/2" Female & 3/4" Male	POA
10"	1/2" Female & 3/4" Male	POA
12"	1/2" Female & 3/4" Male	POA

5661QT

Wall Thickness	Inlet Connection	†Polished Brass Face
8"	1" Male	POA
10"	1" Male	POA
12"	1" Male	POA

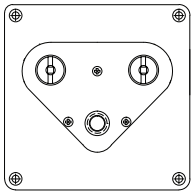

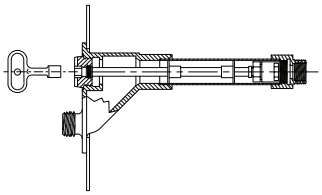

ADD FOR:

-H Vacuum Breaker Self Draining Type .....**POA**

-WH Wheel Handle (Each) **requires 2** .....**POA**

FIG. 5670 HOSE VALVE BENT NOSE WITH FLANGE

FUNCTION: For installation in interior and exterior wall locations of buildings that are not subject to freezing. Valves feature a replaceable cartridge which contains all wearing parts including the seat. Optional vacuum breaker prevents contamination of potable water supply and conforms to the requirements of ASSE Standard 1011.

FIG. NO.	NPT INLET	†Rough Brass	Polished Chrome Plated	Rough Chrome Plated
5670	3/4"	POA	POA	POA

Female Threaded Inlet

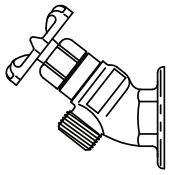

Fig. 5670
(Less Vacuum Breaker)

FIG. 5670-H HOSE VALVE BENT NOSE WITH FLANGE W/VACUUM BREAKER

FUNCTION: For installation in interior and exterior wall locations of buildings that are not subject to freezing. Valves feature a replaceable cartridge which contains all wearing parts including the seat. Optional vacuum breaker prevents contamination of potable water supply and conforms to the requirements of ASSE Standard 1011.

FIG. NO.	NPT INLET	†Rough Brass	Polished Chrome Plated	Rough Chrome Plated
5670-H	3/4"	POA	POA	POA

Female Threaded Inlet

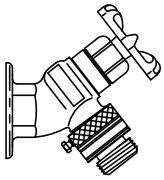

Fig. 5670 -H
(With Vacuum Breaker)

FIG. 5672, 5673 MILD CLIMATE SILLCOCK

FUNCTION: For installation in walls where there is no danger of freezing. Ideal for use in food handling areas, dairies and other places where both hot and cold water are desired. 1/4 turn of the key allows full flow to be obtained.

Inlet Connection	Series No.	†Rough Brass
1/2”	5672	POA
3/4”	5673	POA

Inlet Connection	Series No.	†Rough Chrome
1/2”	5672 (-CR)	POA
3/4”	5673 (-CR)	POA

ADD FOR:

-BFP Dual Check Valve .....**POA**

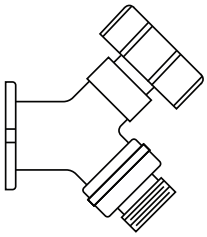

FIG. 5675 HOSE VALVES BENT NOSE

FUNCTION: For installation on supply pipes 6” to 36” high in interior and exterior locations that are not subject to freezing. Valves feature a replaceable cartridge which contains all wearing parts including the seat. Optional vacuum breaker prevents contamination of potable water supply and conforms to the requirements of ASSE Standard 1011.

NPT INLET	†Rough Brass	Polished Chrome Plated	Rough Chrome Plated
3/4”	POA	POA	POA

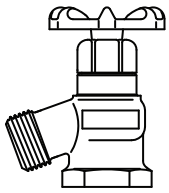

Fig. 5675
(Less Vacuum Breaker)

Female Threaded Inlet

FIG. 5675-H HOSE VALVES BENT NOSE W/VACUUM BREAKER

NPT INLET	†Rough Brass	Polished Chrome Plated	Rough Chrome Plated
3/4”	POA	POA	POA

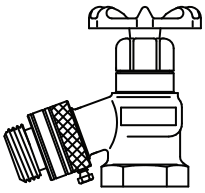

Fig. 5675-H
(With Vacuum Breaker)

Female Threaded Inlet

HYDRANTS

†REGULARLY FURNISHED

FIG. 5810 SER. BRONZE NON-FREEZE GROUND HYDRANT W/ROUGH BRONZE BOX AND BRONZE CASING

FUNCTION: A Hydrant with a hinged covered box, for positive protection against freezing when buried outside or in unheated areas and the closing valve is located below the frost line. When hydrant is shut off, water is drained from the casing through the drain hole in the valve housing. The locking cover prevents unauthorized use.

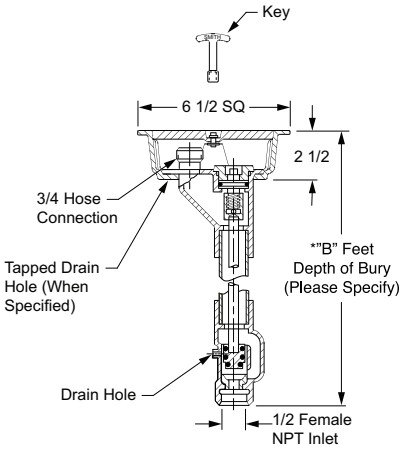

SIDE VIEW

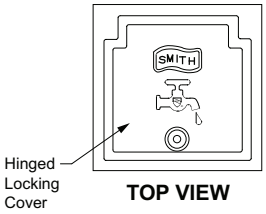

TOP VIEW

Fig. 5810

OPTIONS:		ADD
-CL	Cylinder Lock	240.00
-CP	Chrome Plated Box	390.00
-H	3/4" Vacuum Breaker	175.00
-HC1	1" Hose Conn Adaptor	273.00
-LD	Less Drain Hole	N/C
-N	1/8" NPT Drain Hole in Box	240.00
-NB	Nickel Bronze Box	356.00
-NV	1/8" NPT Drain Hole in Housing	N/C
-PB	Polished Bronze Box	78.00
-W	"Water" on Cover	N/C

For Hydrant Parts Repair Kit, refer to Net Parts Price Guide.

NOTES:

1. Recommended Box-out 5 3/4 x 5 3/4".
2. All Jay R. Smith hydrants are manufactured with "NO-LEAD" brazing rings and USDA approved lubricants.
3. The AB1953, California Lead Law, and NSF/ANSI Standard 61-2008 - Drinking Water System Components are not applicable to Jay R. Smith hydrants as they do not convey/dispense water for human consumption through drinking or cooking.
4. **FOR IRRIGATION PURPOSES ONLY.**
6. Removal of drain hole eliminates the non-freeze feature and qualifies this hydrant as warm climate hydrant only.

Addition of vacuum breaker will not allow draining of the casing. Smith

*B = 9 1/2" when specified (-SAP)

B FEET DEPTH OF BURY	5810 3/4" INLET	5811 1" INLET	APPROX WEIGHT LBS
-SAP	2,591.00	3,123.00	8
02'	2,591.00	3,123.00	17
03'	2,795.00	3,325.00	21
04'	2,998.00	3,527.00	25
05'	3,201.00	3,732.00	33
06'	3,405.00	3,934.00	39
07'	3,607.00	4,136.00	45
08'	3,809.00	4,344.00	52
09'	4,012.00	4,546.00	54
10'	4,218.00	4,749.00	56

REGULARLY FURNISHED: Bronze Non-Freeze Ground Hydrant with "T" Handle Key and Bronze Hydrant Box. Inlet Size Furnished as Indicated by Figure Number Selected.

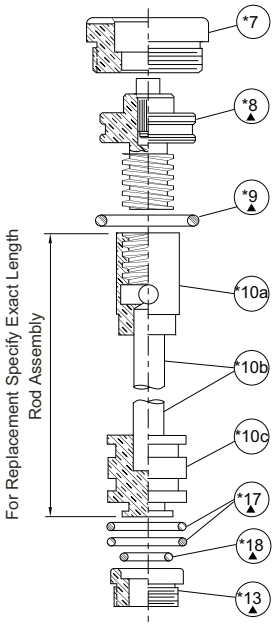

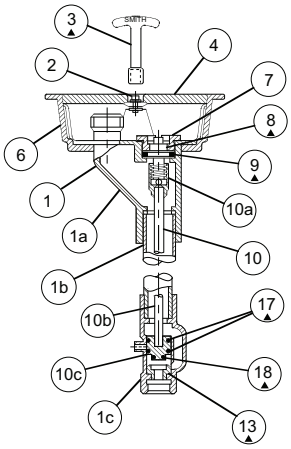

REPLACEMENT PARTS - SPECIFY FIG. NO. WHEN ORDERING			
No.	DESCRIPTION	No.	DESCRIPTION
1	Head/Casing Assembly	8	Operating Screw
1a	Head	9	Operating Screw "O" Ring
1b	Casing	10	Operating Rod Assembly
1c	Valve Housing	10a	Coupling
2	Locking Device	10b	Rod
3	Key	10c	Plunger
4	Cover	13	Removable Seat
5	Hydrant Cover Hinge Pins (2)	17	Plunger "O" Ring
6	Box	18	Plunger "O" Ring
7	Face Nut		

▲These Replacement Parts Available in HPRK-41

*These parts are accessible from face of hydrant by removing face nut.

MAINTENANCE INSTRUCTIONS

1. Shut off water supply.
2. Remove face nut.
3. Pull stem out for complete access to all working parts.
4. Check all working parts for replacement.
5. Replace complete stem assembly and face nut.

†REGULARLY FURNISHED

FIG. 5810-F SER. BRONZE NON-FREEZE GROUND HYDRANT W/ROUGH BRONZE BOX, INTEGRAL FLASHING FLANGE AND CLAMP

FUNCTION: A Hydrant with a hinged covered box, for positive protection against freezing when buried outside or in unheated areas and the closing valve is located below the frost line. Used in watertight floor construction where an integrally cast flashing flange is required to receive and secure the waterproofing membranes. When hydrant is shut off, water is drained from the casing through the drain hole in the valve housing. The locking cover prevents unauthorized use.

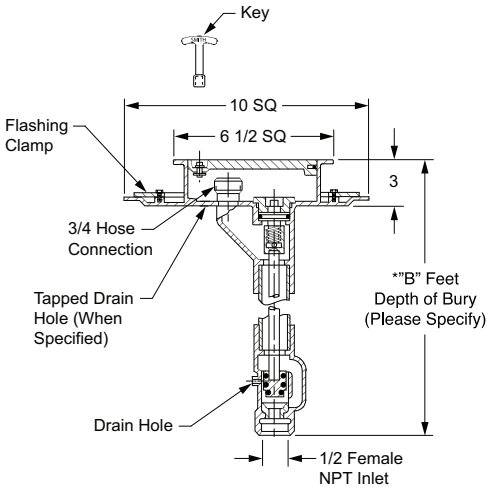

SIDE VIEW

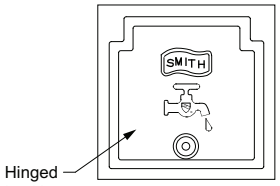

TOP VIEW

Fig. 5810F

OPTIONS:		ADD
-CP	Chrome Plated Box	390.00
-H	3/4" Vacuum Breaker	175.00
-HC1	1" Hose Conn Adaptor	273.00
-LD	Less Drain Hole	N/C
-N	1/8" NPT Drain Hole in Box	240.00
-NB	Nickel Bronze Box	356.00
-NV	1/8" NPT Drain Hole in Hsg	N/C
-PB	Polished Bronze Box	78.00
-W	"Water" on Cover	N/C
		DEDUCT
-LFC	Less Flashing Clamp Deduct	69.00

For Hydrant Parts Repair Kit, refer to Net Parts Price Guide.

NOTES:

1. Recommended Box-out 10 1/2 x 10 1/2".
2. All Jay R. Smith hydrants are manufactured with "NO-LEAD" brazing rings and USDA approved lubricants.
3. The AB1953, California Lead Law, and NSF/ANSI Standard 61-2008 - Drinking Water System Components are not applicable to Jay R. Smith hydrants as they do not convey/dispense water for human consumption through drinking or cooking.
4. Addition of vacuum breaker will not allow draining of the casing. Smith is not responsible for any casings that burst or related incidents if the hydrant is supplied with a vacuum breaker.
5. Hydrant & box will require assembly. Gasket is provided for insertion between the hydrant & box.
6. **FOR IRRIGATION PURPOSES ONLY.**

*B = 9 1/2" when specified (-SAP)

B FEET DEPTH OF BURY	5810-F 3/4" INLET	5811-F 1" INLET	APPROX WEIGHT LBS
-SAP	3,762.00	4,295.00	13
02'	3,762.00	4,295.00	22
03'	3,961.00	4,497.00	26
04'	4,167.00	4,699.00	30
05'	4,371.00	4,898.00	38
06'	4,574.00	5,103.00	44
07'	4,776.00	5,306.00	50
08'	4,980.00	5,510.00	57
09'	5,184.00	5,713.00	64
10'	5,389.00	5,918.00	68

REGULARLY FURNISHED: Bronze Non-Freeze Ground Hydrant with "T" Handle Key, Bronze Hydrant Box with Flashing Flange and Clamp. Inlet Size Furnished as Indicated by Figure Number Selected.

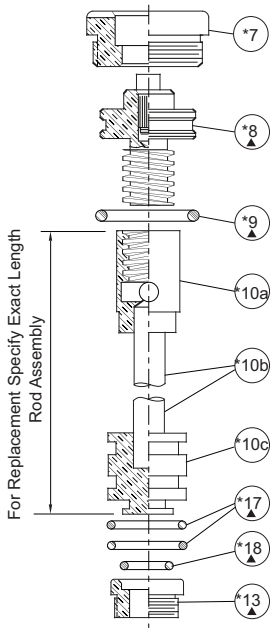

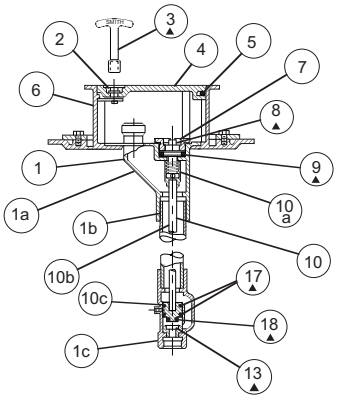

REPLACEMENT PARTS - SPECIFY FIG. NO. WHEN ORDERING			
No.	DESCRIPTION	No.	DESCRIPTION
1	Head/Casing Assembly	8	Operating Screw
1a	Head	9	Operating Screw "O" Ring
1b	Casing	10	Operating Rod Assembly
1c	Valve Housing	10a	Coupling
2	Locking Device	10b	Rod
3	Key	10c	Plunger
4	Cover	13	Removable Seat
5	Hydrant Cover Hinge Pins (2)	17	Plunger "O" Ring
6	Box	18	Plunger "O" Ring
7	Face Nut		

▲ These Replacement Parts Available in HPRK-41

*These parts are accessible from face of hydrant by removing face nut.

MAINTENANCE INSTRUCTIONS

1. Shut off water supply.
2. Remove face nut.
3. Pull stem out for complete access to all working parts.
4. Check all working parts for replacement.
5. Replace complete stem assembly and face nut.

†REGULARLY FURNISHED

FIG. 5812 SER. BRONZE NON-FREEZE GROUND HYDRANT W/CAST IRON BOX W/ 1 1/4", 1 1/2" OR 2" CONNECTIONS

FUNCTION: A Hydrant with a hinged covered box, for positive protection against freezing when buried outside or in unheated areas and the closing valve is located below the frost line. When hydrant is shut off, water is drained from the casing through the drain hole in the valve housing. The locking cover prevents unauthorized use.

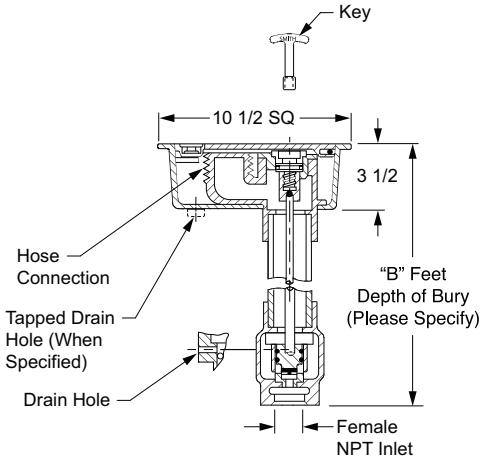

SIDE VIEW

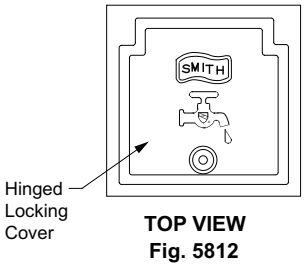

TOP VIEW
Fig. 5812

OPTIONS:

		ADD
-N	1/8" NPT Drain Hole in Box	240.00
-NB	Nickel Bronze Box	748.00
-NV	1/8" NPT Drain Hole in Hsg	N/C
-PB	Polished Bronze Box	422.00
-RB	Rough Bronze Box	240.00
-W	"Water" on Cover	N/C

For Hydrant Parts Repair Kit, refer to Net Parts Price Guide.

NOTES:
1. Recommended Box-out 9 1/2 x 9 1/2".
2. All Jay R. Smith hydrants are manufactured with "NO-LEAD" brazing rings and USDA approved lubricants.
3. The AB1953, California Lead Law, and NSF/ANSI Standard 61-2008 - Drinking Water System Components are not applicable to Jay R. Smith hydrants as they do not convey/dispense water for human consumption through drinking or cooking.
4. **FOR IRRIGATION PURPOSES ONLY.**

B FEET DEPTH OF BURY	5812 1 1/4" INLET	5813 1 1/2" INLET	5814 2" INLET	APPROX WEIGHT LBS
-SAP	11,016.00	12,093.00	14,117.00	23
02'	11,016.00	12,093.00	14,117.00	42
03'	11,382.00	12,551.00	14,715.00	47
04'	11,750.00	13,012.00	15,320.00	52
05'	12,118.00	13,471.00	15,926.00	57
06'	12,482.00	13,935.00	16,532.00	62
07'	12,853.00	14,395.00	17,132.00	67
08'	13,216.00	14,854.00	17,736.00	72

REGULARLY FURNISHED: Bronze Non-Freeze Ground Hydrant with "T" Handle Key, Cast Iron Hydrant Box Inlet and Hose Connection. Size Furnished as Indicated by Figure Number Selected.

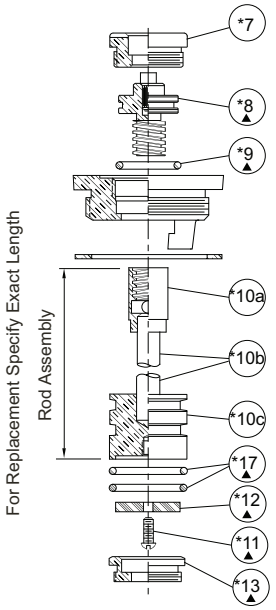

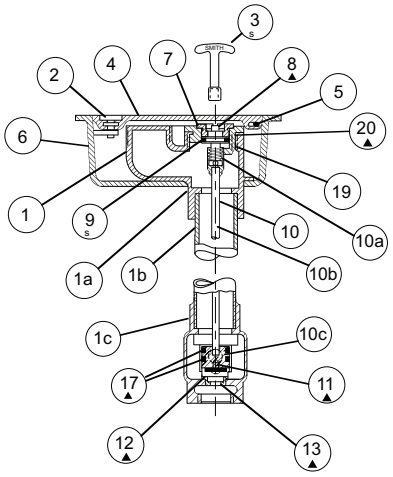

REPLACEMENT PARTS - SPECIFY FIG. NO. WHEN ORDERING			
No.	DESCRIPTION	No.	DESCRIPTION
1	Head/Casing Assembly	9	Operating Screw "O" Ring
1a	Head	10	Operating Rod Assembly
1b	Casing	10a	Coupling
1c	Valve Housing	10b	Rod
2	Locking Device	10c	Plunger
3	Key	11	Washer Screw (No. 10-24)
4	Cover	12	Washer (Neoprene)
5	Hydrant Cover Hinge Pins (2)	13	Removable Seat
6	Box	17	Plunger "O" Ring
7	Face Nut	19	Face Nut Seat
8	Operating Screw	20	Face Nut Seat Gasket

▲These Replacement Parts Available in HPRK-5

*These parts are accessible from face of hydrant by removing face nut

MAINTENANCE INSTRUCTIONS

1. Shut off water supply.
2. Remove face nut.
3. Pull stem out for complete access to all working parts.
4. Check all working parts for replacement.
5. Replace complete stem assembly and face nut.

†REGULARLY FURNISHED

FIG. 5830, 5831 NON-FREEZE GROUND HYDRANT FLUSH BOX HYDRANT WITH LOCKING COVER

FUNCTION: Fig. 5830 or **5831** box hydrant provides water access that is inconspicuous and unobtrusive. The top of the unit is installed flush with the surrounding surface and all working parts are located below grade. The hydrant may be installed in pavement, sod or concrete. The unit is furnished with a hinged, locking lid, which is opened for access to the hose outlet and closed when not in use. A loose key serves to lock and unlock the lid and to operate the hydrant. To provide freeze resistant functionality, the valve is located underground at the specified depth of bury. The hydrant box and lid are iron castings and the bottom connection, valve and hose outlet are solid-brass castings. Field-serviceable parts are easily accessible.

Depth of Bury	Inlet Connection	5830 †Cast Iron
2’	3/4” Male	**POA**
3’	3/4” Male	**POA**
4’	3/4” Male	**POA**
5’	3/4” Male	**POA**
6’	3/4” Male	**POA**

Depth of Bury	Inlet Connection	5831 †Cast Iron
2’	1” Male	**POA**
3’	1” Male	**POA**
4’	1” Male	**POA**
5’	1” Male	**POA**
6’	1” Male	**POA**

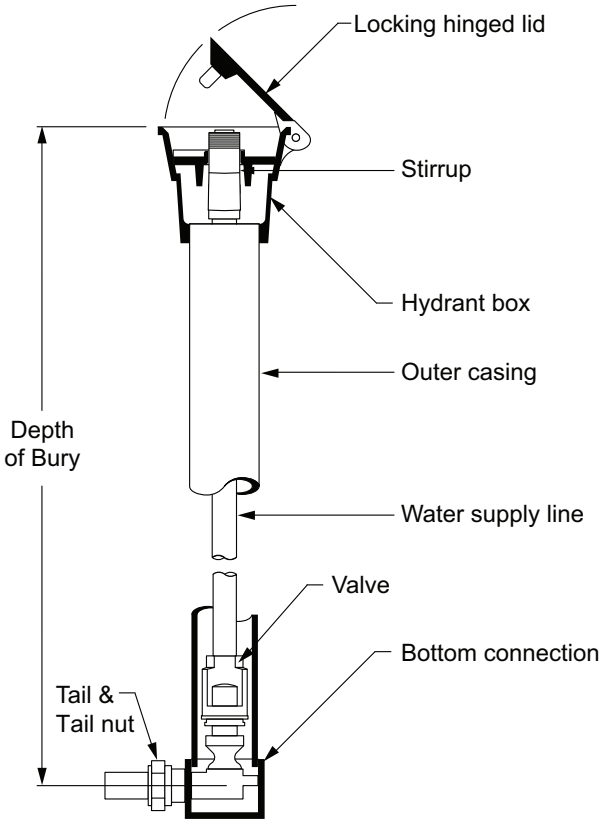

FIG. 5903 NON-FREEZE SANITARY ROOF HYDRANT

FUNCTION: Used on roofs where water is required for window washing, cleaning of condenser coils, cooling towers and other types of roof equipment. Freezing is prevented by the valve housing being located below the roof in a heated or insulated area. The hydrant is engineered to be fully self contained by draining the water from casing after shut-off into the sealed canister.

Depth of Bury	Inlet Connection	5903
2’	3/4” Female	**POA**

ADD FOR:

-H Vacuum Breaker .....**POA**

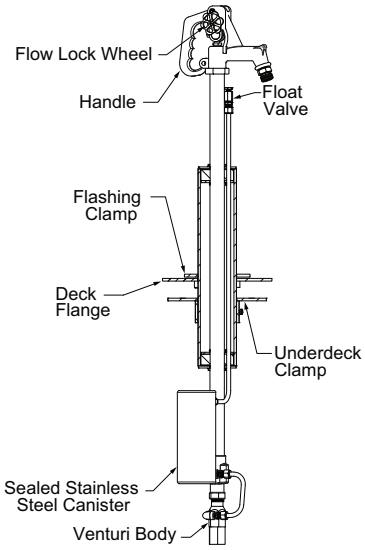

FIG. 5904 NON-FREEZE POST/YARD HYDRANT

FUNCTION: Used where an above ground water outlet is required in areas which are subject to freezing temperatures and where water is not allowed to drain from the casing into the ground. Freezing is prevented by burying the valve housing below the frost line and draining water from the casing after shut-off into the sealed canister. The hydrant is engineered to be fully self contained and easily serviced in the field.

Depth of Bury	Inlet Connection	5904
12”	3/4” Female	**POA**
24”	3/4” Female	**POA**
36”	3/4” Female	**POA**
48”	3/4” Female	**POA**
60”	3/4” Female	**POA**
72”	3/4” Female	**POA**

ADD FOR:

-H Vacuum Breaker .....**POA**

FIG. 5906 NON-FREEZE ROOF HYDRANT

FUNCTION: Provides water availability for window washing, cleaning of condenser coils, cooling towers and other types of roof equipment. Valve body of hydrant is drilled and tapped with 1/8” drain hole which must be piped to a drain location.

Depth of Bury	Inlet Connection	5906
2’	3/4” Female	POA

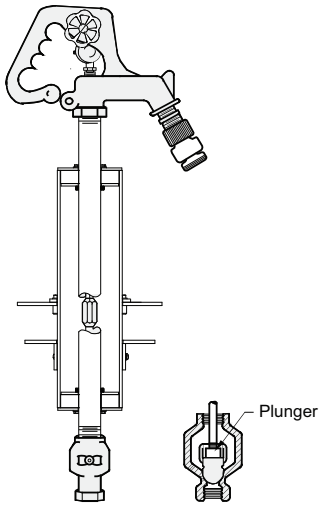

FIG. 5907 NON-FREEZE ROOF HYDRANT

FUNCTION: Provides water availability for window washing, cleaning of condenser coils, cooling towers and other types of roof equipment. Valve body of hydrant is drilled and tapped with 1/8” drain hole which must be piped to a drain location.The check valve prevents backflow due to low head back-pressure.

Depth of Bury	Inlet Connection	w/Check Valve 5907
2’	3/4” Female	POA

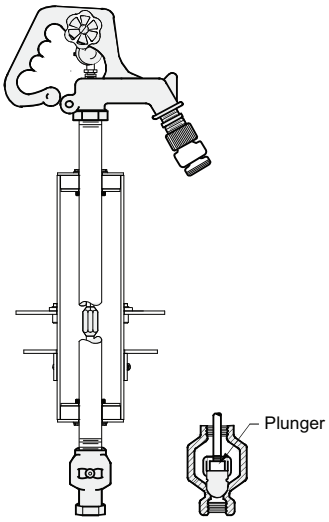

FIG. 5909 NON-FREEZE POST HYDRANT WITH GALVANIZED CASING

FUNCTION: Used where an above ground water outlet is required in areas which are subject to freezing temperatures. Freezing is prevented by burying the valve housing below the frost line and draining water from the casing after shut-off.

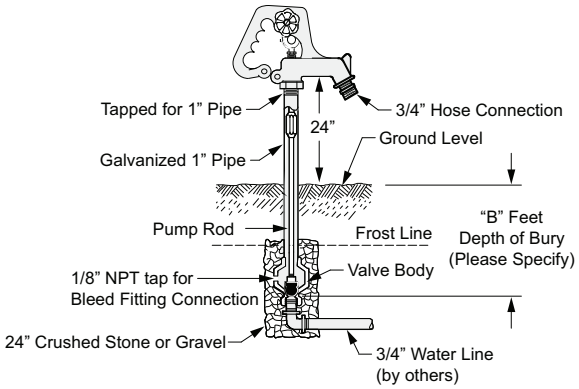

OPTIONS:

		ADD
-H	Vacuum Breaker	**175.00**
-NV	1/8" NPT Drain Hole in Valve Housing	**N/C**

NOTES:

1. Addition of vacuum breaker will not allow draining of the casing. Smith is not responsible for any casings that burst or related incidents if the hydrant is supplied with a vacuum breaker.
2. **FOR IRRIGATION PURPOSES ONLY.**

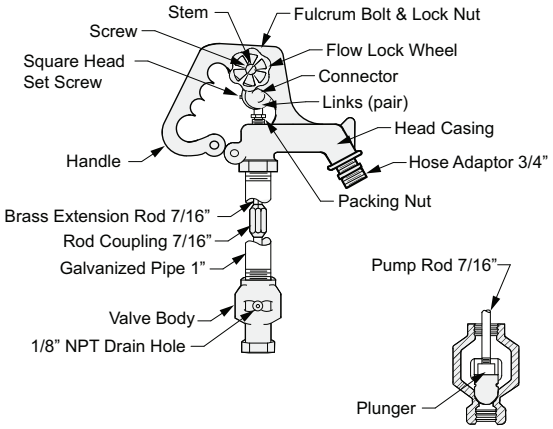

Fig. 5909

B FEET DEPTH OF BURY	3/4" INLET	APPROX WEIGHT LBS
01'	**1,414.00**	10
02'	**1,493.00**	14
03'	**1,571.00**	18
04'	**1,658.00**	22
05'	**1,734.00**	26
06'	**1,811.00**	30

REGULARLY FURNISHED:

Non-Freeze Post Hydrant with Galvanized Casing and Adjustable Flow Wheel Lock Handle.

†REGULARLY FURNISHED

FIG. 5910 SER. NON-FREEZE POST HYDRANT WITH BRONZE CASING

FUNCTION: Used where an above ground water outlet is required in areas which are subject to freezing temperatures. Freezing is prevented by burying the valve housing below the frost line and draining water from the casing after shut-off.

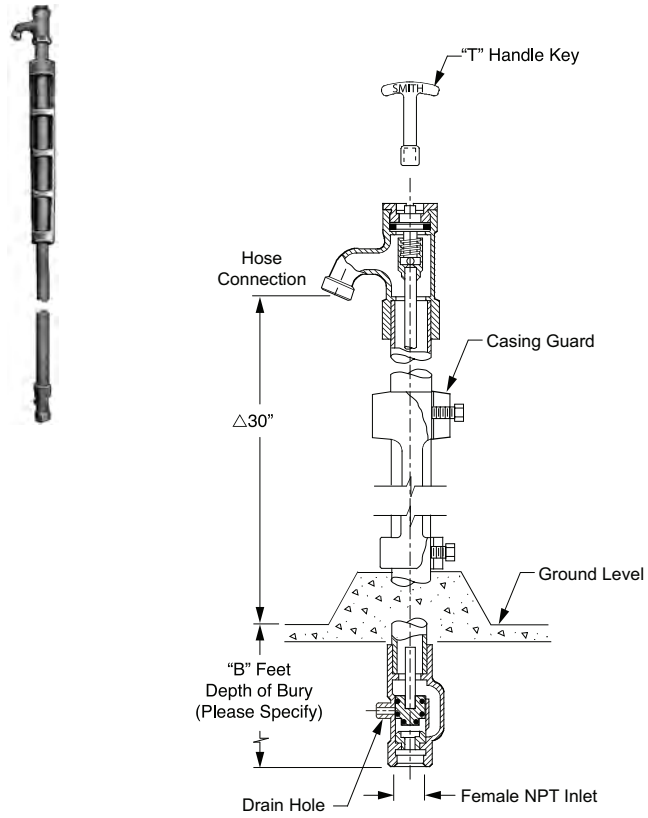

Fig. 5910

OPTIONS: **ADD**

-AG	Aluminum Casing Guard	**N/C**
-H	3/4" Vacuum Breaker (5910 Only)	**175.00**
-NV	1/8" NPT Drain Hole in Housing	**N/C**
-WH	Secured Wheel Handle	**370.00**

For Hydrant Parts Repair Kit, refer to Net Parts Price Guide.

△ Regularly furnished (unless otherwise specified)

NOTES:

1. All Jay R. Smith hydrants are manufactured with "NO-LEAD" brazing rings and USDA approved lubricants.
2. The AB1953, California Lead Law, and NSF/ANSI Standard 61-2008 - Drinking Water System Components are not applicable to Jay R. Smith hydrants as they do not convey/dispense water for human consumption through drinking or cooking.
3. **FOR IRRIGATION PURPOSES ONLY.**

Addition of vacuum breaker will not allow draining of the casing. Smith is not responsible for any casings that burst or related incidents if the hydrant is supplied with a vacuum breaker.

B FEET DEPTH OF BURY	5910 3/4" INLET	5911 1" INLET	APPROX WEIGHT LBS
02'	**2,593.00**	**3,511.00**	25
03'	**2,810.00**	**3,732.00**	29
04'	**3,030.00**	**3,954.00**	33
05'	**3,254.00**	**4,172.00**	37
06'	**3,473.00**	**4,395.00**	41
07'	**3,694.00**	**4,611.00**	45
08'	**3,909.00**	**4,832.00**	49

REGULARLY FURNISHED: Bronze Non-Freeze Post Hydrant with Cast Iron Casing Guard, and "T" Handle Key. Inlet and Hose Connection Size Furnished as Indicated by Figure Number Selected.

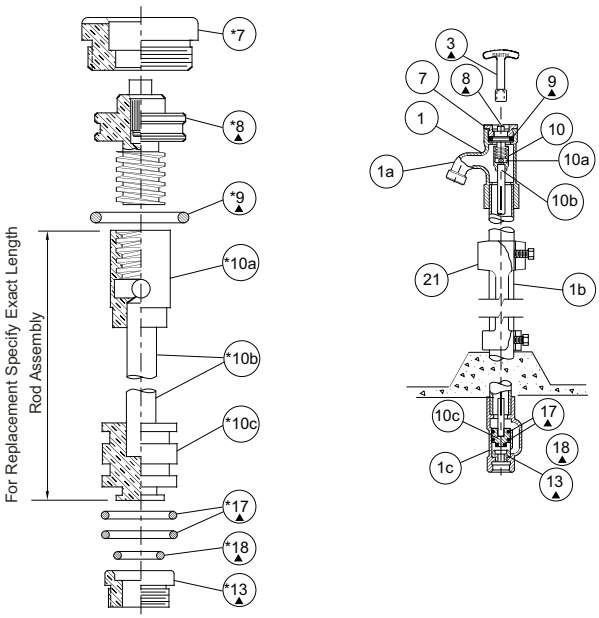

REPLACEMENT PARTS LIST-SPECIFY FIGURE NO. WHEN ORDERING			
No.	DESCRIPTION	No.	DESCRIPTION
1	Head/Casing Assembly	10	Operating Rod Assembly
1a	Head	10a	Coupling
1b	Casing	10b	Rod
1c	Valve Housing	10c	Plunger
3	Key	13	Removable Seat
7	Face Nut	17	Plunger "O" Ring
8	Operating Screw	18	Plunger "O" Ring
9	Operating Screw "O" Ring	21	Casing Guard

▲ These replacemant parts available in HPRK-41

*These parts are accessible from face of hydrant by removing face nut

MAINTENANCE INSTRUCTIONS

1. Shut off water supply.
2. Remove face nut.
3. Pull stem out for complete access to all working parts
4. Check all working parts for replacement.
5. Replace complete stem assembly and face nut.

†REGULARLY FURNISHED

FIG. 5912 SER. NON-FREEZE POST HYDRANT W/CAST IRON CASING GUARD W/1 1/4", 1 1/2" OR 2" CONNECTIONS

FUNCTION: Used where an above ground water outlet is required in areas which are subject to freezing temperatures. Freezing is prevented by burying the valve housing below the frost line and draining water from the casing after shut-off.

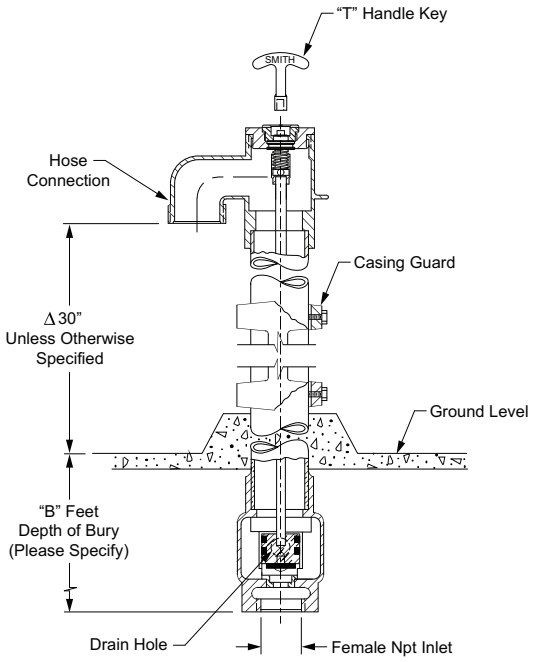

Fig. 5912

OPTIONS:		ADD
-AG	Aluminum Casing Guard	**N/C**
-NV	1/8" Drain Hole in Housing	**N/C**
-WH	Secured Wheel Handle	**370.00**

For Hydrant Parts Repair Kit, refer to Net Parts Price Guide.

NOTES:

1. All Jay R. Smith hydrants are manufactured with "NO-LEAD" brazing rings and USDA approved lubricants.
2. The AB1953, California Lead Law, and NSF/ANSI Standard 61-2008 - Drinking Water System Components are not applicable to Jay R. Smith hydrants as they do not convey/dispense water for human consumption through drinking or cooking.
3. **FOR IRRIGATION PURPOSES ONLY.**

Δ Regularly furnished (unless otherwise specified)

B FEET DEPTH OF BURY	5912 1 1/4" INLET	5913 1 1/2" INLET	5914 2" INLET	APPROX WEIGHT LBS
-SAP	**6,232.00**	**8,690.00**	**10,799.00**	30
02'	**6,232.00**	**8,690.00**	**10,799.00**	57
03'	**6,873.00**	**9,210.00**	**11,335.00**	62
04'	**7,514.00**	**9,737.00**	**11,866.00**	67
05'	**8,162.00**	**10,261.00**	**12,399.00**	74
06'	**8,802.00**	**10,783.00**	**12,934.00**	77
07'	**9,449.00**	**11,304.00**	**13,469.00**	82
08'	**10,089.00**	**11,829.00**	**14,001.00**	87

REGULARLY FURNISHED: Bronze Non-freeze Post Hydrant with Cast Iron Casing Guard, and "T" Handle Key. Inlet and Hose Connection Size Furnished as Indicated by Figure Number Selected.

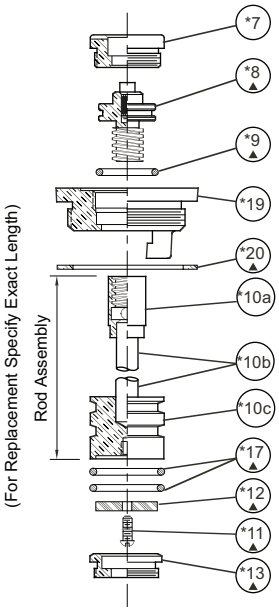

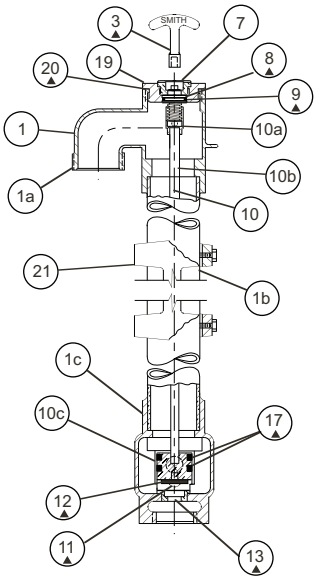

REPLACEMENT PARTS LIST - SPECIFY FIGURE NO. WHEN ORDERING			
No.	**DESCRIPTION**	**No.**	**DESCRIPTION**
1	Head/Casing Assembly	10b	Rod
1a	Head	10c	Plunger
1b	Casing	11	Washer Screw (No. 10-24
1c	Valve Housing	12	Washer (Neoprene)
3	Key	13	Removable Seat
7	Face Nut	17	Plunger "O" Ring
8	Operating Screw	19	Face Nut Seat
9	Operating Screw "O" Ring	20	Face Nut Seat Gasket
10	Operating Rod Assembly	21	Casing Guard
10a	Coupling		

▲These Replacement Parts Available in HPRK -5

* These parts are accessible from face of hydrant by removing face nut.

MAINTENANCE INSTRUCTIONS

1. Shut off water supply.
2. Remove face nut.
3. Pull stem out for complete access to all working parts.
4. Check all working parts for replacement.
5. Replace complete stem assembly and face nut.

†REGULARLY FURNISHED

FIG. 5950 SER. NON-FREEZE BOX TYPE GROUND HYDRANT W/HEAVY DUTY COVER

FUNCTION: Hydrant with heavy duty hinged cover box, particularly suitable for traffic areas which require a flush with ground non-freeze hydrant. Ideal for parking decks, outside exhibition areas, etc. The closing valve is located below the frost line. When hydrant is shut off water is drained from the casing through the drain hole in the valve housing.

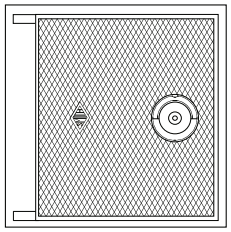

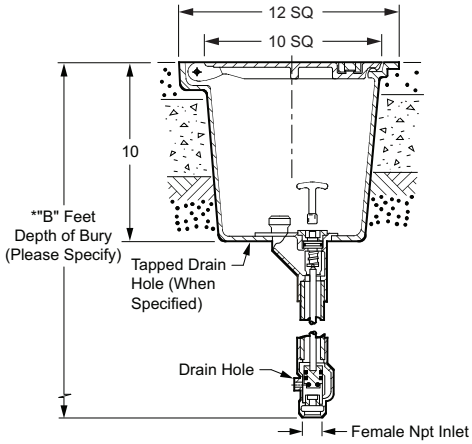

Fig. 5950

OPTIONS:

		ADD
-HC1	1" Hose Connection Adaptor	273.00
-N	1/8" Drain Hole in Box	240.00
-NB	Nickel Bronze Top	3,866.00
-NV	1/8" Drain Hole in Housing	N/C
-PB	Polished Bronze Top	3,231.00
-RB	Rough Bronze Top	2,581.00
-W	"Water" on Cover	195.00

For Hydrant Parts Repair Kit, refer to Net Parts Price Guide.

NOTES:

1. All Jay R. Smith hydrants are manufactured with "NO-LEAD" brazing rings and USDA approved lubricants.
2. Addition of vacuum breaker will not allow draining of the casing. Smith is not responsible for any casings that burst or related incidents if the hydrant is supplied with a vacuum breaker.
3. When installed in parking decks, garages or similar applications subjected to vehicle traffic, hydrant shall be located in a non - traffic location.
4. The AB1953, California Lead Law, and NSF/ANSI Standard 61-2008 - Drinking Water System Components are not applicable to Jay R. Smith hydrants as they do not convey/dispense water for human consumption through drinking or cooking.
5. **FOR IRRIGATION PURPOSES ONLY.**

B FEET DEPTH OF BURY	5950 3/4" INLET	5951 1" INLET	APPROX WEIGHT LBS
-SAP	4,893.00	5,971.00	81
02'	4,893.00	5,971.00	81
03'	5,098.00	6,170.00	85
04'	5,301.00	6,375.00	93
05'	5,502.00	6,580.00	97
06'	5,709.00	6,781.00	101
07'	5,911.00	6,990.00	105
08'	6,114.00	7,192.00	109

REGULARLY FURNISHED: Bronze Hydrant with Bronze Casing. "T" Handle Key and Cast Iron Box with Ductile Iron Cover with Lifting Device.

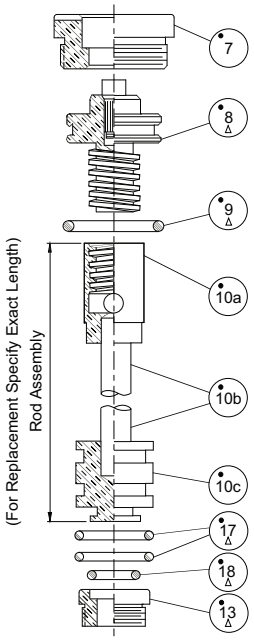

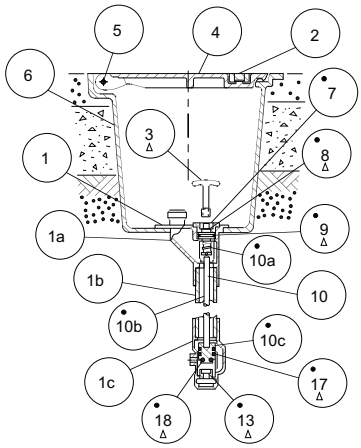

REPLACEMENT PARTS LIST-SPECIFY FIGURE NO. WHEN ORDERING			
No.	DESCRIPTION	No.	DESCRIPTION
1	Head/Casing Assembly	8	Operating Screw
1a	Head	9	Operating Screw "O" Ring
1b	Casing	10	Operating Rod Assembly
1c	Valve Housing	10a	Coupling
2	Lifting Device	10b	Rod
3	Key	10c	Plunger
4	Cover	13	Removable Seat
5	Hydrant Cover Hinge Pins(2)	17	Plunger "O" Ring
6	Box	18	Plunger "O" Ring
7	Face Nut		

Δ These replacement parts available in HPRK-41.

• These parts are accessible from face of hydrant by removing face nut.

MAINTENANCE INSTRUCTIONS

1. Shut off water supply.
2. Remove face nut.
3. Pull stem out for complete access to all working parts.
4. Check all working parts for replacement.
5. Replace complete stem assembly and face nut.

†REGULARLY FURNISHED

FIG. 5960, 5961 NON-FREEZE COMPRESSION TYPE POST HYDRANT

FUNCTION: **Fig. 5960 or 5961** delivers year-round service outside or in unheated buildings. To provide freeze resistant functionality, the control valve is located below the frost line. Turning the handle raises or lowers the internal supply-line assembly, controlling the valve. Hydrant must be operated fully "on". Constructed of heavy red brass, premium-quality gray iron and steel, **Fig. 5960 or 5961** is designed for trouble-free reliability and easy maintenance.

Depth of Bury	Inlet Connection	5960
2'	3/4"	POA
3'	3/4"	POA
4'	3/4"	POA
5'	3/4"	POA
6'	3/4"	POA

ADD FOR:
-BFH Double Ball Check Valve Drain .....**POA**

Depth of Bury	Inlet Connection	5961
2'	1"	POA
3'	1"	POA
4'	1"	POA
5'	1"	POA
6'	1"	POA

ADD FOR:
-BFH Double Ball Check Valve Drain .....**POA**

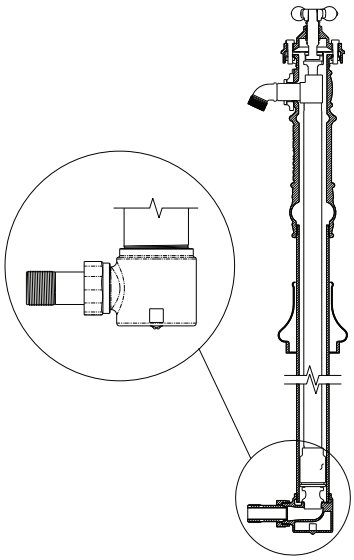

FIG. 5963 NON-FREEZE COMPRESSION TYPE POST HYDRANT

FUNCTION: **Fig. 5963** delivers year-round service outside or in unheated buildings. To provide freeze resistant functionality, the control valve is located below the frost line. Turning the handle raises or lowers the internal supply-line assembly, controlling the valve. Hydrant must be operated fully "on". Constructed of heavy brass, premium-quality gray iron and steel, the **Fig. 5963** is designed for trouble-free reliability and easy maintenance.

Depth of Bury	Inlet Connection	5963
2'	1 1/2"	POA
3'	1 1/2"	POA
4'	1 1/2"	POA
5'	1 1/2"	POA
6'	1 1/2"	POA

Depth of Bury	Inlet Connection	5963
2'	2"	POA
3'	2"	POA
4'	2"	POA
5'	2"	POA
6'	2"	POA

ADD FOR:
-BFH Double Ball Check Valve Drain .....**POA**

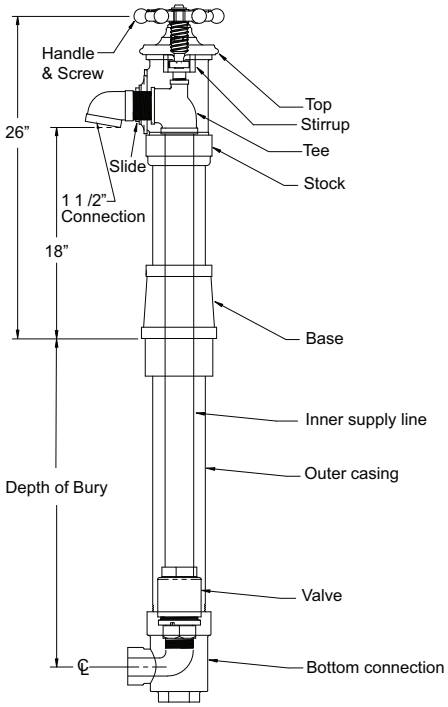

FIG. 5964 NON-FREEZE COMPRESSION TYPE SELF-CLOSING HYDRANT WITH OPERATING LEVER

FUNCTION: Fig. 5964 delivers year-round service outside or in unheated buildings. To provide freeze resistant functionality, the control valve is located below the frost line. Turning the handle raises or lowers the internal supply-line assembly, controlling the valve. Hydrant must be operated fully "on". Constructed of heavy brass, premium-quality gray iron and steel, the **Fig. 5964** is designed for trouble-free reliability and easy maintenance.

Depth of Bury	Inlet Connection	5964
2'	2"	POA
3'	2"	POA
4'	2"	POA
5'	2"	POA
6'	2"	POA

ADD FOR:

-BFH Double Ball Check Valve Drain.....**POA**

-WH Wheel Handle .....**POA**

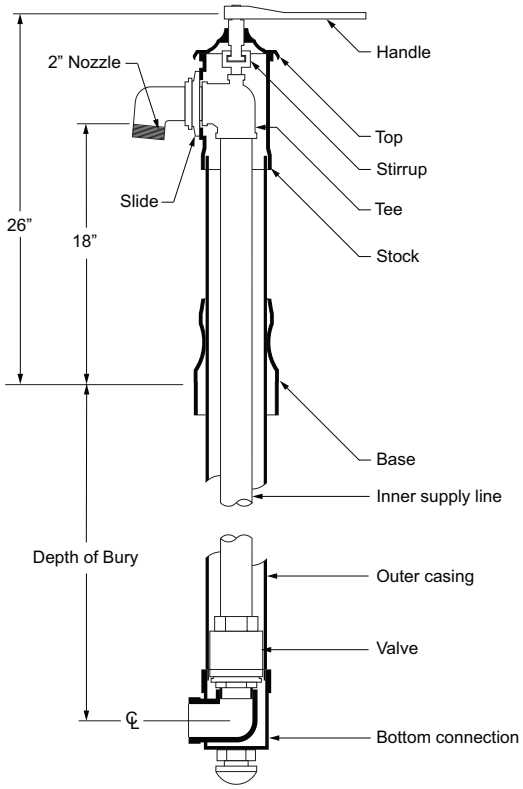

FIG. 5965, 5966 NON-FREEZE COMPRESSION TYPE SELF-CLOSING HYDRANT WITH OPERATING LEVER

FUNCTION: Fig. 5965 or 5966 delivers year-round service outside or in unheated buildings. To provide freeze resistant functionality, the control valve is located below the frost line. The spring loaded handle raises or lowers the internal supply line assembly, controlling the valve. The internal supply column is evacuated through drainage ports in the bottom. The hydrant must be operated fully "on".

Depth of Bury	Inlet Connection	5965
2"	3/4"	POA
3'	3/4"	POA
4'	3/4"	POA
5'	3/4"	POA
6'	3/4"	POA

ADD FOR:

-BFH Double Ball Check Valve Drain.....**POA**

Depth of Bury	Inlet Connection	5966
2'	1"	POA
3'	1"	POA
4'	1"	POA
5'	1"	POA
6'	1"	POA

ADD FOR

-BFH Double Ball Check Valve Drain.....**POA**

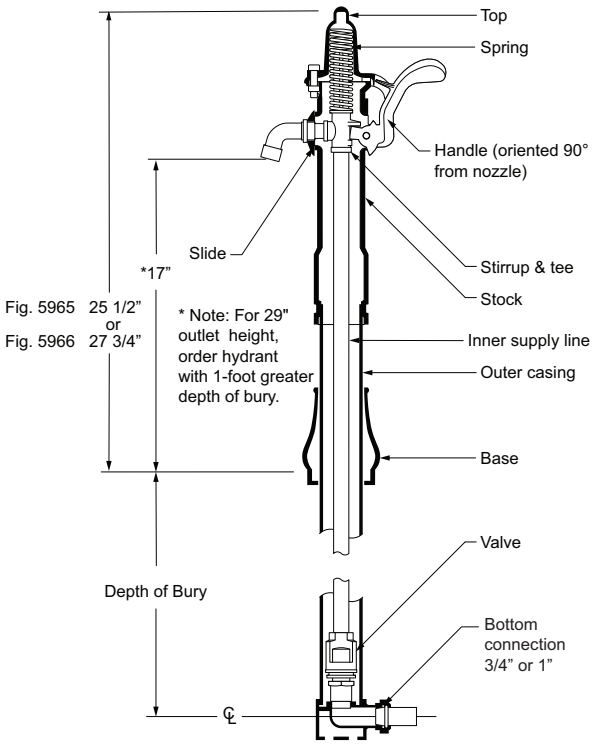

HYDRANT PARTS REPAIR KITS (HPRK) CROSS REFERENCED CHRONOLOGICALLY

FOR PRICING, SEE NET PARTS PRICE GUIDE

FIG. NO.	AFTER 8/84	1/79-8/84	BEFORE 1/79
5509	HPRK-2	HPRK-2	HPRK-21
5509QT	HPRK-7	None	None
5510	HPRK-11	HPRK-11	HPRK-12
5511	HPRK-11	HPRK-11	HPRK-12
5515	HPRK-15	None	None
5517	HPRK-19	None	None
5518	HPRK-18	None	None
5519	HPRK-19	None	None
5525	HPRK-6	None	None
5526	HPRK-6	None	None
5560	HPRK-11	HPRK-11	HPRK-12
*5560QT	HPRK-7	None	None
*5561QT	HPRK-7	None	None
5607	HPRK-3	None	None
5608	HPRK-3	None	None
5609	HPRK-2	HPRK-21	None
5609QT	HPRK-7	None	None
5610	HPRK-11	HPRK-11	HPRK-12
5611	HPRK-11	HPRK-11	HPRK-12
5615	HPRK-15	None	None
5618	HPRK-18	None	None
5619	HPRK-19	None	None
5625	HPRK-6	None	None
5626	HPRK-6	None	None
*5660QT	HPRK-7	None	None
*5661QT	HPRK-7	None	None
5709	HPRK-3	None	None
FIG. NO.	AFTER 8/84	1/79-8/84	BEFORE 1/79
5730	HPRK-3	None	None
5731	HPRK-3	None	None
5760	HPRK-3	None	None
5761	HPRK-3	None	None
5810	HPRK-41	HPRK-41	HPRK-42
5810F	HPRK-41	HPRK-41	HPRK-42
5811	HPRK-41	HPRK-41	HPRK-42
5811F	HPRK-41	HPRK-41	HPRK-42
5812	HPRK-5	HPRK-5	HPRK-51
5813	HPRK-5	HPRK-5	HPRK-51
5814	HPRK-5	HPRK-5	HPRK-51
5903	HPRK-9	None	None
5904	HPRK-9	None	None
5906	HPRK-9	None	None
5907	HPRK-9	None	None
5909	HPRK-9	None	HPRK-51
5910	HPRK-41	HPRK-41	HPRK-42
5911	HPRK-41	HPRK-41	HPRK-42
5912	HPRK-5	HPRK-5	HPRK-51
5913	HPRK-5	HPRK-5	HPRK-51
5914	HPRK-5	HPRK-5	HPRK-51
5950	HPRK-41	HPRK-41	HPRK-42
5951	HPRK-41	HPRK-41	HPRK-42

***For the 5560QT and 5561QT, two HPRK-7's are required.**

†REGULARLY FURNISHED

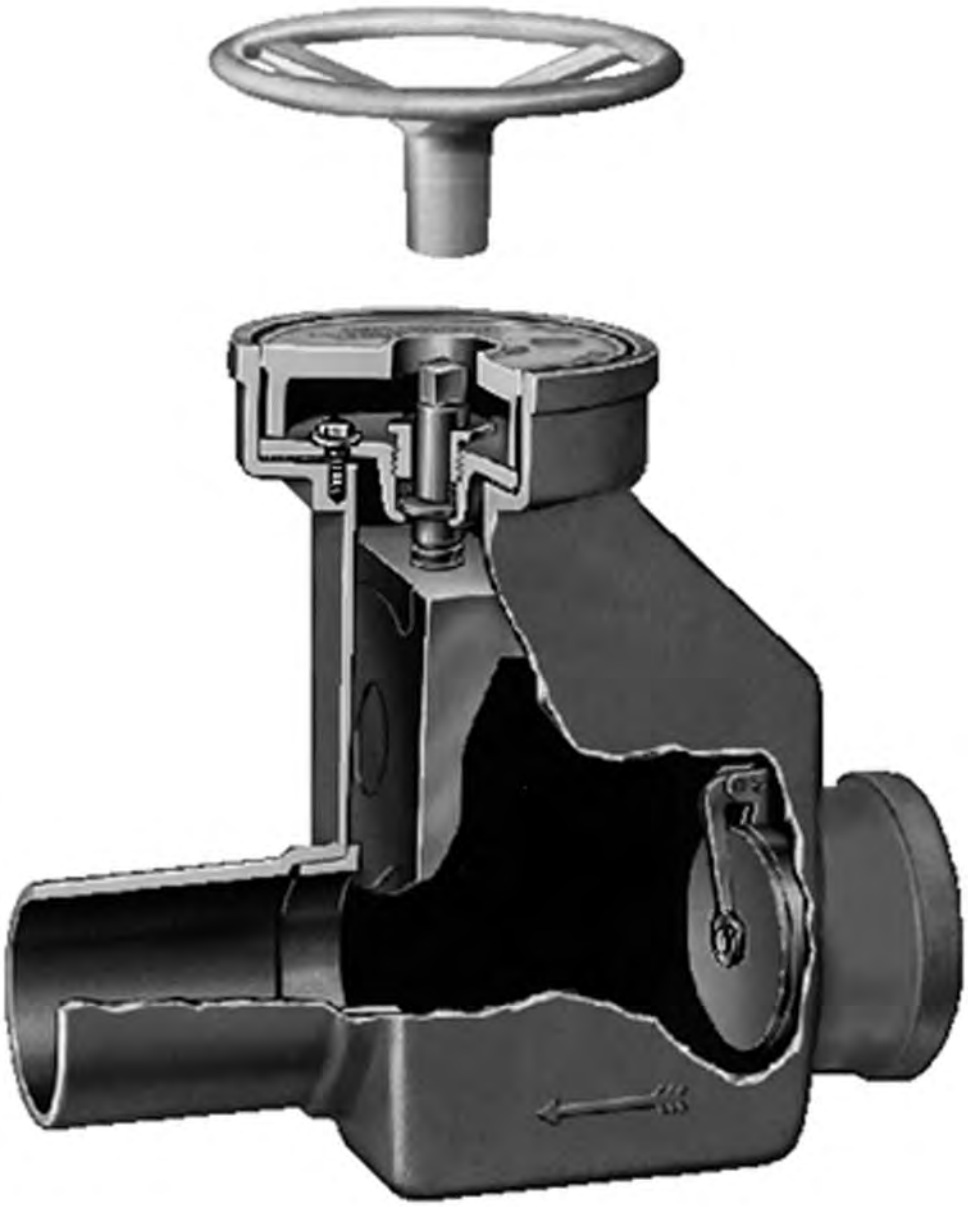

ORDERING GUIDELINES

7000 SERIES

After identifying the proper options required to meet the engineering specification, place order as shown below:

Examples:

7150S04 (-G)

- Figure No. — 7150
- Type of Outlet (Spigot) — S
- Pipe Size (Inches) — 04
- Galvanized Cast Iron — (-G)

*All variation suffixes are to be shown in parentheses.

BACKWATER VALVES TECHNICAL DATA

PROTECTION AGAINST BACKWATER SURGES

- EXCESSIVE RAINFALL
- TIDEWATER CONDITIONS
- INADEQUATE CAPACITY

NOTE: These conditions can cause damaging backflow flooding into basements and low areas, as well as damaging merchandise and equipment backflow can even undermine the building construction. Another important threat is the health hazard created by contaminated waste water. Avoid the inconveniences — install SMITH Backwater Valves which offer protection against backwater surges. Backflow is prevented when valve is not obstructed by debris or sludge. Use for gravity flow only, not for pressurized applications.

Extension To Finished Floor Level - Where it is necessary to extend the valve access cover to finished floor level, the Smith 7022 should be specified. The extension is made by using soil pipe cut to the desired length.

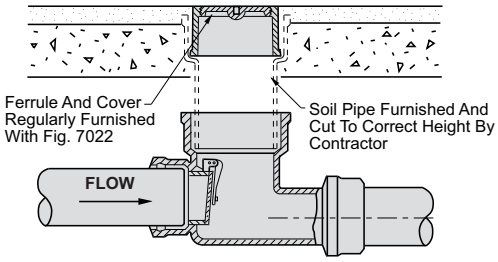

Fig. 7022

Installation At Sewer Line Terminals - The Fig. 7070 terminal valve provides backwater protection at the terminal where storm or sanitary sewers discharge into catch basins, manholes or drainage lagoons.

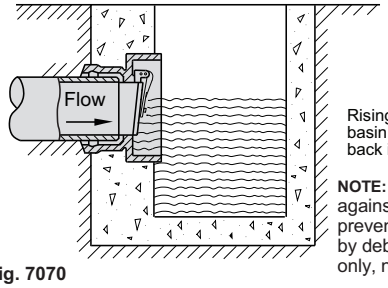

NOTE: These valves offer protection against backwater surges. Backflow is prevented when valve is not obstructed by debris or sludge. Use for gravity flow only, not for pressurized applications.

Fig. 7070

IN-LINE MANUAL SHUT-OFF GATE VALVE

Fig. 7150 Series

Fig. 7150 In-line Manual Shut-Off Backwater Valve may be installed in new or existing sewer lines. Smith Engineers, realizing that most installations are made in existing lines where line pitch is already established, have designed an "In-Line" type manual shut-off valve. There is no drop in elevation from inlet to outlet, permitting the valve to be inserted in an existing line without significantly disturbing the pitch. The "In-Line" feature is particularly useful where existing sewer line pitch is at a minimum.

NOTE: During periods when manual shut-off valve is closed, use of building plumbing fixtures and drains must be avoided.

NOTE: For additional backwater valve technical or application data go to our web site at www.jrsmith.com or contact your local Jay R. Smith Representative.

Cut made long enough to expose hub on outlet side, and with enough space on inlet side for insertable fitting.

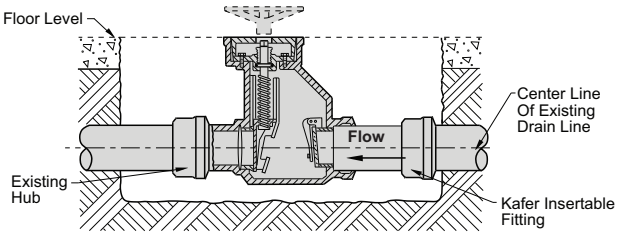

INSTALLATION IN EXISTING SEWER LINE

FIG. 7000 PIT STYLE BACKWATER VALVE

FUNCTION: Used at the base of side walls in pits, where low elevation requires a vertical inlet grate and side outlet roughing. Backwater valve provides protection against backflow which could damage equipment in pit.

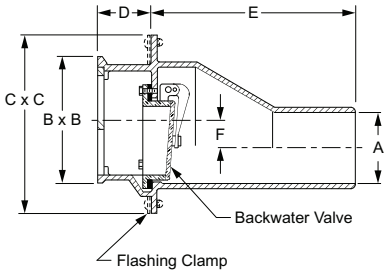

OPTIONS:

		03, 04"	05, 06"	ADD 08"
-C	Flashing Clamp	**339.00**	**339.00**	**607.00**
-G	Galvanized CI	**847.00**	**847.00**	**1,371.00**
-U	Vandal Proof Screws	**188.00**	**188.00**	**188.00**

Stainless Steel ..... **Specify Fig. 9790**

A OUTLET SIZE	B X B FACE SIZE	C X C	D	E	F	FREE AREA SQ. IN.	†DUCO CI	DUCO CI PB FACE	DUCO CI NB FACE	APPROX. WEIGHT LBS	ADD FOR CP FACE
03, 04"	6 3/4" x 9 1/2"	10 1/4" x 12"	3"	11 1/4"	2 3/4"	15	**2,357.00**	**3,101.00**	**3,467.00**	43	**1,456.00**
05, 06"	7 3/4" x 11"	9 3/4" x 13"	4"	13 1/4"	1 1/4"	24 1/2	**3,540.00**	**4,284.00**	**4,650.00**	70	**1,905.00**
08"	12 1/2" x 14 1/2"	17 1/4" x 19"	4"	22"	4 3/4"	56	**6,887.00**	**9,053.00**	**9,281.00**	150	**3,323.00**

REGULARLY FURNISHED: Duco Cast Iron Body with Backwater Valve and Cast Iron Secured Grate.

NOTE: These valves offer protection against backwater surges. Backflow is prevented when valve is not obstructed by debris or sludge. Use for gravity flow only, not for pressurized applications.

FIG. 7012 SER. SEWER VALVE W/BOLTED COVER (7012) OR THREADED COVER (7022)

FUNCTION: Used in main or branch sewer lines to protect basements and low areas against backflow from the street sewers. Valve design permits access to backwater valve assembly, for servicing or cleaning, through a "full opening" bolted cover or threaded cover.

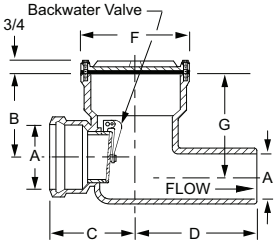

Fig. 7012
Bolted Cover

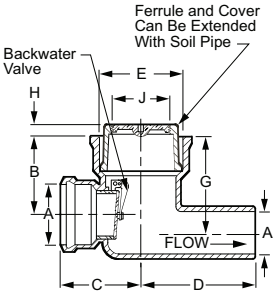

Fig. 7022
Threaded Cover

OUTLET VARIATIONS (Specify type of outlet and pipe size in inches.)

Outlet Type	Outlet Designation Outlet Type/Pipe Size	ADD
Y	No-Hub Inlet and Outlet	
	Y02, Y03, Y04, Y05, Y06, Y08	**N/C**

OPTIONS: **ADD**

-G Galvanized Cast Iron
- 02, 03, 04" **675.00**
- 05, 06" **1,132.00**
- 08 ..... **2,023.00**

Stainless Steel (Fig. 7012 Only) ..... **Specify Fig. 9795**

NOTE: These valves offer protection against backwater surges. Backflow is prevented when valve is not obstructed by debris or sludge. Use for gravity flow only, not for pressurized applications.

A* OUTLET SIZE	B	C	D	E SIZE	F DIA	G	H	J SIZE	7012 DUCO CI BRZ VALVE	7022 DUCO CI BRZ VALVE	APPROX. WEIGHT LBS
02"	4 1/2"	5"	7"	4"	6 1/2"	6"	1 1/4"	3 1/2"	**1,669.00**	**1,669.00**	22
03"	6 1/4"	5 3/4"	9"	5"	7 1/2"	7 1/2"	1 1/2"	4"	**2,618.00**	**2,618.00**	29
04"	6 1/2"	6 1/2"	9 1/2"	6"	8 1/2"	8"	1"	5"	**3,222.00**	**3,222.00**	41
05"	7"	7 3/4"	10 1/2"	8"	10 3/4"	8 3/4"	1"	6"	**3,873.00**	**3,873.00**	54
06"	8"	7 3/4"	11 1/2"	8"	10 3/4"	9 3/4"	1"	6"	**4,625.00**	**4,625.00**	75
08"	9 1/2"	9 1/2"	12 1/2"	10"	13"	11 3/4"	1"	6"	**6,501.00**	**6,501.00**	100

REGULARLY FURNISHED: Duco Cast Iron Body with Bronze Backwater Valve. Cover as Indicated by Figure Number Selected.

*Sized for Service Weight and/or No-Hub.

†REGULARLY FURNISHED

BACKWATER VALVES

FIG. 7070 TERMINAL VALVE

FUNCTION: Used at the end of sewer lines, which discharge into manholes, catch basins, drainage lagoons and seawalls to prevent backflow into areas which are to be drained.

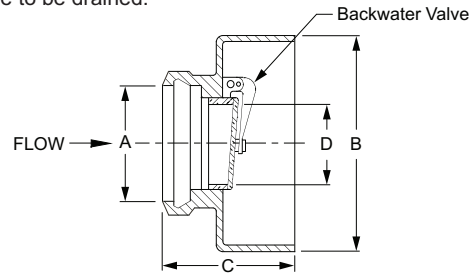

Outlet Type	Outlet Designation Outlet Type/Pipe Size	ADD
C	Inside Caulk	N/C
Y	No-Hub Outlet	N/C

A* OUTLET SIZE	B DIA	C	D	†DUCO CI BRZ VALVE	GALV CI BRZ VALVE	APPROX. WEIGHT LBS
02"	6 1/4"	5 1/4"	1 3/4"	**694.00**	**1,087.00**	10
03"	8"	5 1/2"	2 3/4"	**694.00**	**1,087.00**	12
04"	9"	5 3/4"	3 3/4"	**1,018.00**	**1,411.00**	15
05"	11 1/2"	6"	4 1/2"	**2,421.00**	**2,976.00**	20
06"	11 1/2"	6"	5 3/4"	**2,900.00**	**3,455.00**	28
08"	13 1/2"	6 3/4"	8"	**3,527.00**	**4,678.00**	42
10"	15 3/4"	7 3/4"	10"	**10,610.00**	**11,761.00**	58

REGULARLY FURNISHED: Duco Cast Iron Body with Backwater Valve.

NOTE: These valves offer protection against backwater surges. Backflow is prevented when valve is not obstructed by debris or sludge. Use for gravity flow only, not for pressurized applications.

NOTE: B.W.V. flapper set at factory to hang in closed position. Pin can be moved to permit flapper to hang open 1/4" to permit air circulation.

NOTE: 2-4" sizes furnished with Delrin Backed Neoprene flapper. All other sizes furnished with bronze flapper.

FIG. 7080 SER. DRAIN OUTLET VALVE W/SPIGOT (7080) OR THREADED (7082) OUTLET

FUNCTION: Installed as independent backwater protection for bottom outlet floor drains to prevent damaging backflow from entering room where floor drain is installed.

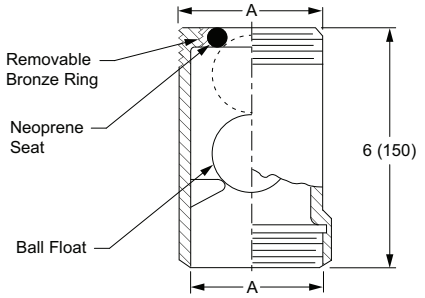

Outlet Type	Outlet Designation Outlet Type/Pipe Size	ADD
Y	No-Hub Outlet (7080 Only)	N/C

OPTIONS:		ADD
-BB	All Bronze	POA

NOTE: These valves offer protection against backwater surges. Backflow is prevented when valve is not obstructed by debris or sludge. Use for gravity flow only, not for pressurized applications.

A OUTLET SIZE	†DUCO CI	GALV CI	APPROX. WEIGHT LBS
02"	**745.00**	**882.00**	3
03, 04"	**745.00**	**882.00**	6
05, 06"	**1,541.00**	**1,886.00**	23

REGULARLY FURNISHED: Duco Cast Iron Body with Ball Float Backwater Valve.

FIG. 7097 DRAIN TILE SUMP WITH 4" TILE INLET & SPIGOT OUTLET

FUNCTION: Provides a sump with multiple inlets into which the foundation drain tile lines are connected.

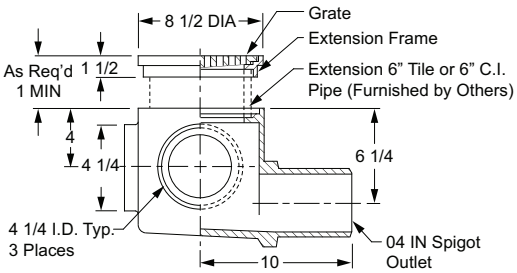

OPTIONS:		ADD
-G	Galvanized CI	903.00
-NB	Nickel Bronze Top	1,251.00
-PB	Polished Bronze Top	971.00
-SC	Solid CI Cover	316.00

A OUTLET SIZE	FREE AREA SQ. IN.	†DUCO CI	APPROX. WEIGHT LBS
04"	14.25"	**1,257.00**	55

REGULARLY FURNISHED:
Duco Cast Iron Body and Extension Frame with Cast Iron Slotted Grate.

†REGULARLY FURNISHED

FIG. 7140 FLOOD-GATE® IN-LINE AUTOMATIC BACKWATER VALVE

FUNCTION: Functions as a drainage control valve providing "closure" protection during emergency storm conditions or when building is completely shut down. The FLOOD-GATE® does not have to be activated as no electronics are required for valve operation. The valve is completely automatic both closing and resetting. Once closed it prevents any leakage beyond the gate. Applications include all commercial, institutional, residential and industrial installations including basements and elevator pits.

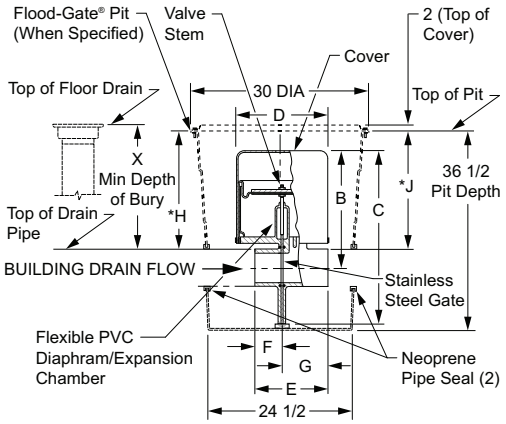

OPTIONS:

FGA	Complete Alarm System
FGP	Poly Pit and Lid, with Hardware
FGS	Poly Pit with Steel Lid with Hardware
FGSL	Steel Pit Lid Only

U.S. Patent No. 5,538,032
Other U.S. and foreign patents pending

Conforms to ASME A112.14.1-2003
IAPMO Listed, File No. 3758

For Pricing information on this Product Series contact your local Jay R. Smith Mfg. Co. representative.

A DIA NO-HUB (-Y) IN/OUT SIZE	B CENTERLINE TO TOP	C OVERALL HEIGHT	D DIA WIDTH	E LENGTH	F INLET LENGTH	G OUTLET LENGTH	*H	*J	X MIN BURY DEPTH	BASE WIDTH
04"	15"	22 15/16"	13 1/4"	6 5/8"	2 3/8"	4 1/4"	26"	26 1/2"	9"	7 1/2"
06"	20 3/8"	31 1/4"	13 1/4"	8 3/16"	3 3/16"	5"	22"	22 1/2"	14"	9 1/2"

REGULARLY FURNISHED: Duco Coated Cast Iron Body Complete with Stainless Steel Gate and Flexible PVC Diaphragm/Expansion Chamber.

*Dimension can be decreased by up to 10" for the 4" size and 3" for the 6" size by cutting the pit and telescoping the 2 sections to meet required depth. See instructions supplied with pit.

FIG. 7150 IN-LINE MANUAL SHUT-OFF VALVE

FUNCTION: Functions as a drainage control valve; flapper type backwater valve provides temporary protection against sewage backflow surges. Manually closed "spade" type gate valve provides additional complete "closure" protection during emergency conditions, when building is completely shut down or during extended periods of backflow conditions.

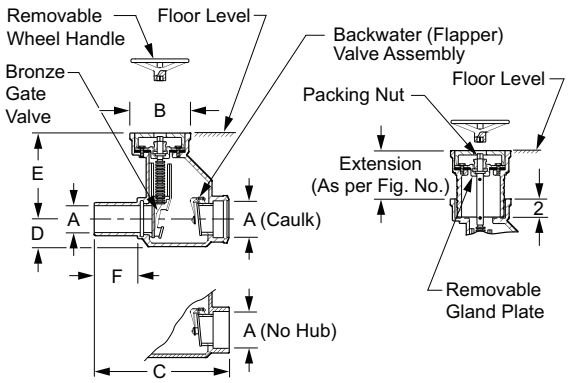

INLET VARIATIONS

Inlet Type	ADD
Caulk	N/C
No-Hub	N/C

OPTIONS:		DEDUCT
-LW	Less Wheel Handle	91.00
-SW	Sized for Service Weight	N/C

FIGURE NO.	EXTENSION	A OUTLET SIZE	B DIA.	C	D	E	F	†DUCO CI BRZ VALVE	GALV CI BRZ VALVE	APPROX. WEIGHT LBS
7150	-	04"	8"	18"	3 3/4"	12"	5"	**6,453.00**	**8,173.00**	110
	-	06"	10 1/2"	20"	4 1/2"	14 1/2"	5"	**9,507.00**	**11,227.00**	140
7151	12"	04"	8"	18"	3 3/4"	12"	5"	**9,113.00**	**10,833.00**	110
7152	24"	04"	8"	18"	3 3/4"	12"	5"	**11,774.00**	**13,494.00**	130
7153	9 1/2"	06"	10 1/2"	20"	4 1/2"	14 1/2"	5"	**12,165.00**	**13,885.00**	140
7154	21 1/2"	06"	10 1/2"	20"	4 1/2"	14 1/2"	5"	**14,823.00**	**16,543.00**	160
7155	Adaptor	04"	8"	18"	3 3/4"	12"	5"	**8,380.00**	**10,100.00**	110
	Adaptor	06"	10 1/2"	20"	4 1/2"	14 1/2"	5"	**11,809.00**	**13,529.00**	115

REGULARLY FURNISHED: Duco Cast Iron Body and Cover with Removable Wheel Handle. Bronze Gate and Bronze Flapper Valve. Cast Iron Extensions as Indicated by Figure Number Selected.

NOTES: Extension joint(s) must be caulked using 1"(25) of oakum and 1"(25) of poured lead. Not sized for compression type gaskets.

During periods when manual shut-off valve is closed, use of building plumbing fixtures and drains must be avoided.

B.W.V. flapper set at factory to hang in closed position. Pin can be moved to permit flapper to hang open 1/4" to permit air circulation.

4" size furnished with Delrin Backed Neoprene flapper. 6" size furnished with bronze flapper.

Fig 7150C & 7150Y are accessible from finished floor. Non-rising stem with spade-shaped gate assures positive closure.

†REGULARLY FURNISHED

FIG. 7220, 7221 DEEP SEAL "P" TRAPS W/FEMALE THREADED INLET AND OUTLET (7220) OR MALE THREADED INLET AND FEMALE THREADED OUTLET (7221)

FUNCTION: Provides the protection of an independent "deep seal" cast iron trap for use in conjunction with bottom outlet drains. Can be provided with bottom cleanout plug, trap primer connection or low flushing tapping.

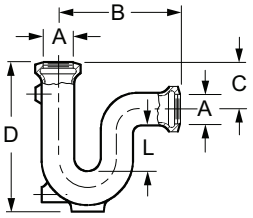

Fig. 7220

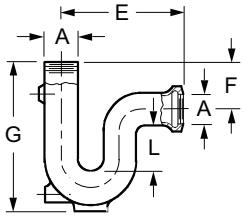

Fig. 7221

OPTIONS:		ADD
-BP	Bronze Cleanout Plug	264.00
-FC	Flushing Connection	191.00
-P	Trap Primer Conn	191.00

A OUTLET SIZE	B	C	D	E	F	G	L SEAL	†DUCO CI	GALV CI	ARC CI INSIDE	APPROX. WEIGHT LBS
02"	6 1/4"	2 3/4"	10"	6 1/4"	2 3/4"	10"	4"	**563.00**	**721.00**	**801.00**	10
03"	8"	3"	13"	8"	3"	13"	5"	**863.00**	**1,240.00**	**1,305.00**	20
04"	9 3/4"	4 1/4"	15 1/2"	9 3/4"	6"	17 1/2"	5"	**1,295.00**	**1,890.00**	**1,921.00**	33

REGULARLY FURNISHED: Duco Cast Iron Trap.

FIG. 7222, DEEP SEAL "P" TRAP WITH HUB INLET AND SPIGOT OUTLET

FUNCTION: Provides the protection of an independent "deep seal" cast iron trap for use in conjunction with bottom outlet drains. Can be provided with bottom cleanout plug, trap primer connection or low flushing tapping.

7222
Same as 7220 but with Hub Inlet and Spigot Outlet

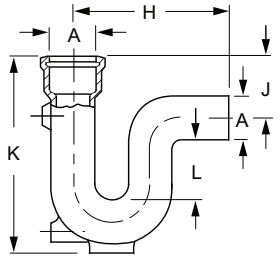

OPTIONS:		ADD
-BP	Bronze Cleanout Plug	264.00
-FC	Flushing Connection	191.00
-P	Trap Primer Conn	191.00
-Y	No-Hub Adaptor	See Fig. 2646Y

A OUTLET SIZE	H	J	K	L SEAL	†DUCO CI	GALV CI	ARC CI INSIDE	ALL BRONZE (-BB)	APPROX. WEIGHT LBS
02"	10"	4"	11 1/2"	4"	**563.00**	**721.00**	**801.00**	**POA**	10
03"	11 1/2"	4 1/2"	14 1/2"	5"	**863.00**	**1,240.00**	**1,305.00**	**POA**	20
04"	14 3/4"	7"	18 1/2"	5"	**1,295.00**	**1,890.00**	**1,921.00**	**POA**	33

REGULARLY FURNISHED: Duco Cast Iron Trap.

FIG. 7230, 7231, 7232 DEEP SEAL TRAP WITH FLOOR CLEANOUT

FUNCTION: Provides the protection of an independent "deep seal" cast iron trap when used in conjunction with bottom outlet drains. Integral hub at crown of the trap permits the installation of a suitable floor level cleanout.

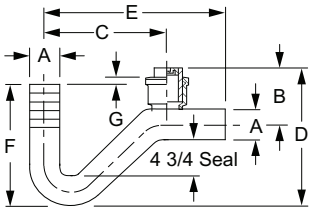

Fig. 7230

Adjustable Housing With Tractor Cover

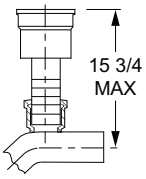

Fig. 7231

Extension Ferrule With Cleanout Plug

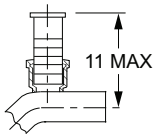

Fig. 7232

FIGURE NO.	A OUTLET SIZE	B	C	D	E	F	G	†DUCO CI	GALV CI	APPROX. WEIGHT LBS
7230	02"	6"	11"	13 3/4"	16 1/2"	12 1/2"	1/4	**1,355.00**	**2,030.00**	37
	03"	7 3/4"	14 1/2"	15 3/4"	21 3/4"	14"	3/4"	**1,739.00**	**2,414.00**	37
	04"	8 1/2"	14 1/2"	18 1/2"	21 1/2"	16"	1 1/4	**1,970.00**	**2,645.00**	42
7231	02"	6"	11"	13 3/4"	16 1/2"	12 1/2"	1/4"	**1,658.00**	**2,333.00**	56
	03"	7 3/4"	14 1/2"	15 3/4"	21 3/4"	14"	3/4"	**2,128.00**	**2,803.00**	56
	04"	8 1/2"	14 1/2"	18 1/2"	21 1/2"	16"	1 1/4"	**2,465.00**	**3,140.00**	58
7232	02"	6"	11"	13 3/4"	16 1/2"	12 1/2"	1/4"	**1,355.00**	**2,030.00**	43
	03"	7 3/4"	14 1/2"	15 3/4"	21 3/4"	14"	3/4"	**1,739.00**	**2,414.00**	43
	04"	8 1/2"	14 1/2"	18 1/2"	21 1/2"	16"	1 1/4"	**1,970.00**	**2,645.00**	70

REGULARLY FURNISHED: Duco Cast Iron Body and Ferrule with Bronze Cleanout Plug.

†REGULARLY FURNISHED

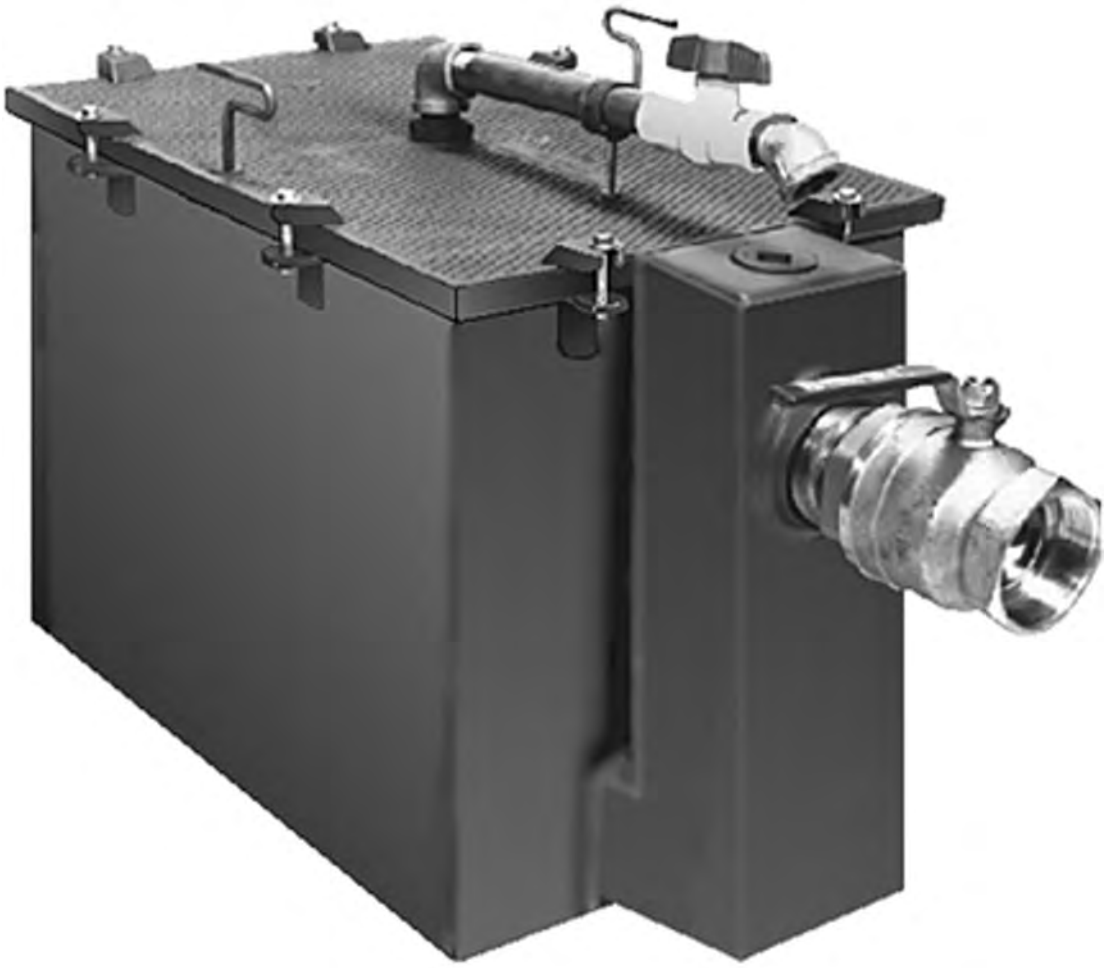

ORDERING GUIDELINES

8000 SERIES

After identifying the proper options required to meet the engineering specification, place order as shown below:

Examples:

8050T03 (-B-QC)

- Figure No.
- Type of Outlet (Threaded)
- Pipe Size (Inches)
- Lift Out Sediment Bucket
- Cover Recessed for Terrazzo Ceramic or Quarry Tile

8910-50T04 (-F-C-SS)

- Figure No.
- GPM (Flow Rate)
- Type of Outlet (Threaded)
- Pipe Size (Inches)
- Flashing Flange and Flashing Clamp
- All Stainless Steel Unit

*All variation suffixes are to be shown in parenthesis.

INTERCEPTORS TECHNICAL DATA

SCIENTIFICALLY ENGINEERED For over fifty years, JAY R. SMITH MFG. CO. has conducted hundreds of tests both in the laboratory and in the field, in order to offer efficient grease interceptors which have improved operational characteristics suitable for most applications.

When designing our line of interceptors, we kept in mind the fact that these units must be for practical applications. As a result, the units embody practical features that make installation easier and also simplify cleaning and servicing.

PLUMBING AND DRAINAGE INSTITUTE CERTIFICATION SEAL Many Smith Interceptors bear the certification seal of the Plumbing and Drainage Institute. Ratings shown in the catalog conform with the rigid standards established by the Institute. This seal on Smith Grease Interceptors is your guarantee that the designs and ratings have met or surpassed all standards established by the Institute.

PRACTICAL FEATURES The one piece cover used on SMITH Interceptors is equipped with a single lock and lift ring (two on large sizes). No bolts or nuts to get lost or wrenches to look for . . . the locking device is a practical feature of the cover assembly.

A soft, flat or round neoprene gasket is firmly attached to the body of all interceptors. This eliminates the gasket tearing loose every time the cover is removed.

Interceptors have an air relief to eliminate the possibility of siphonage, and are furnished with a separate flow control device to insure the interceptor will function within its rated capacity.

APPLICATION A Grease Interceptor is necessary where grease, fats, oils or other similar line clogging contaminants are present in waste water that must be disposed of through the sanitary system.

Preventing grease from entering drainage lines should always be considered when designing the plumbing drainage system in any restaurant, cafeteria, hotel, school, hospital, institutional or commercial building having facilities for the preparation and serving of food in quantity. In these installations, as well as in commercial food processing plants, dairies, and other industries where greases and fats are a by-product, an efficient SMITH interceptor should be installed to prevent this material from entering the drainage lines.

HOW THE INTERCEPTOR OPERATES

Water draining to the interceptor passes through a flow control fitting which regulates the velocity of the water to the capacity of the interceptor. As the water enters the interceptor at this controlled rate of flow it is free of turbulence. It then passes over a series of separator baffles which are strategically located to insure that greases, fats and oils are efficiently separated from the waste water. Once separated, these contaminants rise to the surface of the water in the interceptor by natural flotation and are accumulated until removed. The waste water now relieved of over 90% of the contaminant oils and greases, continues to flow through the interceptor into the sanitary system.

TYPICAL SINGLE FIXTURE INSTALLATIONS

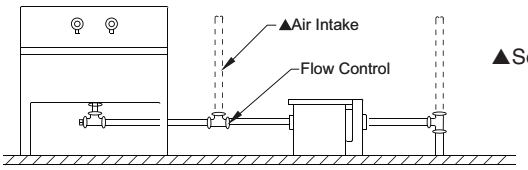

FIXTURE NOT TRAPPED

▲See Footnote on next page

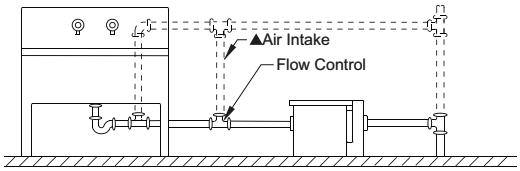

FIXTURE TRAPPED AND VENTED SEPARATELY

PROCEDURE FOR SIZING GREASE INTERCEPTORS

EXAMPLE

STEP 1	Determine the cubic content of the fixture by multiplying length x width x depth.	A sink 48" long by 24" wide by 12" deep Cubic content 48 x 24 x 12 = 13,824 cubic in.
STEP 2	Determine the capacity in gallons. 1 gal. = 231 cubic inches.	Contents in gals. $\frac{13,824}{231}$ = 59.8 gals.
STEP 3	Determine actual drainage load. The fixture is usually filled to about 75% of capacity with waste water. The items being washed displace about 25% of the fixture content. Actual drainage load = 75% of fixture capacity.	Actual Drainage Load .75 x 59.8 gals. = 44.9 gals.
STEP 4	Determine the flow rate and the drainage period. In general, good practices dictate a one minute drainage period, however where conditions permit, a 2 minute period is acceptable. Drainage period is the actual time required to completely empty the fixture. Flow Rate = $\frac{\text{Actual Drainage Load}}{\text{Drainage Period}}$	Calculate flow rate for 1 minute period. Flow Rate $\frac{44.9 \text{ gals.}}{1 \text{ Min.}}$ = 44.9 GPM For 2 minute period Flow Rate $\frac{44.9 \text{ gals.}}{2 \text{ Min.}}$ = 22.5 GPM
STEP 5	Select the Interceptor which corresponds to the flow rate calculated. Note: Select larger size when flow rate falls between two sizes listed. If flow rate is above 50 GPM, select a larger Interceptor (Fig. 8400 Series).	For 1 minute period 44.9 GPM requires a Fig. 8050 For 2 minute period 22.5 GPM requires a Fig. 8025

As a general rule, it is good practice to size the Interceptor so that its rated capacity is never less than 40% of the fixture capacity in gallons. In the example above, the actual fixture capacity is 59.8 gals., and 40% of this would be 23.9 gals. or a Fig. 8025. It is readily seen that a drainage period other than one or two minutes can be used. If conditions justify, any period between one and two minutes is satisfactory, however, we do not recommend a period longer than 2 minutes. Using the 40% rule of thumb gives a drainage period of 1 7/8 minutes.

AUTOMATIC DRAW-OFF GREASE INTERCEPTORS

Smith "GT" Series Semi-Automatic Draw-off Grease Interceptors offer the same high intercepting efficiency as the conventional manual cleaned models, but completely eliminate the unsanitary and undesirable job of removing the accumulated grease manually.

The semi- automatic draw-off interceptor eliminates . . .
- time consuming cover removal
- manually removing accumulated grease
- offensive odors

Since cleaning a "GT" interceptor is simple, fast and efficient, maintenance personnel will more likely follow the regular cleaning schedule. This is a distinct advantage over the conventional units which are frequently left unattended.

When to Clean - The ideal time to clean is immediately after the interceptor has been heavily used.

Cleaning Frequency - The frequency of the draw-off cycle is determined by the use load factor of the interceptor. An ideal cleaning cycle can be set after the unit is in operation for several weeks. By observing the amount of grease used and the frequency of use, the operator can determine a logical cleaning cycle.

Cleaning Operation 8000 GT Series

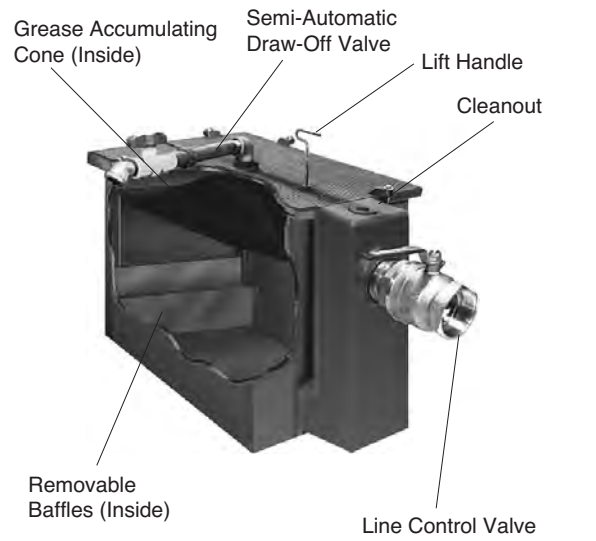

Fig. 8000GT

1. Unit in normal use has the line control valve open and semi-automatic draw-off valve closed. When cleaning is required, run a full stream of hot water through interceptor. It is preferable to have this water at 140□ or higher, running for a period of at least two minutes.
2. Turn off hot water running into the interceptor and wait for a period of three to five minutes for grease in the interceptor to liquefy.
3. Semi-Automatic draw-off cycle can now be started. Close the line control valve.
4. Open semi-automatic draw-off valve at top of the interceptor and place a container underneath this valve. Run hot water through interceptor at a rate of between 1 1/2 and 2 1/2 G.P.M.
5. After water has run into interceptor at this rate for a short period, the unit will fill. Accumulated liquefied grease will be raised into cone and draw-off piping.
6. Allow accumulated liquefied grease to flow out of draw-off valve until clear water appears.
7. When clear water appears, shut off flow of hot water into interceptor, turn line control valve to open position. Close semi-automatic draw-off valve at top of interceptor.
8. Interceptor at this stage is ready again for normal use.

INSTALLATION - GREASE INTERCEPTORS

MULTIPLE FIXTURE INSTALLATIONS

It is sometimes practical to discharge the waste from two or more sinks into a single Interceptor. This practice is only recommended when all fixtures are close together, avoiding installation of long piping runs to the Interceptor. For multiple installations, size as follows:

1. Determine total capacity of all sinks.
2. Establish the maximum simultaneous discharge of the sinks and fixtures.
3. Using the maximum simultaneous load capacity, determine the Interceptor required using the sizing method shown on previous page.

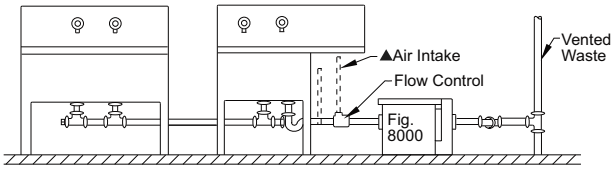

ON FLOOR INSTALLATION

▲Terminate Air Intake outside above the rim of sink with return bend or connect to vent or vent stack as required by local code.

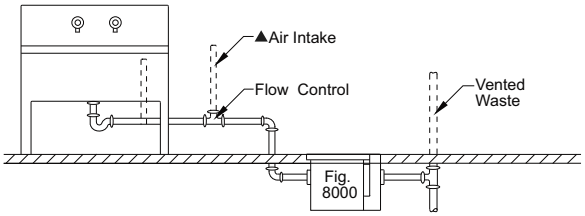

SINGLE INSTALLATION - FULLY RECESSED

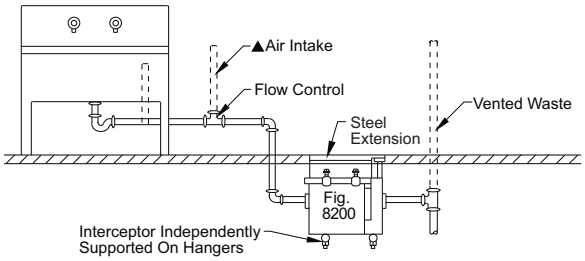

RECESSED WITH EXTENSION TO FLOOR LEVEL

Interceptor cover may be brought to floor level by using an extension when Interceptor installation is below the floor.

GREASE INTERCEPTORS WITH EXTENSION INSTALLATION NOTE

The Extension of 8200 Series Interceptors is designed to increase the roughing dimension from the Inlet-Outlet center line to the finished floor. The Extension should not be used to support the entire unit. When installed in ground floor locations, the Interceptor body must rest on solid ground or on a suitable concrete pad. If the 8200 Series unit is installed in an upper floor (suspended in the ceiling below), a suitable method of supporting the entire unit must be provided. The installation sketch shows a typical Interceptor with Extension and a recommended method of supporting the entire weight.

SUSPENDED INTERCEPTOR INSTALLATION CONSIDERATIONS

Whenever an interceptor is to be installed suspended with receiving cradle (8300 series) or independently (all other series interceptors), proper support is essential for safety and functional integrity of the installation.

Trapeze type hangers such as those employed for support of multiple runs of horizontal piping are recommended for support of independent interceptors. Such supports should also be considered for 8300 series receiving cradles to supplement the integral concrete anchor flange. Supports must be of sufficient strength for the purpose intended and meet with the approval of the architect or engineer.

FLOW CONTROL FITTING

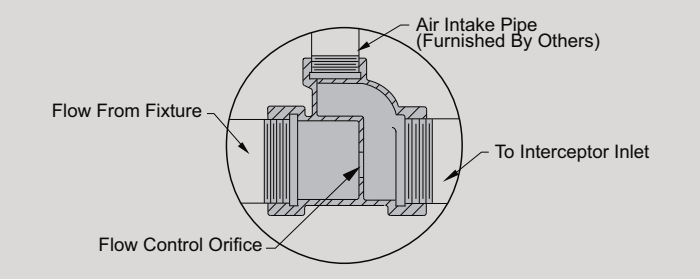

MAINTENANCE

All interceptors must be cleaned regularly. The frequency of grease removal is dependent upon the capacity of the interceptor and the quantity of grease in the waste water. The cleaning interval can vary from once a week to once in several weeks. When this period is determined, we recommend regular cleaning at this interval in order to maintain proper operating efficiency. Solids that collect in the interceptor through settling should also be removed at the same time of the grease removal. At this time the air relief port should be checked to see that it is clear. Complete operating and maintenance instructions are packed with every interceptor.

DISHWASHER MACHINES

A separate grease Interceptor is recommended with each dishwashing machine. The size of the Interceptor is determined by the dishwasher capacity.

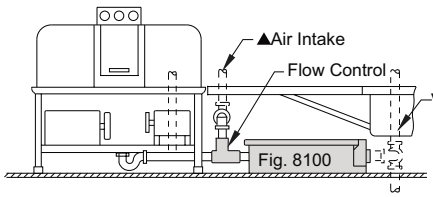

▲See Footnote on previous page

LOW TYPE - DISHWASHER INSTALLATION

Dishwasher Capacity	Gals.	15-20	20-30	30-50	50-70	70-100
Interceptor Size	Fig.	8015	8020 8120	8025	8035 8135	8050 8150

INTERCEPTORS

OIL INTERCEPTORS

An oil interceptor is required wherever lubricating oil, cutting oil, kerosene, gasoline, naptha, paraffin, trisodium phosphate and numerous other light density and volatile liquids are present in the drainage system.

In commercial establishments such as service stations, garages, auto repair shops, dry cleaners, laundries, industrial plants or process industries having machine shops, metal treating process rooms, chemical process or mixing rooms, etc., there is always the problem of flammable or volatile liquids entering the drainage system which can contaminate the sewer line and cause a serious fire or explosive condition.

Oil interceptors are designed to separate oils and other light density volatile liquids which are discharged into the drainage system.

The interceptor is installed between the drain and the sanitary system so the liquids passing through the interceptor are trapped and separated by gravity through a baffle arrangement and are then diverted to an accumulator chamber and removed through the gravity draw-off built into the interceptor. This draw-off can be piped directly to a storage tank so the interceptor continuously and automatically drains the accumulated oils.

Each Oil Interceptor is furnished with a sediment bucket which collects chips, particles or other sediment frequently present in industrial waste that could clog the drainage system. A gasketed removable cover provides access for cleaning the interceptor. To eliminate pressure build-up inside the interceptor, a vent connection on each side of the body allows the venting of the interceptor.

A SMITH Oil Interceptor is sized in accordance with maximum anticipated gallon per minute flow rate of water that would be discharged through the drains it serves. A flow control fitting of the exact gallon per minute interceptor rating insures maximum oil interception efficiency.

INSTRUCTIONS FOR ADJUSTING GRAVITY OIL DRAW-OFF

When the Interceptor is completely installed, establish operating water line by running water thru interceptor at maximum flow rate. Mark or locate this operating water line and adjust tubing 1/8" above this line as shown in Detail "A". Adjustment should be checked after Interceptor is in operation. If water is present in oil removed through gravity draw-off, adjustable brass tube should be raised slightly, until no water is present.
APPROVED BY N.Y. BOARD OF STANDARDS AND APPEALS
NO. 935-53-SM

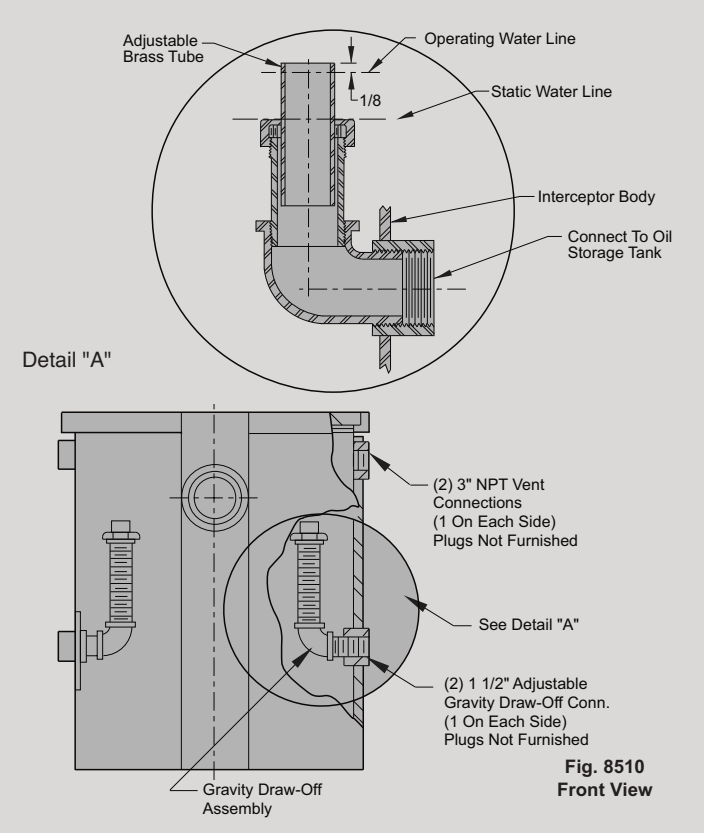

Fig. 8510
Front View

INSTALLATION EXAMPLE

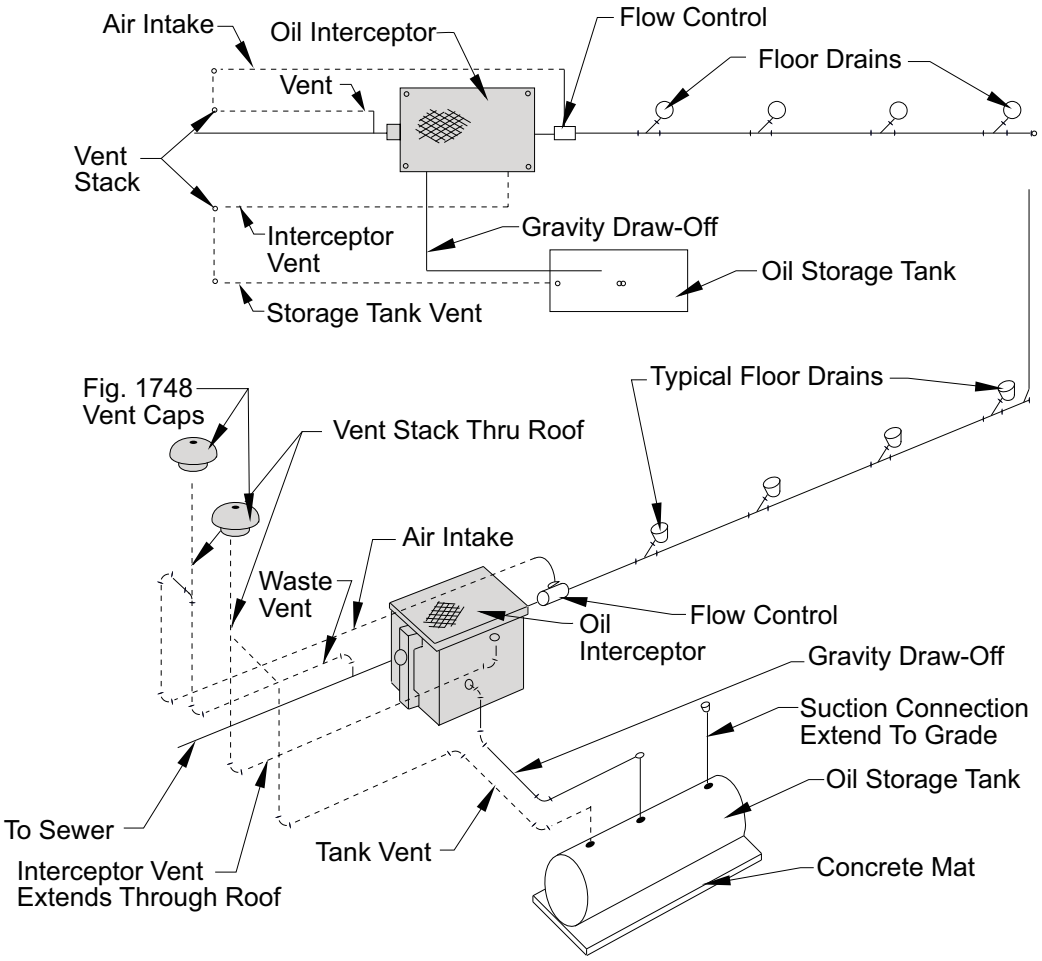

NOTES

Please refer to the end of the Interceptor section for the Grease+Gard®II.

FIG. 8000 SERIES LARGE CAPACITY STEEL GREASE INTERCEPTORS

FUNCTION: Used in kitchens, restaurants, institutions and all types of food processing areas where waste water contains grease, fats and oil. Rate of flow into interceptor is controlled by a flow control fitting, thus enabling the interceptor to collect over 90% of the grease which flows into it. "Uni-lock" cover design permits fast cover removal for periodic cleaning. Interceptor may be set on floor, semi-recessed in floor or fully recessed with cover flush with finished floor. Fig. 8100 Series are extra low designs adaptable for use with dishwashers or low roughing sinks.

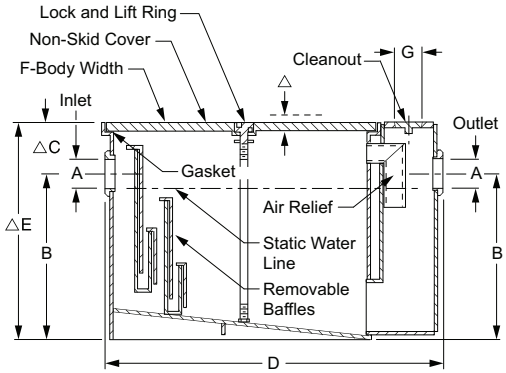

SIDE VIEW
Fig. 8010 Shown

△ **NOTE:** When tile top is specified, add 1".
When Terrazzo top is specified, add 1 1/4".

Figs. 8007 thru 8050, 8120 and 8135 carry the Plumbing and Drainage Institute Certification Seal Certifying conformance to Grease Interceptor Standard PDI-G101.

OPTIONS: **ADD**

-E	Extension	**See Fig. 8210-8250 Series**
-Y	No-Hub Adaptor (2 req'd)	**See Fig. 2646Y for list add**
-Z	Enzyme Opening in Cover	**195.00**

If purchasing the extension alone, contact engineering to determined if cover is also needed:

	LIST
8210E06	**5,894.00**
8215E06	**6,063.00**
8220E06	**6,066.00**
8225E06	**6,455.00**
8235E06	**7,244.00**
8250E06	**7,833.00**

NOTE: Whenever an interceptor is to be installed suspended in a floor slab with a cradle or independently, proper support is essential for safety and functional integrity of the installation. Supports / support system shall be of sufficient strength and proper design for the purpose intended and meet the approval of the architect and structural engineer. Jay R. Smith Mfg. Co. is not responsible for the design or recommendation of such supports. Upon request, Jay R. Smith Mfg. Co. will provide the weight of the specific unit. Additional weight must be added to compensate for the weight of the liquid / grease when full and in the flowing mode of operation.

NOTE: It is the responsibility of the installer to check all parts (internal & external) to verify they are in their proper operating order & locations.

NOTE: If any dimension is larger than 92" or if any single item weighs more than 3,500 lbs., this would be an oversized and/or overweight product and our standard FFA terms may not apply. **Please contact our shipping department for additional shipping charges**.

FIGURE NO.	GPM FLOW RATE	GREASE CAP. LBS.	INLET & OUTLET SIZE A	ROUGHING DIM B	ROUGHING DIM C	ROUGHING DIM D	BODY E HEIGHT	BODY F WIDTH	C.O PLUG SIZE G	†DUCO INSIDE AND OUTSIDE	DUCO W/ARC INSIDE OR OUTSIDE	W/ARC INSIDE AND OUTSIDE	ADD FOR: LIFT OUT SEDIMENT BKT (-B)	ADD FOR: H20 COVER	ADD FOR: ALUM COVER (-AC)	ADD FOR: COVER RECESSED FOR TILE (-TC)/ TERRAZZO (-QC)	APPROX. WT. LBS.
8004	4	8	02"	7 3/4"	3 1/4"	16 3/4"	11"	9"	2"	**3,235.00**	**7,930.00**	**8,329.00**	**2,294.00**	**6,369.00**	**1,744.00**	**–**	68
8007	7	14	02"	8 1/2"	3 1/2"	19"	12"	10"	2"	**4,495.00**	**9,279.00**	**9,696.00**	**2,294.00**	**7,132.00**	**1,744.00**	**–**	79
8010	10	20	*02"	9 1/2"	3 3/4"	21 1/4"	13 1/4"	11 1/2"	2"	**5,280.00**	**10,359.00**	**10,807.00**	**2,294.00**	**7,673.00**	**1,744.00**	**6,574.00**	115
8015	15	30	*02"	12"	3 1/2"	25"	15 1/2"	13 1/2"	2"	**7,827.00**	**13,303.00**	**13,893.00**	**2,294.00**	**8,252.00**	**1,744.00**	**7,978.00**	120
8020	20	40	*03"	13"	4"	28 1/2"	17"	15 3/4"	2"	**9,574.00**	**15,249.00**	**16,065.00**	**2,351.00**	**8,738.00**	**2,444.00**	**8,924.00**	125
8025	25	50	*03"	15 1/4"	4 1/2"	30"	19 3/4"	16 3/4"	2"	**10,759.00**	**16,724.00**	**17,681.00**	**2,484.00**	**9,225.00**	**2,444.00**	**10,313.00**	130
8035	35	70	*03"	16"	5"	32 1/2"	21"	18 1/4"	2"	**13,296.00**	**19,730.00**	**20,833.00**	**2,659.00**	**10,192.00**	**2,444.00**	**12,662.00**	155
8050	50	100	*03"	17 1/2"	6 3/4"	35 1/2"	24 1/4"	20 3/4"	2"	**17,606.00**	**26,042.00**	**27,512.00**	**3,977.00**	**10,678.00**	**2,444.00**	**17,601.00**	195
LOW TYPE																	
8120	20	40	*03"	7"	3 1/2"	38 1/2"	10 1/2"	21 3/4"	2"	**12,908.00**	**18,685.00**	**19,677.00**	**1,819.00**	**–**	**2,444.00**	**19,065.00**	145
8135	35	70	*03"	7"	4 3/4"	49 1/2"	11 3/4"	27 3/4"	2"	**16,622.00**	**23,252.00**	**24,723.00**	**2,502.00**	**–**	**3,042.00**	**25,358.00**	222
8150	50	100	*03"	10"	6"	49 1/2"	16"	27 3/4"	2"	**28,160.00**	**36,977.00**	**38,995.00**	**2,575.00**	**–**	**3,042.00**	**32,629.00**	343

*Available with **one** size larger inlet and outlet when specified. No charge.

REGULARLY FURNISHED: Steel Interceptor with Gray Duco Coating Inside and Outside and Flow Control Fitting.

†REGULARLY FURNISHED

INTERCEPTORS

FIG. 8000GT SERIES STEEL GREASE INTERCEPTORS WITH SEMI-AUTOMATIC DRAW-OFF

FUNCTION: Used in all areas where grease, oil and fats must be intercepted and collected. Unique semi-automatic draw-off design permits removal of accumulated grease without cover removal. When specific directions are followed, accumulated grease in liquid form is discharged through the semi-automatic draw-off piping for convenient disposal. This design eliminates the messy cleaning job which must be done in ordinary types of interceptors.

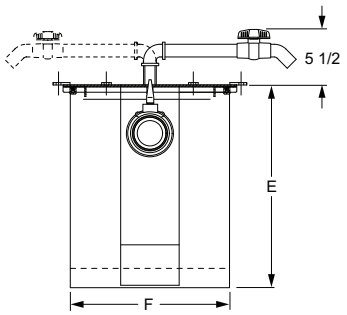

FRONT VIEW

OPTIONS: **ADD**

With Bronze Line Shut-off Valve.....**POA**

Y No-Hub Adaptor (2 req'd) .....**See Fig. 2646Y for list add**

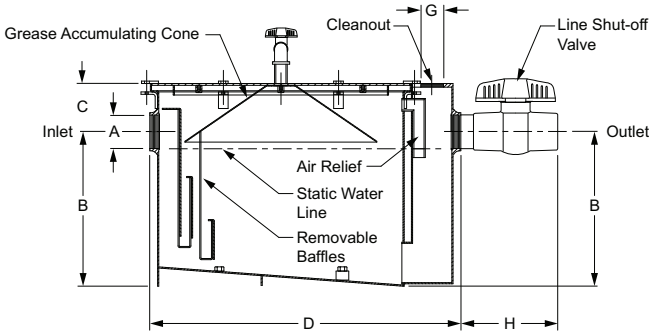

SIDE VIEW
Fig. 8035GT Shown

FIGURE NO.	GPM FLOW RATE	GREASE CAP. LBS.	INLET & OUTLET SIZE A*	ROUGHING DIM B	ROUGHING DIM C	ROUGHING DIM D	BODY E HEIGHT	BODY F WIDTH	C.O PLUG SIZE G	LINE SHUT-OFF VALVE H	†DUCO COAT INSIDE AND OUTSIDE	W/ARC INSIDE OR OUTSIDE	W/ARC INSIDE AND OUTSIDE	APPROX. WT. LBS.
8007GT	07	14	02"	8 1/2"	3 1/2"	19"	12"	10 3/4"	2"	6 3/4"	**11,493.00**	**17,123.00**	**22,215.00**	95
8010GT	10	20	02"	9 1/2"	3 3/4"	21 1/4"	13 1/4"	13"	2"	6 3/4"	**13,593.00**	**19,335.00**	**24,534.00**	110
8015GT	15	30	02"	12"	3 1/2"	25"	15 1/2"	14"	2"	6 3/4"	**14,481.00**	**21,114.00**	**26,638.00**	145
8020GT	20	40	03"	13"	4"	28 1/2"	17"	15 3/4"	2"	10"	**18,618.00**	**26,317.00**	**32,383.00**	130
8025GT	25	50	03"	15 1/4"	4 1/2"	30"	19 3/4"	16 3/4"	2"	10"	**21,599.00**	**29,606.00**	**36,097.00**	150
8035GT	35	70	03"	16"	5"	32 1/2"	21"	18 1/4"	2"	10"	**22,156.00**	**30,454.00**	**37,367.00**	180
8050GT	50	100	03"	17 1/2"	6 3/4"	35 1/2"	24 1/4"	20 3/4"	2"	10"	**25,294.00**	**34,006.00**	**41,547.00**	205
8075GT	75	150	04"	21 1/2"	15 1/2"	50"	37"	30 1/2"	3"	12 3/4"	**30,092.00**	**37,642.00**	**47,548.00**	250
LOW TYPE														
8120GT	20	40	03"	7"	3 1/2"	38 1/2"	10 1/2"	21 3/4"	2"	10"	**21,477.00**	**29,344.00**	**36,119.00**	140
8135GT	35	70	03"	7"	4 3/4"	49 1/2"	11 3/4"	27 3/4"	2"	10"	**30,275.00**	**38,951.00**	**46,243.00**	188
8150GT	50	100	03"	10"	6"	49 1/2"	16"	27 3/4"	2"	10"	**37,139.00**	**46,588.00**	**56,651.00**	213

*Available with larger inlet and outlet when specified. Contact the factory for pricing.

REGULARLY FURNISHED: Steel Interceptor with Gray Duco Coating Inside and Outside with Steel Cone Draw-off Piping and Valve Line Shut-off Valve and Flow Control Fitting.

NOTE: Whenever an interceptor is to be installed suspended in a floor slab with a cradle or independently, proper support is essential for safety and functional integrity of the installation. Supports / support system shall be of sufficient strength and proper design for the purpose intended and meet the approval of the architect and structural engineer. Jay R. Smith Mfg. Co. is not responsible for the design or recommendation of such supports. Upon request, Jay R. Smith Mfg. Co. will provide the weight of the specific unit. Additional weight must be added to compensate for the weight of the liquid / grease when full and in the flowing mode of operation.

NOTE: It is the responsibility of the installer to check all parts (internal & external) to verify they are in their proper operating order & locations.

NOTE: If any dimension is larger than 92" or if any single item weighs more than 3,500 lbs., this would be an oversized and/or overweight product and our standard FFA terms may not apply. **Please contact our shipping department for additional shipping charges**.

†REGULARLY FURNISHED

FIG. 8000GTX SERIES STEEL GREASE INTERCEPTORS W/SEMI-AUTOMATIC DRAW-OFF FOR RECESSED INSTALLATION

FUNCTION: Used in kitchens, restaurants, institutions and all types of food processing areas where grease must be intercepted. This type of interceptor is of the same design as the Fig. 8000GT Series, which permits semi-automatic grease removal without removing the cover. The Fig. 8000GTX Series is designed for recessed installation; therefore, the conventional draw-off piping is not included, a flexible removable draw-off hose is used.

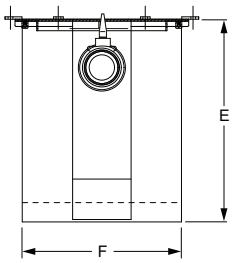

FRONT VIEW

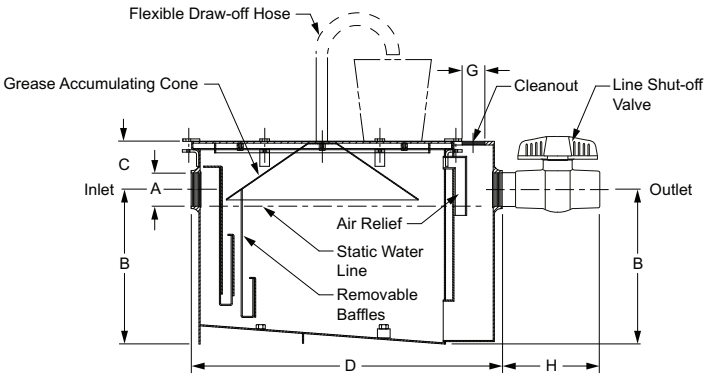

SIDE VIEW

OPTIONS: **ADD**

With Bronze Line Shut-off Valve.....**POA**

Y No-Hub Adaptor (2 req'd) .....**See Fig. 2646Y for list add**

FIGURE NO.	GPM FLOW RATE	GREASE CAP. LBS.	INLET & OUTLET SIZE A*	ROUGHING DIM B	ROUGHING DIM C	ROUGHING DIM D	BODY E HEIGHT	BODY F WIDTH	C.O PLUG SIZE G	LINE SHUT-OFF VALVE H	†DUCO COAT INSIDE AND OUTSIDE	W/ARC INSIDE OR OUTSIDE	W/ARC INSIDE AND OUTSIDE	APPROX. WT. LBS.
8007GTX	07	14	02"	8 1/2"	3 1/2"	19"	12"	10 3/4"	2"	6 3/4"	**11,493.00**	**17,123.00**	**22,215.00**	95
8010GTX	10	20	02"	9 1/2"	3 3/4"	21 1/4"	13 1/4"	13"	2"	6 3/4"	**13,593.00**	**19,335.00**	**24,534.00**	110
8015GTX	15	30	02"	12"	3 1/2"	25"	15 1/2"	14"	2"	6 3/4"	**14,481.00**	**21,114.00**	**26,638.00**	145
8020GTX	20	40	03"	13"	4"	28 1/2"	17"	15 3/4"	2"	10"	**18,618.00**	**26,317.00**	**32,383.00**	130
8025GTX	25	50	03"	15 1/4"	4 1/2"	30"	19 3/4"	16 3/4"	2"	10"	**21,599.00**	**29,606.00**	**36,097.00**	150
8035GTX	35	70	03"	16"	5"	32 1/2"	21"	18 1/4"	2"	10"	**22,156.00**	**30,454.00**	**37,367.00**	180
8050GTX	50	100	03"	17 1/2"	6 3/4"	35 1/2"	24 1/4"	20 3/4"	2"	10"	**25,294.00**	**34,006.00**	**41,547.00**	205
8075GTX	75	150	04"	21 1/2"	15 1/2"	50"	37"	30 1/2"	3"	12 3/4"	**30,092.00**	**37,642.00**	**47,548.00**	250
LOW TYPE														
8120GTX	20	40	03"	7"	3 1/2"	38 1/2"	10 1/2"	21 3/4"	2"	10"	**21,477.00**	**29,344.00**	**36,119.00**	140
8135GTX	35	70	03"	7"	4 3/4"	49 1/2"	11 3/4"	27 3/4"	2"	10"	**30,275.00**	**38,951.00**	**46,243.00**	188
8150GTX	50	100	03"	10"	6"	49 1/2"	16"	27 3/4"	2"	10"	**37,139.00**	**46,588.00**	**56,651.00**	213

*Available with larger inlet and outlet when specified. Contact the factory for pricing.

REGULARLY FURNISHED: Steel Interceptor with Gray Duco Coating Inside and Outside with Steel Cone, Draw-off Hose and Cap, Line Shut-off Valve and Flow Control Fitting.

NOTE: Whenever an interceptor is to be installed suspended in a floor slab with a cradle or independently, proper support is essential for safety and functional integrity of the installation. Supports / support system shall be of sufficient strength and proper design for the purpose intended and meet the approval of the architect and structural engineer. Jay R. Smith Mfg. Co. is not responsible for the design or recommendation of such supports. Upon request, Jay R. Smith Mfg. Co. will provide the weight of the specific unit. Additional weight must be added to compensate for the weight of the liquid / grease when full and in the flowing mode of operation.

NOTE: It is the responsibility of the installer to check all parts (internal & external) to verify they are in their proper operating order & locations.

NOTE: If any dimension is larger than 92" or if any single item weighs more than 3,500 lbs., this would be an oversized and/or overweight product and our standard FFA terms may not apply. **Please contact our shipping department for additional shipping charges**.

†REGULARLY FURNISHED

INTERCEPTORS

FIG. 8200 SERIES STEEL GREASE INTERCEPTORS WITH EXTENSION

FUNCTION: Used in kitchens, restaurants, institutions and all types of food processing areas where waste water contains grease, fats and oils which must be intercepted and collected before entering the drainage system. Interceptors with extensions are installed recessed in the floor with cover flush with finished floor. Extension provides additional roughing depth from top of interceptor to center line of inlet and outlet. Extension should not be used as a means for supporting the assembly. The entire interceptor body and extension must rest on solid ground or suitable support hangers.

OPTIONS: **ADD**

Y No-Hub Adaptor (2 req'd) .....**See Fig. 2646Y for list add**

-Z Enzyme Opening in Cover **195.00**

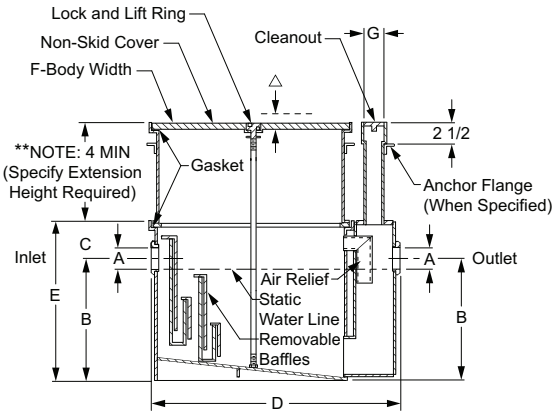

SIDE VIEW

△**NOTE**: When tile top is specified, add 1". When Terrazzo top is specified, add 1 1/4".

2" must be added to dimensions D & F for clearance of extension clamps.

Grease interceptor is an 8010-8050 series basic unit. Adding an extension changes the figure number to 8210-8250.

Figs. 8010 thru 8050 carry the Plumbing and Drainage Institute Certification Seal Certifying conformance to Grease Interceptor Standard PDI-G101.

FIGURE NO.	GPM FLOW RATE	GREASE CAP. LBS.	INLET & OUTLET SIZE A	ROUGHING DIM B	ROUGHING DIM C	ROUGHING DIM D	BODY E HEIGHT	BODY F WIDTH	C.O PLUG SIZE G	W/4 TO 6" EXTENSION †DUCO INSIDE AND OUTSIDE	ADD FOR: **EACH 1" OF EXTENSION OVER 6"	ANCHOR FLANGE (-F)	FLASHING FLANGE AND CLAMP (-F-C)	LIFT OUT SEDIMENT BKT (-B)	H20 COVER	ALUM COVER (-AC)	COVER RECESSED FOR TILE (-TC)/ TERRAZZO (-QC)	APPROX. WT. LBS.
8210	10	20	02"	9 1/2"	3 3/4"	21 1/4"	13 1/4"	11 1/2"	2"	**11,172.00**	**294.00**	**1,839.00**	**2,214.00**	**2,294.00**	**7,673.00**	**1,744.00**	**6,574.00**	180
*8215	15	30	02"	12"	3 1/2"	25"	15 1/2"	13 1/2"	2"	**13,890.00**	**334.00**	**1,839.00**	**2,214.00**	**2,294.00**	**8,252.00**	**1,744.00**	**7,978.00**	184
*8220	20	40	03"	13"	4"	28 1/2"	17"	15 3/4"	2"	**15,641.00**	**370.00**	**1,985.00**	**2,361.00**	**2,347.00**	**8,738.00**	**2,444.00**	**8,924.00**	211
*8225	25	50	03"	15 1/4"	4 1/2"	30"	19 3/4"	16 3/4"	2"	**17,213.00**	**422.00**	**2,068.00**	**2,469.00**	**2,484.00**	**9,225.00**	**2,444.00**	**10,313.00**	230
*8235	35	70	03"	16"	5"	32 1/2"	21"	18 1/4"	2"	**20,539.00**	**465.00**	**2,170.00**	**2,570.00**	**2,659.00**	**10,192.00**	**2,444.00**	**12,662.00**	265
*8250	50	100	03"	17 1/2"	6 3/4"	35 1/2"	24 1/4"	20 3/4"	2"	**25,439.00**	**541.00**	**2,214.00**	**2,916.00**	**3,977.00**	**10,678.00**	**2,444.00**	**17,601.00**	289

* Available with **one** size larger inlet and outlet when specified. No charge.
When ordering, Specify Extension height required from top of interceptor to top of extension using suffix number for extension height. Example: Fig. 8225 w/6" ext. -Specify Fig. 8225 (-E06).

** For any fraction of an inch, go to next inch for pricing. (Example: 11 1/2", price for 12")
If Extension **exceeds 10" and/or interceptor requires a different cover**, contact Sales Engineering to see if reinforcement is needed. Additional charges will apply.

REGULARLY FURNISHED: Steel Interceptor and Extension with Gray Duco Coating Inside and Outside and Flow Control Fitting.

NOTE: It is the responsibility of the installer to check all parts (internal & external) to verify they are in their proper operating order & locations.

NOTE: If any dimension is larger than 92" or if any single item weighs more than 3,500 lbs., this would be an oversized and/or overweight product and our standard FFA terms may not apply. **Please contact our shipping department for additional shipping charges**.

†REGULARLY FURNISHED

FIG. 8300 SERIES STEEL GREASE INTERCEPTORS WITH RECEIVING CRADLE

FUNCTION: The all steel receiving cradle provides positive support for the interceptor and vertical adjustability for the inlet and outlet connections to meet the drainage piping. The receiving cradle can be set in the slab at the time of pouring or set in a pre-sleeved opening in the rough slab. The cradle is secured and suspended in the rough slab by its anchoring flange.The interceptor is lowered into the receiving cradle and adjusted to the elevation of the drainage piping. Interceptor is readily accessible for cleaning and inspection simply by removing the cradle cover which sits flush with floor. The cradle supports the interceptor and has no provisions for waterproofing the interceptor in relation to the cradle and ceiling below.

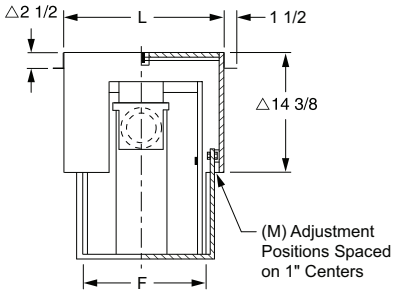

FRONT VIEW

OPTIONS: **ADD**

-AC Aluminum Cover on Interceptor ..... **POA**
-ACC Aluminum Cover on Cradle..... **POA**
Y No-Hub Adaptor (2 req'd) ..... **See Fig. 2646Y for list add**

△**NOTE**: When tile top is specified, add 1".
When Terrazzo top is specified, add 1 1/4".

Figs. 8007 thru 8050 carry the Plumbing and Drainage Institute Certification Seal Certifying conformance to Grease Interceptor Standard PDI-G101.

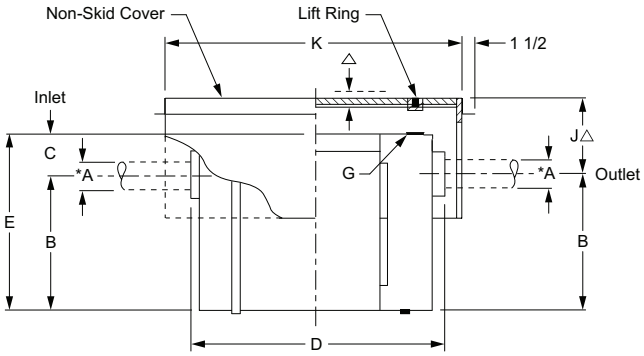

SIDE VIEW
Fig. 8335 Shown

FIGURE NO.	GPM FLOW RATE	GREASE CAP. LBS.	INLET & OUTLET SIZE A	ROUGHING DIM B	ROUGHING DIM C	ROUGHING DIM D	BODY E HEIGHT	BODY F WIDTH	C.O. PLUG SIZE G	CRADLE DIM J △ MIN	CRADLE DIM J △ MAX	CRADLE DIM K LENGTH	CRADLE DIM L WIDTH	CRADLE DIM M	†DUCO COAT INSIDE AND OUTSIDE	INTERC. •▲ w/ARC IN OR OUT -ARI	INTERC. •▲w/ARC IN AND OUT -ARIO	ADD FOR: ▲ -ARC (CRADLE)	ADD FOR: LIFT OUT SEDIMENT BKT (-B)	ADD FOR: DRIP PAN (-W)	APPROX. WT. LBS.
8304	4	8	02"	7 3/4"	3 1/4"	16 3/4"	11"	10"	2"	6 3/4"	17 3/4"	27 1/4"	19 1/4"	12"	**10,671.00**	**15,366.00**	**15,765.00**	**3,519.00**	**2,294.00**	**1,064.00**	170
8307	7	14	02"	8 1/2"	3 1/2"	19"	12"	10 3/4"	2"	7"	17"	27 1/4"	19 1/4"	12"	**13,011.00**	**17,794.00**	**18,212.00**	**3,519.00**	**2,294.00**	**1,302.00**	180
8310	10	20	02"	9 1/2"	3 3/4"	21 1/4"	13 1/4"	13"	2"	7"	16"	27 1/4"	19 1/4"	12"	**14,151.00**	**19,230.00**	**19,678.00**	**3,519.00**	**2,294.00**	**1,413.00**	215
8315	15	30	02"	12"	3 1/2"	25"	15 1/2"	14"	2"	7 1/2"	18 1/2"	34 3/4"	22 3/4"	13"	**17,328.00**	**22,804.00**	**23,394.00**	**3,519.00**	**2,294.00**	**1,666.00**	270
8320	20	40	03"	13"	4"	28 1/2"	17"	15 3/4"	2"	7 1/2"	17 1/2"	34 3/4"	22 3/4"	13"	**19,692.00**	**25,367.00**	**26,183.00**	**3,519.00**	**2,351.00**	**1,966.00**	290
8325	25	50	03"	15 1/4"	4 1/2"	30"	19 3/4"	16 3/4"	2"	7 1/2"	19 1/2"	41 3/4"	28 1/4"	13"	**21,135.00**	**27,100.00**	**28,057.00**	**5,079.00**	**2,484.00**	**2,111.00**	320
*8335	35	70	03"	16"	5"	32 1/2"	21"	18 1/4"	2"	8 1/4"	18 3/4"	41 3/4"	28 1/4"	13"	**24,130.00**	**30,564.00**	**31,666.00**	**5,079.00**	**2,659.00**	**2,777.00**	345
*8350	50	100	03"	17 1/2"	6 3/4"	35 1/2"	24 1/4"	20 3/4"	2"	10 1/4"	17 1/4"	41 3/4"	28 1/4"	13"	**29,050.00**	**37,486.00**	**38,954.00**	**5,079.00**	**3,977.00**	**2,903.00**	410

*Available with **one** size larger inlet and outlet when specified. No charge.
•Acid Resistant Coating on **Interceptor only**.
▲ When ARO or ARIO is specified, -ARC must also be specified.

REGULARLY FURNISHED: Steel Interceptor and Receiving Cradle with Gray Duco Coating Inside and Outside and Flow Control Fitting.

NOTE: Whenever an interceptor is to be installed suspended in a floor slab with a cradle or independently, proper support is essential for safety and functional integrity of the installation. Supports / support system shall be of sufficient strength and proper design for the purpose intended and meet the approval of the architect and structural engineer. Jay R. Smith Mfg. Co. is not responsible for the design or recommendation of such supports. Upon request, Jay R. Smith Mfg. Co. will provide the weight of the specific unit. Additional weight must be added to compensate for the weight of the liquid / grease when full and in the flowing mode of operation.

NOTE: It is the responsibility of the installer to check all parts (internal & external) to verify they are in their proper operating order & locations.

NOTE: If any dimension is larger than 92" or if any single item weighs more than 3,500 lbs., this would be an oversized and/or overweight product and our standard FFA terms may not apply. **Please contact our shipping department for additional shipping charges**.

†REGULARLY FURNISHED

INTERCEPTORS

FIG. 8300GT SER. STEEL GREASE INTERCEPTORS W/SEMI-AUTOMATIC DRAW-OFF & RECEIVING CRADLE

FUNCTION: The all steel receiving cradle provides nesting for the grease interceptor and vertical adjustability for the inlet/outlet connections.

WATERPROOFING: There are no provisions for waterproofing the cradle or interceptor. A drip pan (by others) is recommended for installations where units are installed suspended in an above grade floor structure above a ceiling.

STRUCTURAL SUPPORTS: Whenever an interceptor is to be installed suspended in a floor slab with a cradle or independently, proper support is essential for safety and functional integrity of the installation. The structural support/support system shall be of sufficient strength and proper design for the purpose of supporting the when a full capacity and meet the approval of the architect and structural engineer. Jay R. Smith Mfg. Co. is not responsible for the design or recommendation of such supports/systems. Additional support must be added to compensate for the weight of the liquid/grease when in the flowing mode or static mode.

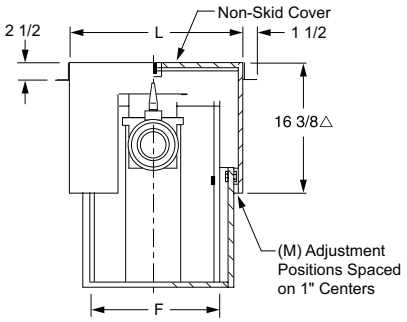

FRONT VIEW

OPTIONS: **ADD**

-AC	Aluminum Cover on Interceptor	**POA**
-ACC	Aluminum Cover on Cradle	**POA**
Y	No-Hub Adaptor (2 req'd)	**See Fig. 2646Y for list add**
	With Bronze Line Shut-off Valve	**POA**

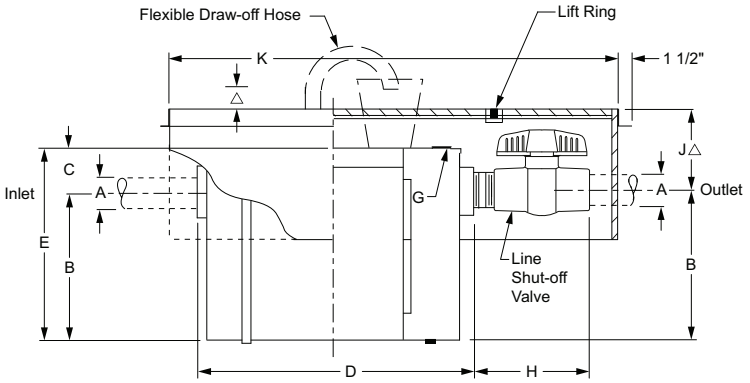

SIDE VIEW
Fig. 8335GT Shown

△ NOTE: When tile top is specified, add 1". When Terrazzo top is specified, add 1 1/4".

FIGURE NO.	GPM FLOW RATE	GREASE CAP. LBS.	INLET & OUTLET SIZE A*	ROUGHING DIM B	ROUGHING DIM C	ROUGHING DIM D	BODY E HEIGHT	BODY F WIDTH	C.O. PLUG SIZE G	LINE SHUT-OFF VALVE H	CRADLE DIM J△ MIN	CRADLE DIM J△ MAX	CRADLE DIM **K LENGTH	CRADLE DIM L WIDTH	M	†DUCO COAT INSIDE AND OUTSIDE	INTERC. •▲w/ARC IN OR OUT -ARI	INTERC. •▲w/ARC IN AND OUT -ARIO	ADD FOR: ▲ -ARC (CRADLE)	ADD FOR: DRIP PAN (-W)	APPROX. WT. LBS.
8307GT	7	14	02"	8 1/2"	3 1/2"	19"	12"	10 3/4"	2"	6 3/4"	8"	19"	38 1/4"	19 1/4"	12"	**20,736.00**	**26,366.00**	**31,458.00**	**4,401.00**	**2,080.00**	180
8310GT	10	20	02"	9 1/2"	3 3/4"	21 1/4"	13 1/4"	13"	2"	6 3/4"	7"	18"	38 1/4"	19 1/4"	12"	**24,324.00**	**30,066.00**	**35,265.00**	**4,401.00**	**2,124.00**	215
8315GT	15	30	02"	12"	3 1/2"	25"	15 1/2"	14"	2"	6 3/4"	8 1/2"	20 1/2"	42 3/4"	22 3/4"	13"	**26,410.00**	**33,040.00**	**38,564.00**	**4,401.00**	**2,377.00**	245
8320GT	20	40	03"	13"	4"	28 1/2"	17"	15 3/4"	2"	10"	7 1/2"	19 1/2"	42 3/4"	22 3/4"	13"	**30,743.00**	**38,442.00**	**44,508.00**	**4,401.00**	**2,686.00**	312
8325GT	25	50	03"	15 1/4"	4 1/2"	30"	19 3/4"	16 3/4"	2"	10"	9 1/2"	21 1/2"	47 3/4"	25 3/4"	13"	**33,944.00**	**41,951.00**	**48,442.00**	**6,357.00**	**3,038.00**	386
8335GT	35	70	03"	16"	5"	32 1/2"	21"	18 1/4"	2"	10"	8 3/4"	20 3/4"	47 3/4"	25 3/4"	13"	**35,355.00**	**43,653.00**	**50,566.00**	**6,357.00**	**3,299.00**	325
8350GT	50	100	03"	17 1/2"	6 3/4"	35 1/2"	24 1/4"	20 3/4"	2"	10"	10 1/4"	19 1/4"	50 3/4"	28 1/4"	13"	**38,616.00**	**47,328.00**	**54,869.00**	**6,357.00**	**3,743.00**	362
8375GT	75	150	04"	21 1/2"	15 1/2"	50"	37"	30 1/2"	3"	12 3/4"	16"	25"	66 1/2"	38 1/4"	13"	**46,277.00**	**53,827.00**	**63,733.00**	**6,357.00**	**4,808.00**	419

•Acid Resistant Coating on **Interceptor only**.
**When specifying a larger Inlet & Outlet size, the "K" dimension must be increased.
▲ When ARO or ARIO is specified, -ARC must also be specified.

REGULARLY FURNISHED: Fabricated Steel Interceptor and Receiving Cradle with Gray Duco Coating Inside and Outside with Steel Cone, Flexible Draw-off Hose and Cap, Line Shut-off Valve and Flow Control Fitting.

NOTE: It is the responsibility of the installer to check all parts (internal & external) to verify they are in their proper operating order & locations.

NOTE: If any dimension is larger than 92" or if any single item weighs more than 3,500 lbs., this would be an oversized and/or overweight product and our standard FFA terms may not apply. **Please contact our shipping department for additional shipping charges**.

†REGULARLY FURNISHED

FIG. 8400 SERIES LARGE CAPACITY STEEL GREASE INTERCEPTORS

FUNCTION: Used in large kitchens or institutions where there is an anticipated high rate of discharge of grease and oil laden waste from the fixtures. Large fabricated steel units available from 75 to 500 gallons per minute are most adaptable to industrial applications such as food processing and packaging plants.

OPTIONS: **ADD**

-AC Aluminum Cover on Interceptor .....**POA**
Y No-Hub Adaptor (2 req'd) .....**See Fig. 2646Y for list add**
Inlet & Outlet, **One** Size Larger.....**901.00**

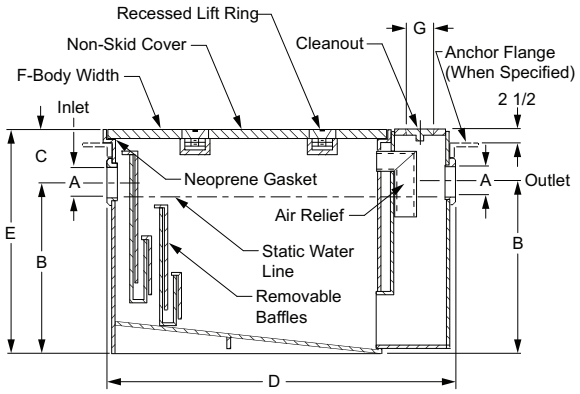

SIDE VIEW
Fig. 8450 Shown

▲Fig. 8450 and 8460 carry the Plumbing and Drainage Institute Certification Seal Certifying conformance to Grease Interceptor Standard PDI-G101.

FIGURE NO.	GPM FLOW RATE	GREASE CAP. LBS.	INLET & OUTLET SIZE A	ROUGHING DIM B	ROUGHING DIM C	ROUGHING DIM D	BODY E HEIGHT	BODY F WIDTH	C.O. PLUG SIZE G	†DUCO COAT	ADD FOR: H20 COVER	ADD FOR: ANCHOR FLANGE (-F)	ADD FOR: FLASHING FLANGE AND CLAMP (-FC)	ADD FOR: SEDIMENT BKT (-B)	APPROX. WT. LBS.
▲8450	75	150	04"	21 1/2"	15 1/2"	50"	37"	30 1/2"	3"	**35,482.00**	**11,271.00**	**2,591.00**	**4,701.00**	**4,373.00**	570
▲8460	100	200	04"	27"	16 1/2"	54"	43 1/2"	33 1/2"	3"	**39,922.00**	**15,512.00**	**2,895.00**	**5,261.00**	**4,773.00**	725
8465	150	300	05"	33"	17 1/2"	60 3/4"	50 1/2"	38 1/2"	4"	**44,346.00**	**19,915.00**	**4,042.00**	**6,517.00**	**5,010.00**	1,000
8470	200	400	05"	37"	17 1/2"	67 3/4"	54 1/2"	43 1/2"	4"	**64,309.00**	**22,716.00**	**4,338.00**	**7,610.00**	**5,262.00**	1,430
8475	250	500	05"	40"	18"	73 3/4"	58"	47 1/2"	4"	**74,874.00**	**31,359.00**	**5,777.00**	**10,266.00**	**5,554.00**	1,650
8480	350	700	05"	43 1/2"	18"	85 3/4"	61 1/2"	54 1/2"	4"	**98,020.00**	**47,469.00**	**7,308.00**	**12,274.00**	**7,010.00**	2,500
8490	500	1000	06"	48"	18"	103 1/4"	66"	64 1/2"	5"	**127,824.00**	**66,796.00**	**8,676.00**	**14,596.00**	**8,314.00**	3,000

REGULARLY FURNISHED: Steel Interceptor with Gray Duco Coating Inside and Outside and Flow Control Fitting.

For after the fact extensions only

Extensions for these interceptors (after the fact) will require a new cover as well. Please contact Jay R. Smith Sales Dept. for pricing.

NOTE: It is the responsibility of the installer to check all parts (internal & external) to verify they are in their proper operating order & locations.

NOTE: If any dimension is larger than 92" or if any single item weighs more than 3,500 lbs., this would be an oversized and/or overweight product and our standard FFA terms may not apply. **Please contact our shipping department for additional shipping charges**.

†REGULARLY FURNISHED

INTERCEPTORS

FIG. 8400E SERIES LARGE CAPACITY STEEL GREASE INTERCEPTORS W/INTEGRAL EXTENSION**

FUNCTION: Used in large kitchens or institutions where there is an anticipated high rate of discharge of grease and oil laden waste from the fixtures. Large fabricated steel units available from 75 to 500 gallons per minute are most adaptable to industrial applications such as food processing and packaging plants. Integral extension permits a greater dimension from center line of inlet and outlet to finished floor level to accommodate deeper roughing conditions. "X" dimension should always be specified when ordering.

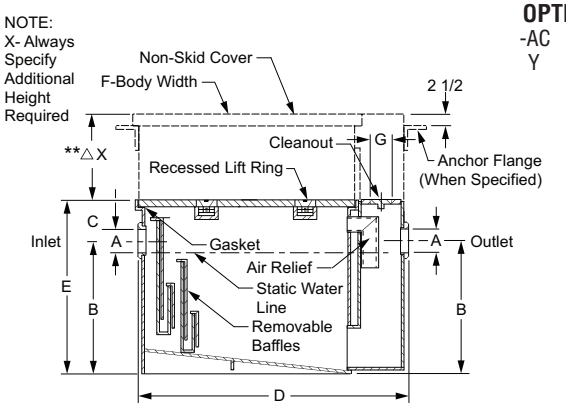

SIDE VIEW
Fig. 8450E Shown

OPTIONS: **ADD**

-AC	Aluminum Cover on Interceptor	**POA**
Y	No-Hub Adaptor (2 req'd)	**See Fig. 2646Y for list add**
	Inlet & Outlet, **One** Size Larger	**901.00**

▲Fig. 8450E and 8460E carry the Plumbing and Drainage Institute Certification Seal Certifying conformance to Grease Interceptor Standard PDI-G101.

FIGURE NO.	GPM FLOW RATE	GREASE CAP. LBS.	INLET & OUTLET SIZE A	ROUGHING DIM B	ROUGHING DIM C	ROUGHING DIM D	BODY E HEIGHT	BODY F WIDTH	C.O. PLUG SIZE G	†△ DUCO COAT W/ UP TO 10" EXT.	ADD FOR: **EACH ADD'L 1" OF EXT.	ADD FOR: H20 COVER	ADD FOR: ANCHOR FLANGE (-F)	ADD FOR: FLASHING FLANGE AND CLAMP (-FC)	ADD FOR: SEDIMENT BKT (-B)	APPROX. WT. LBS.
▲8450E	75	150	04"	21 1/2"	15 1/2"	50"	37"	30 1/2"	3"	**39,694.00**	**334.00**	**11,271.00**	**2,591.00**	**4,701.00**	**4,373.00**	675
▲8460E	100	200	04"	27"	16 1/2"	54"	43 1/2"	33 1/2"	3"	**44,657.00**	**353.00**	**15,512.00**	**2,895.00**	**5,261.00**	**4,773.00**	870
8465E	150	300	05"	33"	17 1/2"	60 3/4"	50 1/2"	38 1/2"	4"	**49,609.00**	**406.00**	**19,915.00**	**4,042.00**	**6,517.00**	**5,010.00**	1,200
8470E	200	400	05"	37"	17 1/2"	67 3/4"	54 1/2"	43 1/2"	4"	**73,787.00**	**422.00**	**22,716.00**	**4,338.00**	**7,610.00**	**5,262.00**	1,630
8475E	250	500	05"	40"	18"	73 3/4"	58"	47 1/2"	4"	**86,652.00**	**465.00**	**31,359.00**	**5,777.00**	**10,266.00**	**5,554.00**	1,875
8480E	350	700	05"	43 1/2"	18"	85 3/4"	61 1/2"	54 1/2"	4"	**114,370.00**	**585.00**	**47,469.00**	**7,308.00**	**12,274.00**	**7,010.00**	2,750
8490E	500	1000	06"	48"	18"	103 1/4"	66"	64 1/2"	5"	**152,395.00**	**703.00**	**66,796.00**	**8,676.00**	**14,596.00**	**8,314.00**	3,250

△ Specify Extension Height when ordering, measuring from top of interceptor to top of extension.

** For any fraction of an inch, go to next inch for pricing. (Example: 11 1/2", price for 12")
If Extension **exceeds 10" and/or interceptor requires a different cover**, contact Sales Engineering to see if reinforcement is needed. Additional charges will apply.

Extensions for these interceptors **(after the fact)** will require a new cover as well. Please contact Jay R. Smith Sales Dept. for pricing.

REGULARLY FURNISHED: Steel Interceptor with Gray Duco Coating Inside and Outside and Flow Control Fitting. Extension Height as Specified.

NOTE: It is the responsibility of the installer to check all parts (internal & external) to verify they are in their proper operating order & locations.

NOTE: If any dimension is larger than 92" or if any single item weighs more than 3,500 lbs., this would be an oversized and/or overweight product and our standard FFA terms may not apply. **Please contact our shipping department for additional shipping charges**.

†REGULARLY FURNISHED

FIG. 8510, 8510E SERIES STEEL OIL INTERCEPTORS

FUNCTION: Fig. 8510, Used in service stations, parking garages, and industrial plants where discharged water contains oil and sediment. Interceptor collects oil and conveniently permits the collected oil to be drained to a storage tank by means of an adjustable gravity draw-off connection. Sediment and chips are collected in sediment bucket and should be periodically removed. Interceptors should not be located directly in traffic areas. If required, specify extra heavy duty traffic cover.
Fig. 8510E, Interceptors with extensions are installed recessed in the floor with cover flush with finished floor. Extension provides additional roughing depth from top of interceptor to centerline of inlet and outlet. Extension should not be used as a means for supporting the assembly. The entire interceptor body and extension must rest on solid ground or suitable support hangers.

OPTIONS: **ADD**

Y No-Hub Adaptor (4 req'd) .....**See Fig. 2646Y for list add**
*Inlet & Outlet, **One** Size Larger .....**N/C**
02"-04" **2,348.00**
03"-05" **5,897.00**

If purchasing the extension alone, contact engineering to determined if cover is also needed: **LIST**

8510E06 .....**5,896.00**
8515E06 .....**6,066.00**
8520E06 .....**6,066.00**
8525E06 .....**6,461.00**
8535E06 .....**7,244.00**
8550E06 .....**7,833.00**

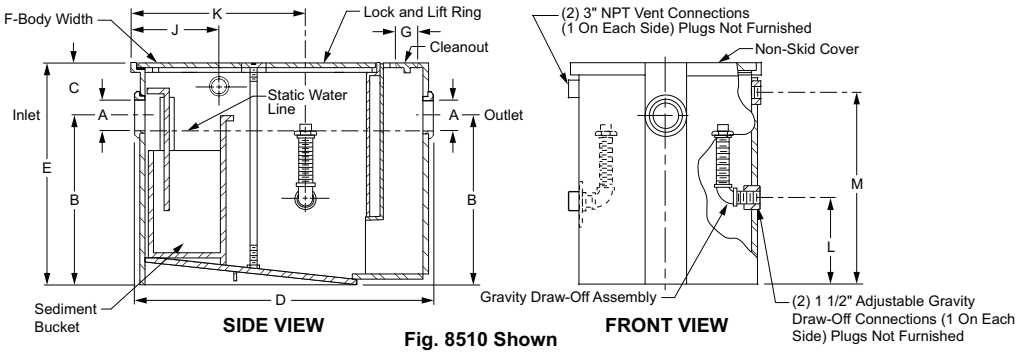

Fig. 8510 Shown

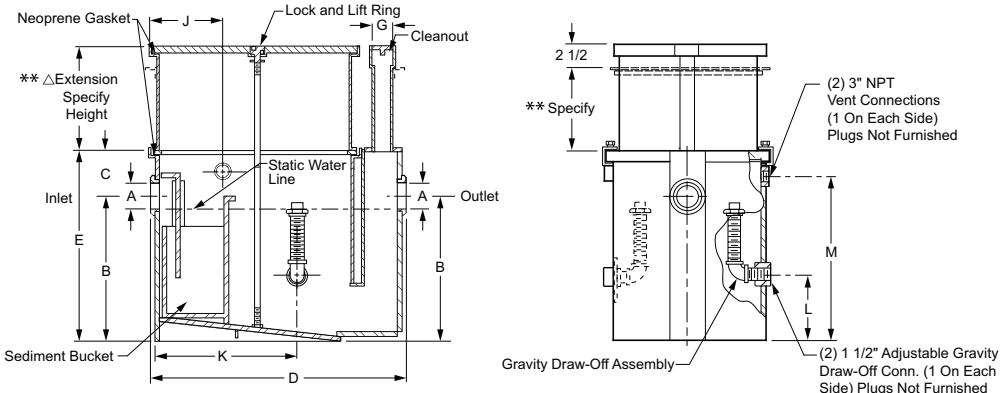

Fig. 8510E Shown

NOTE: 2" must be added to dimensions D & F when extension is specified for clearance of extension clamps.

NOTE: It is the responsibility of the installer to check all parts (internal & external) to verify they are in their proper operating order & locations.

NOTE: Interceptor shall be vented on outlet side per local code requirements.

NOTE: 2" minimum extension available. Anchor flange & flashing clamp not available on less than 4" extension.

NOTE: If any dimension is larger than 92" or if any single item weighs more than 3,500 lbs., this would be an oversized and/or overweight product and our standard FFA terms may not apply. **Please contact our shipping department for additional shipping charges**.

FIG. NO.	GPM FLOW RATE	INLET & OUTLET SIZE A	ROUGHING DIM B	ROUGHING DIM C	ROUGHING DIM D	BODY E HEIGHT	BODY F WIDTH	C.O. PLUG SIZE G	J	K	L	M	†STEEL DUCO COATED	INTERC. △ WITH 4 TO 6" EXT (-E) DUCO COATED	ADD FOR: **EA 1" EXT OVER 6"	ADD FOR: ANCHOR FLANGE (-F) (W/EXT ONLY)	ADD FOR: FLANGE AND FLASH CLAMP (-FC) (W/EXT ONLY)	ADD FOR: H20 COVER	ADD FOR: ALUM COVER (-AC)	APPROX. WT. LBS.
8510	10	02"	9 1/2"	3 3/4"	21 1/4"	13 1/4"	11 1/2"	2"	9 1/2"	12"	4"	9 3/4"	**7,790.00**	**13,686.00**	**294.00**	**1,839.00**	**2,214.00**	**7,673.00**	**1,744.00**	100
8515	15	*02"	12"	3 1/2"	25"	15 1/2"	13 1/2"	2"	10 1/4"	14 1/4"	5 3/4"	12"	**10,338.00**	**16,404.00**	**334.00**	**1,839.00**	**2,214.00**	**8,252.00**	**1,744.00**	110
8520	20	*03"	13"	4"	28 1/2"	17"	15 3/4"	2"	12"	16 1/2"	4 1/2"	13 1/2"	**12,142.00**	**18,208.00**	**370.00**	**1,986.00**	**2,360.00**	**8,738.00**	**2,444.00**	125
8525	25	*03"	15 1/4"	4 1/2"	30"	19 3/4"	16 3/4"	2"	12 3/4"	18 3/4"	6 1/4"	16 1/4"	**13,462.00**	**19,923.00**	**422.00**	**2,068.00**	**2,469.00**	**9,225.00**	**2,444.00**	145
8535	35	*03"	16"	5"	32 1/2"	21"	18 1/4"	2"	14 1/2"	21 1/4"	7"	17 1/2"	**16,171.00**	**23,415.00**	**465.00**	**2,169.00**	**2,570.00**	**10,192.00**	**2,444.00**	175
8550	50	*03"	17 1/2"	6 3/4"	35 1/2"	24 1/4"	20 3/4"	2"	16"	22"	7 1/2"	20 3/4"	**21,802.00**	**29,635.00**	**541.00**	**2,214.00**	**2,913.00**	**10,678.00**	**2,444.00**	215

* Available with larger inlet and outlet when specified. See pricing above.
△ Specify Extension Height when ordering, measuring from top of interceptor to top of extension.
** For any fraction of an inch, go to next inch for pricing. (Example: 11 1/2", price for 12")
If Extension exceeds 10" and/or interceptor requires a different cover, contact Sales Eng. to see if reinforcement is needed. Additional charges will apply.

REGULARLY FURNISHED: Fig. 8510, Steel Interceptor with Gray Duco Coating Inside and Outside and Flow Control Fitting.
Fig. 8510E, Steel Interceptor and Extension with Gray Duco Coating Inside and Outside and Flow Control Fitting.

†REGULARLY FURNISHED

INTERCEPTORS

FIG. 8560, 8560E SERIES LARGE CAPACITY STEEL OIL INTERCEPTORS

FUNCTION: Large capacity oil interceptors are used in large garages, service areas and industrial plants where waste laden with oil and sediment must be intercepted. The intercepted oils are drawn off by gravity to a storage tank or container. Any sediment which is included in the discharge is collected in a large sediment bucket and periodically removed. Interceptors should not be located directly in traffic areas. If required, specify extra heavy duty traffic cover.

OPTIONS: **ADD**

-AC Aluminum Cover on Interceptor ..... **POA**
Y No-Hub Adaptor (4 req'd) ..... **See Fig. 2646Y for list add**
*Inlet & Outlet, **One** Size Larger..... **901.00**

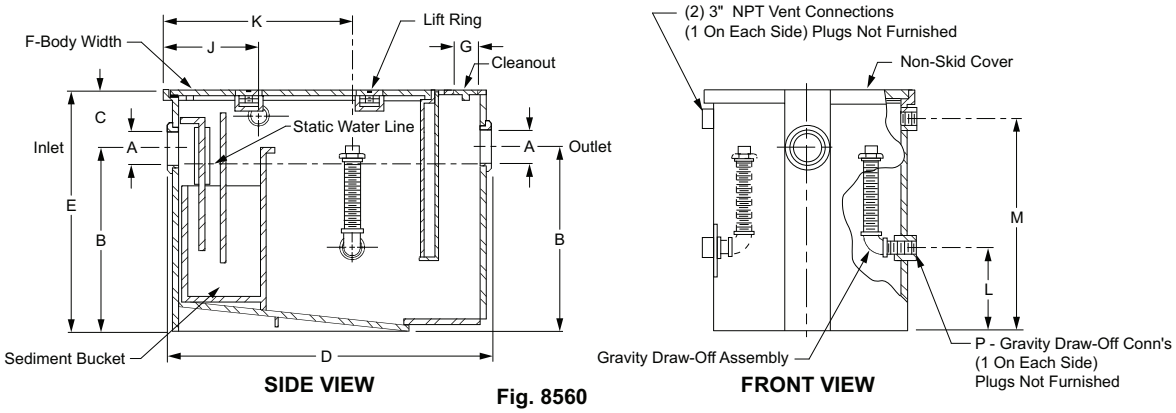

SIDE VIEW **FRONT VIEW**

Fig. 8560

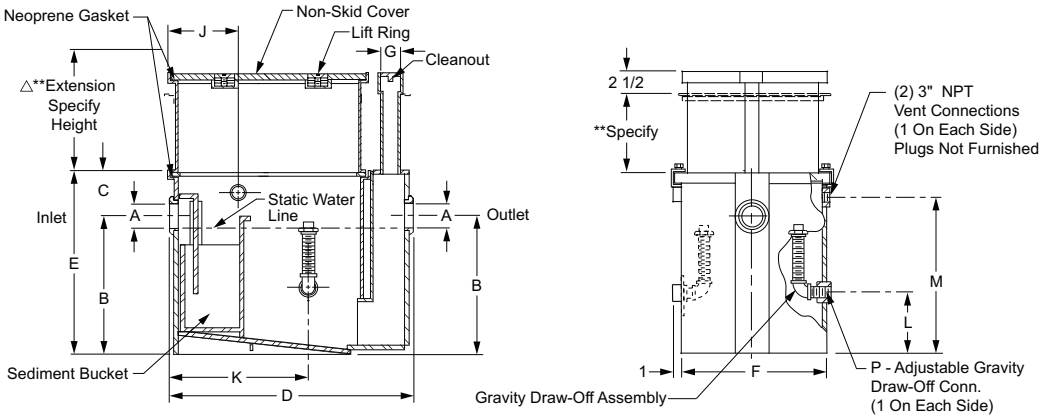

SIDE VIEW **FRONT VIEW**

Fig. 8560E

FIGURE NO.	GPM FLOW RATE	INLET & OUTLET SIZE *A	ROUGHING DIM B	ROUGHING DIM C	ROUGHING DIM D	BODY E HEIGHT	BODY F WIDTH	C.O. PLUG SIZE G	J	K	L	M	DRAW-OFF P	†STEEL DUCO COATED	INTERC. △ WITH UP TO 10" EXT. (-E)	ADD FOR: **EA 1" EXT. OVER 10"	ADD FOR: H20 COVER	ADD FOR: ANCHOR FLANGE (-F)	ADD FOR: FLANGE AND FLASH CLAMP (-FC)	APPROX. WT. LBS.
8560	75	04"	21 1/2"	15 1/2"	50"	37"	30 1/2"	3"	21"	28 1/4"	13"	32 3/4"	2"	**40,070.00**	**44,282.00**	**334.00**	**11,271.00**	**2,591.00**	**4,701.00**	610
8565	100	04"	27"	16 1/2"	54"	43 1/2"	33 1/2"	3"	23"	30 1/4"	18 1/2"	39 1/4"	2"	**44,920.00**	**49,655.00**	**353.00**	**15,512.00**	**2,895.00**	**5,261.00**	775
8570	150	05"	33"	17 1/2"	60 3/4"	50 1/2"	38 1/2"	4"	25 1/2"	34 1/4"	23 1/2"	46 1/4"	2 1/2"	**49,576.00**	**54,839.00**	**406.00**	**19,915.00**	**4,042.00**	**6,517.00**	1,000
8575	200	05"	37"	17 1/2"	67 3/4"	54 1/2"	43 1/2"	4"	29"	38 1/4"	27 1/2"	50 1/4"	2 1/2"	**69,794.00**	**79,272.00**	**422.00**	**22,716.00**	**4,338.00**	**7,610.00**	1,310
8580	250	05"	40"	18"	73 3/4"	58"	47 1/2"	4"	32"	42 1/4"	30 1/2"	53 3/4"	2 1/2"	**80,652.00**	**92,430.00**	**465.00**	**31,359.00**	**5,777.00**	**10,266.00**	1,680
8585	350	05"	43 1/2"	18"	85 3/4"	61 1/2"	54 1/2"	4"	38"	50 1/4"	34"	57 1/4"	2 1/2"	**105,254.00**	**121,604.00**	**585.00**	**47,469.00**	**7,308.00**	**12,274.00**	2,449
8590	500	06"	48"	18"	103 1/4"	66"	64 1/2"	5"	46"	62 1/4"	38"	61 3/4"	2 1/2	**136,363.00**	**160,934.00**	**703.00**	**66,796.00**	**8,676.00**	**14,596.00**	2,900

* Available with larger inlet and outlet when specified. See pricing above or contact the factory.
△ Specify Extension Height when ordering, measuring from top of interceptor to top of extension.
** For any fraction of an inch, go to next inch for pricing. (Example: 11 1/2", price for 12")
If Extension **exceeds 10" and/or interceptor requires a different cover**, contact Sales Engineering to see if reinforcement is needed. Additional charges will apply.
Extensions for these interceptors **(after the fact)** will require a new cover as well. Please contact Jay R. Smith Sales Dept. for pricing.

REGULARLY FURNISHED: **Fig. 8560,** Steel Interceptor with Gray Duco Coating Inside and Outside and Flow Control Fitting. **Fig. 8560-E,** Steel Interceptor and Extension with Gray Duco Coating Inside and Outside and Flow Control Fitting.

NOTE: It is the responsibility of the installer to check all parts (internal & external) to verify they are in their proper operating order & locations.

NOTE: Interceptor shall be vented on outlet side per local code requirements.

NOTE: 2" minimum extension available. Anchor flange & flashing clamp not available on less than 4" extension.

NOTE: If any dimension is larger than 92" or if any single item weighs more than 3,500 lbs., this would be an over-sized and/or overweight product and our standard FFA terms may not apply. **Please contact our shipping department for additional shipping charges**.

†REGULARLY FURNISHED

FIG. 8599 SERIES OIL INTERCEPTORS WITH INTEGRAL STORAGE COMPARTMENT

FUNCTION: Used in service stations, parking garages and industrial plants where discharged water contains oil and sediment. Interceptor collects oil and conveniently permits the collected oil to be drained to the integral storage compartment by means of an adjustable gravity draw-off connection. Sediment and chips are collected in the sediment bucket and should be periodically removed. Interceptors should not be located directly in traffic areas. If required specify traffic rated cover.

OPTIONS:

		ADD
-CBS	High Level Sensor and Control Panel	POA
-DWC	Double Wall Containment (Note 1)	POA
-H20	Traffic Rated Cover	POA
	4" Cleanout Access	POA
	Coal Tar Epoxy Inside	POA

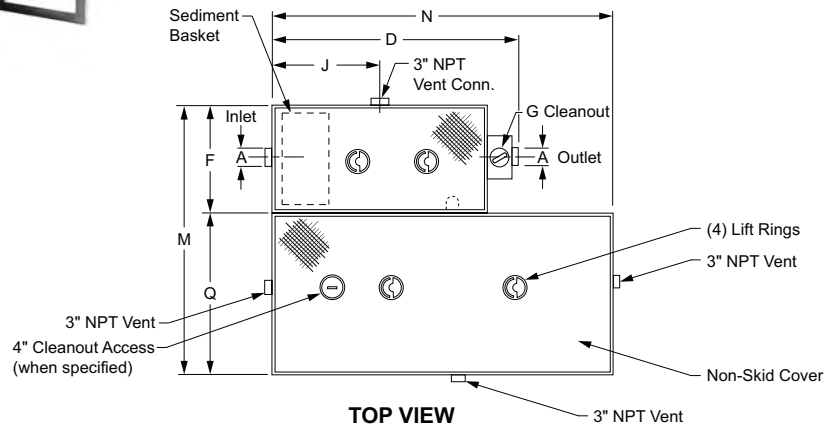

TOP VIEW

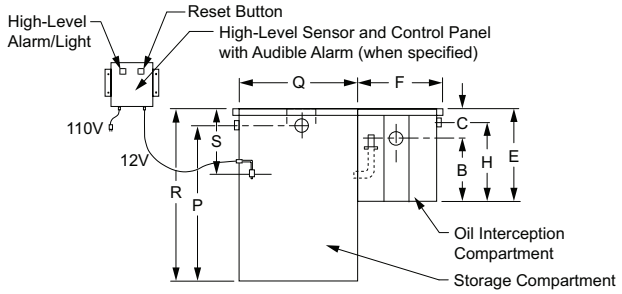

END VIEW

NOTES:
1. When double wall containment is specified, the overall dimensions change. Consult the factory for the double wall dimensions.
2. Interceptor shall be vented on outlet side per local code requirements.

For after the fact extensions (Storage Tank only)
Extensions for these units (after the fact) will require a new cover as well. Please contact Jay R. Smith Sales Dept. for pricing.

	OIL INTERCEPTOR COMPARTMENT										STORAGE TANK COMPARTMENT							†FAB STEEL	APPROX.
MODEL NUMBER	GPM	*A	B	C	D	E	F	G	H	J	GALS. CAP.	M	N	P	Q	R	S	DUCO COATED	WT. LBS.
● 8599-10-5	10	02"	9 1/2"	3 3/4"	21 1/4"	13 1/4"	13"	2"	9 3/4"	9 1/2"	5	24"	21 1/4"	10 1/4"	11"	13 1/4"	9 1/4"	POA	120Δ
8599-10-50	10	02"	9 1/2"	3 3/4"	21 1/4"	13 1/4"	13"	2"	9 3/4"	9 1/2"	50	25"	30"	50 3/4"	12"	55"	9 1/4"	POA	400Δ
8599-15-50	15	02"	12"	3 1/2"	25"	15 1/2"	14"	2"	12"	10 1/4"	50	26"	30"	50 3/4"	12"	55"	9 3/4"	POA	415Δ
8599-20-50	20	03"	13"	4"	28 1/2"	17"	15 3/4"	2"	13 1/2"	12"	50	27 3/4"	30"	50 3/4"	12"	55"	12 1/2"	POA	430Δ
8599-25-100	25	03"	15 1/4"	4 1/2"	30"	19 3/4"	16 3/4"	2"	16 1/4"	12 3/4"	100	31 3/4"	50 3/4"	56 3/4"	15"	61"	13 1/2"	POA	700Δ
8599-35-100	35	03"	16"	5"	32 1/2"	21"	18 1/4"	2"	17 1/2"	14 1/2"	100	33 1/4"	50 3/4"	56 3/4"	15"	61"	14"	POA	725Δ
8599-50-100	50	03"	17 1/2"	6 3/4"	35 1/2"	24 1/4"	20 3/4"	2"	20 3/4"	16"	100	36 1/4"	50 3/4"	56 3/4"	15"	61"	16 3/4"	POA	750Δ
8599-75-100	75	04"	21 1/2"	15 1/2"	50 3/4"	37"	30 1/2"	3"	32 3/4"	21"	100	45 1/2"	50 3/4"	56 3/4"	15"	61"	24"	POA	850Δ
8599-100-250	100	04"	27"	16 1/2"	54 3/4"	43 1/2"	33 1/2"	3"	39 1/4"	23"	250	58 1/2"	60 3/4"	60 3/4"	25"	65"	25"	POA	1950Δ
8599-150-250	150	05"	33"	17 1/2"	60 3/4"	50 1/2"	38 1/2"	4"	46 1/4"	25 1/2"	250	63 1/2"	60 3/4"	60 3/4"	25"	65"	27"	POA	2026Δ
8599-200-250	200	05"	37"	17 1/2"	67 3/4"	54 1/2"	43 1/2"	4"	50 1/4"	29"	250	68 1/2"	60 3/4"	60 3/4"	25"	65"	27"	POA	2200Δ
8599-250-500	250	05"	40"	18"	73 3/4"	58"	47 1/2"	4"	53 3/4"	32"	500	79 1/2"	90 3/4"	71 3/4"	32"	76"	27 1/2"	POA	3700Δ
8599-300-500	300	05"	43 1/2"	18"	85 3/4"	61 1/2"	54 1/2"	4"	57 1/4"	38"	500	86 1/2"	90 3/4"	71 3/4"	32"	76"	27 1/2"	POA	4000Δ
8599-350-500	350	05"	43 1/2"	18"	85 3/4"	61 1/2"	54 1/2"	4"	57 1/4"	38"	500	86 1/2"	90 3/4"	71 3/4"	32"	76"	27 1/2"	POA	4200Δ
8599-400-500	400	06"	43 1/2"	18"	85 3/4"	61 1/2"	54 1/2"	4"	57 1/4"	38"	500	86 1/2"	90 3/4"	71 3/4"	32"	76"	27 1/2"	POA	4400Δ
8599-450-500	450	06"	48"	18"	103 1/4"	66"	64 1/2"	5"	61 3/4"	46"	500	96 1/2"	90 3/4"	71 3/4"	32"	76"	28"	POA	4600Δ
8599-500-750	500	06"	48"	18"	103 1/4"	66"	64 1/2"	5"	61 3/4"	46"	750	99 1/2"	103 1/4"	83 3/4"	35"	88"	28"	POA	5100Δ

* Available w/larger inlet & outlet when specified. Contact the factory for pricing. ●Recommended for Elevator Pits.
Δ Additional shipping charges may apply. Contact our shipping department.

REGULARLY FURNISHED: Fabricated Steel with Diamond Plate Cover, Sediment Basket, Duco Coated Inside and Coal Tar Epoxy Outside, Complete with Flow Control Fitting.

NOTE: If any dimension is larger than 92" or if any single item weighs more than 3,500 lbs., this would be an oversized and/or overweight product and our standard FFA terms may not apply. **Please contact our shipping department for additional shipping charges**.

FOR INFORMATION ON POA ITEMS, PLEASE CONTACT YOUR LOCAL JAY R. SMITH REPRESENTATIVE

†REGULARLY FURNISHED

ULTRACEPT OIL/WATER SEPARATION SYSTEMS

FIG. 8600 SERIES

Figure No.	
8602-S	POA
8602-M	POA
8605-S	POA
8605-M	POA

Figure No.	
8610-S	POA
8610-M	POA
8625-S	POA
8625-M	POA
8645-S	POA
8645-M	POA

FOR INFORMATION ON POA ITEMS, PLEASE CONTACT YOUR LOCAL JAY R. SMITH REPRESENTATIVE

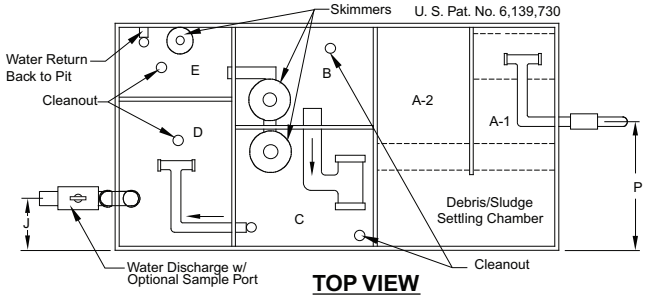

TOP VIEW

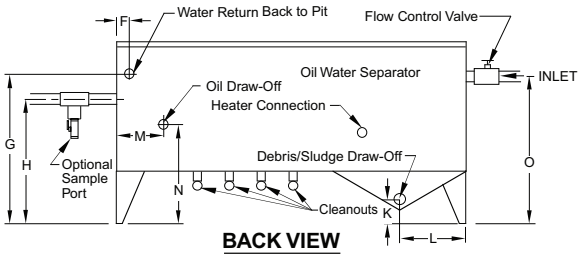

BACK VIEW

Model	Construction Material	Flow Rate GPM	Inlet	Outlet	Water Return	Sludge Draw-Off	Oil Outlet	Waste Oil Cap	Length	Width	Height	Weight	Water Volume
8602	S,M	2	1 1/2"	1 1/2"	1 1/2"	1 1/2"	1 1/2"	4 gal	36"	24"	36"	150 lbs	67 gal
8605	S,M	5	1 1/2"	1 1/2"	1 1/2"	1 1/2"	1 1/2"	12 gal	60"	36"	36"	600 lbs	168 gal

S = Stainless Steel M = Mild Steel

Model	F	G	H	J	K	L	M	N	O	P	Q
8602	4.00	31.00	28.5	10.00	12.00	6.32	8.00	24.56	34.25	21.00	12$^{3'}$
8605	5.125	25.7	25.7	2.5	4.47	12.07	12.00	16.7	33.32	18.00	45$^{3'}$

All Cleanouts and Water Return Lines are to be plumbed to a common 3" Line that goes back to Surge Pit. All external plumbing fittings are Sch. 40 PVC unless otherwise specified.

- A Inlet Compartment
- B Primary Skimming Compartment
- C Secondary Skimming Compartment
- D Final Polishing Compartment
- E Oil Collection Compartment
- F Water Return from Side
- G Water Return height from grade
- H Water Discharge height from grade
- J Water Discharge from side
- K Sludge draw-off height from grate
- L Sludge draw-off from side
- M Oil draw-off from side
- N Oil draw-off height from grade
- O Inlet height from grade
- P Inlet location from side
- Q Cubes (ft.)

NOTE: Ultracept® units exposed to freezing temperatures may require pipe insulation to be installed on exposed plumbing. Pipe insulation is by other

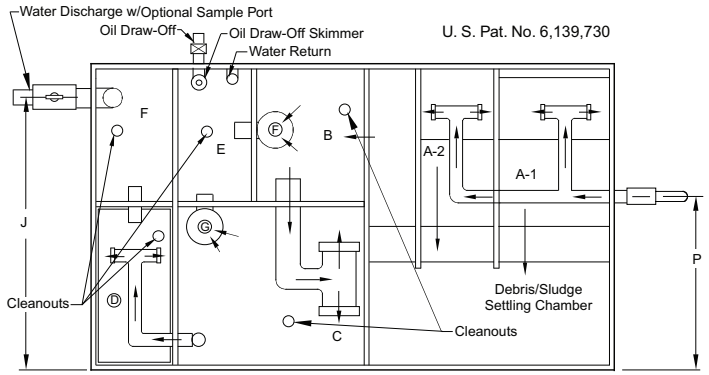

TOP VIEW

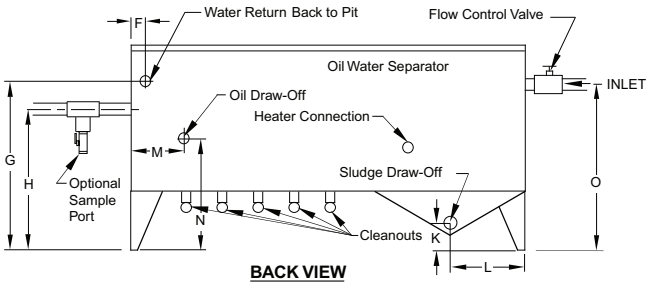

BACK VIEW

Model	Construction Material	Flow Rate GPM	Inlet	Outlet	Water Return	Sludge Draw-Off	Oil Outlet	Waste Oil Cap	Length	Width	Height	Weight	Water Volume
8610	S,M	10	2"	3"	1 1/2"	3"	1 1/2"	23 gal	72"	36"	48"	925 lbs	400 gal
8625	S,M	25	2"	3"	1 1/2"	3"	1 1/2"	29 gal	84"	48"	48"	1175 lbs	628 gal
8645	S,M	45	2"	3"	1 1/2"	3"	1 1/2"	35 gal	96"	48"	48"	1395 lbs	718 gal

S = Stainless Steel M = Mild Steel

Model	F	G	H	J	K	L	M	N	O	P	Q
8610	18.07	35.82	33.7	29.88	6.00	12.07	21.875	28.82	43.69	18.00	72
8625	18.99	31.70	33.70	6.00	6.00	18.07	23.875	21.70	43.57	24.00	112
8645	26.875	36.00	33.88	42.12	6.15	18.07	32.31	29.00	43.88	24.00	128

NOTE: Ultracept® units exposed to freezing temperatures may require pipe insulation to be installed on exposed plumbing. Pipe insulation is by others.

- A Inlet Compartment
- B Primary Skimming Compartment
- C Secondary Skimming Compartment
- D Final Polishing Compartment
- E Oil Collection Compartment
- F Water Return from Side
- G Water Return height from grade
- H Water Discharge height from grade
- J Water Discharge from side
- K Sludge draw-off height from grade
- L Sludge draw-off from side
- M Oil draw-off from side
- N Oil draw-off height from grade
- O Inlet height from grade
- P Inlet location from side
- Q Cubes (ft.)

All Cleanouts and Water Return Lines are to be plumbed to a common 3" Lin that goes back to Surge Pit. All external plumbing fittings are Sch. 40 PVC unless otherwise specified.

Industrial type facilities suffer from oily waste water problems from time to time. Federal and local regulations require that this waste water must be treated before it can be discharged into municipal sewers or subsurface waters.

The Ultracept Oil/ Water Separator by Jay R. Smith Mfg. Co. is designed to accomplish this task through a continuous skimming technique. The patented design uses the cohesive property of water and a multi-stage separation process to achieve high separation efficiency.

The Ultracept Oil/Water Separator is designed to be installed so that contaminated water is pumped from a surge pit into the Ultracept unit. The separator, having been filled with clean water prior to the startup, then uses the surface tension of the clean water to promote and enhance waster separation. The water then travels through a series of chambers for gravity discharge to a sanitary sewer or to a recycling system.

Features and Benefits:

- Available in stainless steel and epoxy coated steel
- Regularly furnished with a flow control valve and all required plumbing components
- Simple, above ground installation
- Low maintenance, no coalescing packs
- Meets discharge regulations
- All units come in either stainless steel (S) or Mild steel (M)
- All units have 1-1/2" water return and 1'1/2" oil outlet

FIG. 8710, 8714, 8715 SOLIDS INTERCEPTOR FLUSH W/FLOOR, ON-THE FLOOR OR FIG. 8730 SUSPENDED TYPE

FUNCTION: Provides a means of collecting solids such as metal chips, plaster and stones before entering the drain line preventing line stoppage. The Fig. 8710 and Fig. 8714 small capacity interceptors are ideal for dental offices or similar establishments where the unit can be mounted directly under the sink to recover precious metals as well as intercept harmful debris. Fig. 8715 larger capacity interceptors are ideal for hospitals where a greater amount of solids is anticipated in the drainage water. Fig. 8710 and Fig. 8715 units are cleaned by removing cover and lifting strainer and screen assembly vertically out of body. Fig. 8714 has an internal deep seal trap and is cleaned by removing cover and lifting sediment bucket vertically out of the body. The compact design of Fig. 8730 suspended type makes this unit particularly adaptable for use directly under the fixture in place of the regular "P" trap. Unit will intercept all types of solids and precious metals. Interceptor is cleaned and inspected by removing bottom sediment strainer plate and dropping entire assembly.

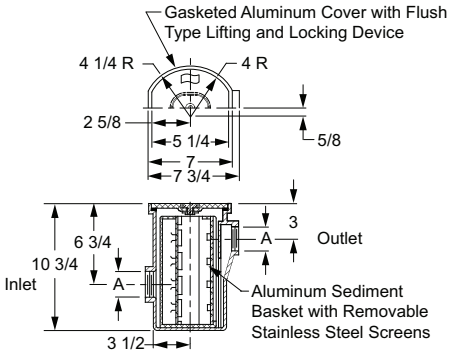

Fig. 8710

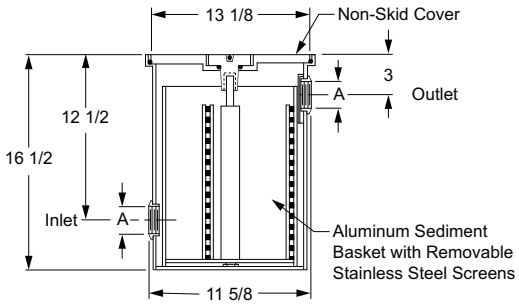

Fig. 8715

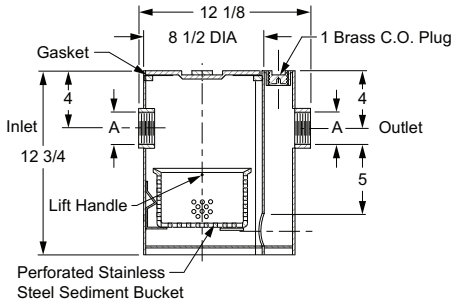

Fig. 8714

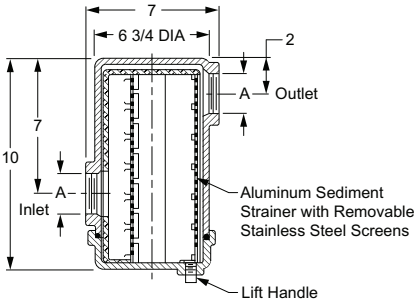

Fig. 8730

FLUSH WITH FLOOR OR ON-THE-FLOOR TYPE						
FIGURE NO.	INLET& OUTLET SIZE	†DUCO CI	W/ARC IN (ARI) OR OUT(ARO)	W/ARC IN & OUT(ARIO)	W/ALUM BODY (-AA)	APPROX. WT. LBS.
8710	0150 or 02"	**2,832.00**	**3,027.00**	**3,027.00**	**2,573.00**	25
8714	0150 or 02"	**2,832.00**	**3,027.00**	**3,027.00**	–	43
8715	0150 or 02"	**6,399.00**	**9,925.00**	**9,925.00**	–	140
SUSPENDED TYPE						
8730-CI	0150 or 02"	**2,832.00**	**3,027.00**	**3,027.00**	**2,573.00**	20

REGULARLY FURNISHED:

Fig. 8710 White Duco Coated Cast Iron Body with Aluminum Gasketed Cover and Sediment Strainer with Removable Stainless Steel Screens.

Fig. 8714, Fabricated Steel Body with Galvanized Sub-Coat with White Duco Finish Inside and Outside, Stainless Steel Perforated Bucket and Aluminum Cover.

Fig. 8715 Fabricated Steel Body with Galvanized Sub-Coat with White Duco Finish Inside and Outside, Sediment Strainer with Removable Stainless Steel Screens and Cast Iron Cover.

Fig. 8730, White Duco Coated Cast Iron Body and Aluminum Strainer with Removable Stainless Steel Screens.

NOTE:
8710: Allow 9 1/4" above interceptor for removal of strainer.
8714: Allow 4 1/2" above interceptor for removal of strainer.
8715: Allow 14 1/2" above interceptor for removal of strainer.
8730: Allow 8 1/2" above interceptor for removal of strainer.

NOTE: It is the responsibility of the installer to check all parts (internal & external) to verify they are in their proper operating order & locations.

†REGULARLY FURNISHED

FIG. 8710-ABS SOLIDS INTERCEPTORS

FUNCTION: Provides a means of collecting solids such as metal chips, plaster and stones before entering the drain line preventing line stoppage. The Fig. 8710 interceptor is ideal for dental offices or similar establishments where the unit can be mounted directly under the sink to recover precious metals as well as intercept harmful debris. Fig. 8710 is cleaned by removing cover and lifting strainer and screen assembly vertically out of body.

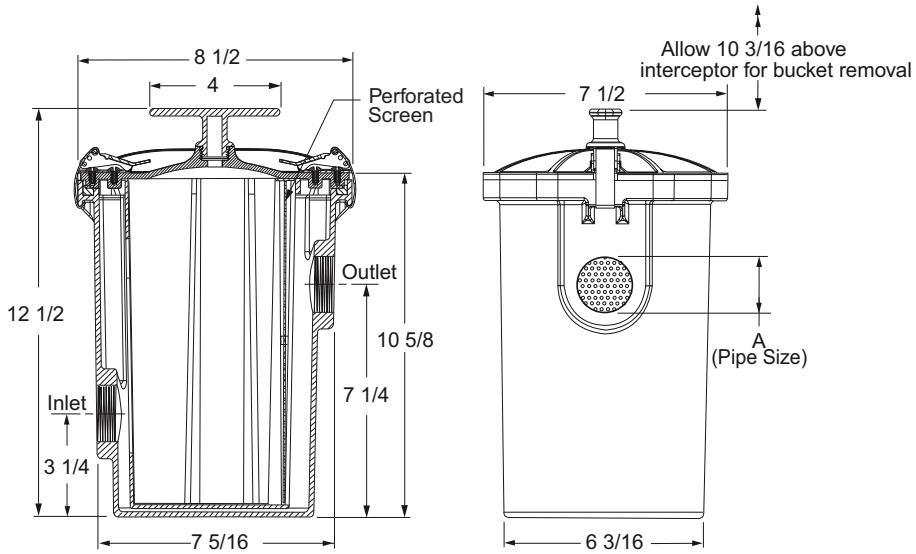

TYPICAL INSTALLATION

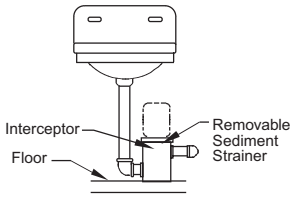

FIGURE NO.	INLET & OUTLET SIZE A	PRICE	APPROX. WEIGHT LBS.
8710-ABS	0150" or 02"	**1,834.00**	4

REGULARLY FURNISHED: All ABS White Body, Gasketed Cover with Stainless Steel Latches and Removeable Sediment Bucket with Removeable 3/32 Diameter Perforated Screen.

†REGULARLY FURNISHED

FIG. 8730-ABS SOLIDS INTERCEPTORS - SUSPENDED TYPE

FUNCTION: Compact design makes this unit particularly adaptable for use directly under the fixture in place of the regular “P” trap. Unit will intercept all types of solids and precious metals. Interceptor is cleaned and inspected by removing bottom sediment strainer plate and dropping entire assembly.

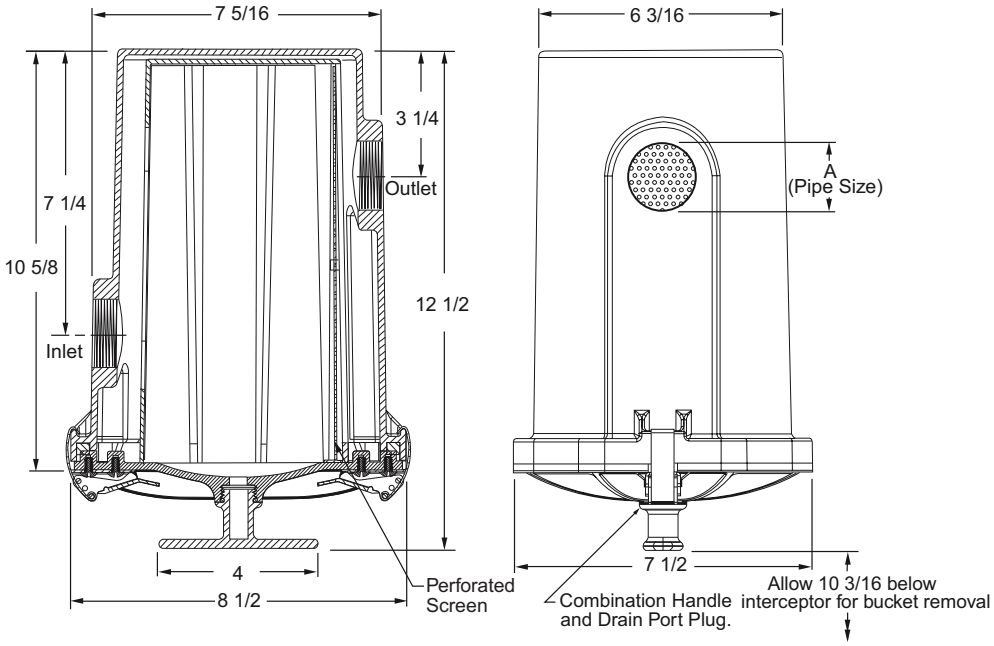

TYPICAL INSTALLATION

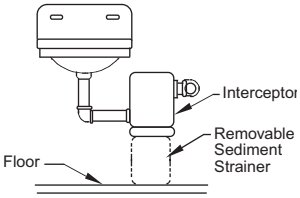

FIGURE NO.	INLET & OUTLET SIZE A	PRICE	APPROX. WEIGHT LBS.
8730-ABS	0150" or 02”	**1,834.00**	4

REGULARLY FURNISHED: All ABS White Body, Gasketed Cover with Stainless Steel Latches and Removeable Sediment Bucket with Removeable 3/32 Diameter Perforated Screen.

†REGULARLY FURNISHED

FIG. 8738 SIDE ACCESS SOLIDS INTERCEPTORS

FUNCTION: Provides a means of collecting solids in under sink installations where there are height restrictions for top removal. The side access cover requires no clearance above the unit for cover and bucket removal.

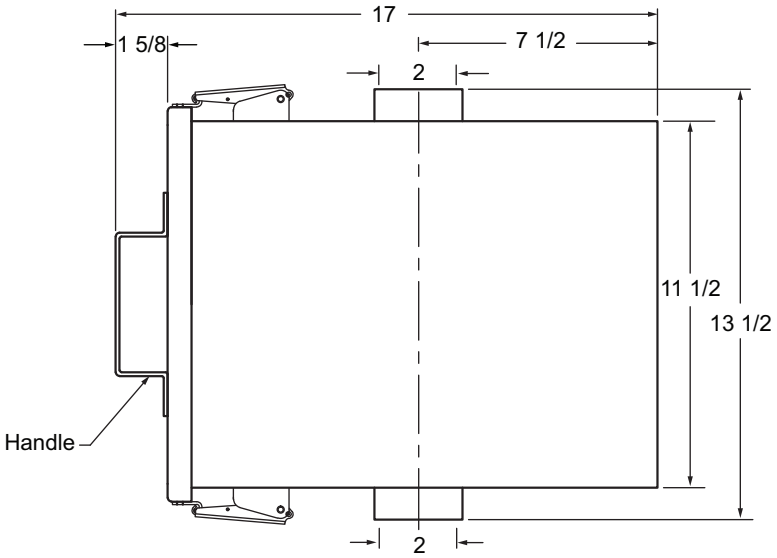

TOP VIEW

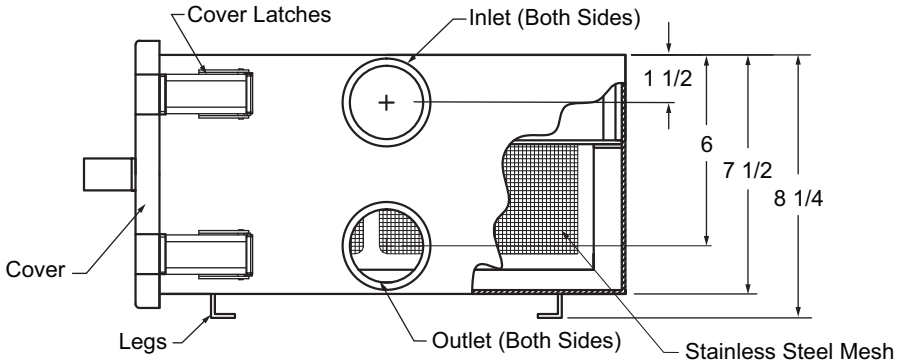

SIDE VIEW

FIGURE NO.	GPM FLOW RATE	INLET & OUTLET SIZE	†FAB STAINLESS STEEL (304)
8738	35	2	**POA**

REGULARLY FURNISHED: Fabricated Type 304 Stainless Steel Solids Interceptor with Dual High Inlet and Dual Low Outlet, Mesh Lined Basket and Gasketed Locking Cover.

FIG. 8750, FIG. 8760 SUSPENDED TYPE HAIR AND LINT SOLIDS INTERCEPTORS

FUNCTION: Installed on the lavatory or sink in dormitories, motels and beauty salons. Intercepts hair and sediment which is commonly encountered in these areas. Serves also as a safeguard against losing rings and other valuable jewelry due to accidental dropping into lavatory drain. Unit is easily cleaned by removing cleanout plug on bottom of body and dropping perforated basket.

OPTIONS: **ADD**

Replacement SS Sediment Retainer
(with purchase of Interceptor) **365.00**

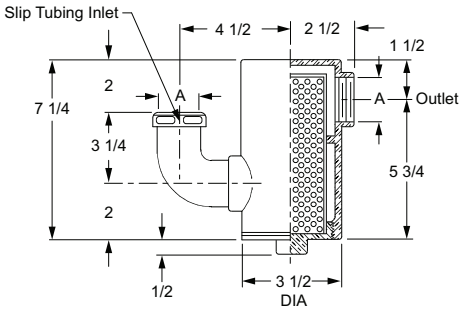

Fig. 8750

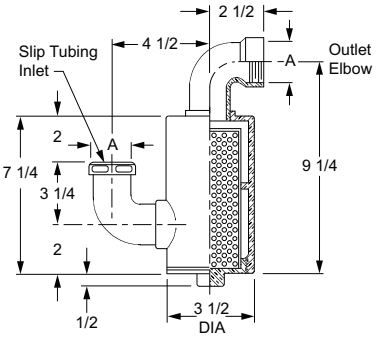

Fig. 8760

FIGURE NO.	INLET & OUTLET SIZE A	†CHROME PLATED BRONZE	POLISHED BRONZE (-PB)	CHROME PLATED CAST IRON (-CPCI)	DUCO CAST IRON (-CI)	APPROX. WEIGHT LBS.
8750	0125 or 0150"	**2,974.00**	**2,226.00**	**1,956.00**	**1,211.00**	6
WITH TOP OUTLET ELBOW						
8760	0125 or 0150"	**3,527.00**	**2,695.00**	**2,532.00**	**1,707.00**	9

REGULARLY FURNISHED: Chrome Plated Bronze Body, Gasketed Cover and Slip-Type Inlet Elbow with Perforated Stainless Steel Basket.

NOTE: Allow 7" below interceptor for removal of basket.

NOTE: Chrome plated cast iron interceptor recommended for beauty shops.

NOTE: It is the responsibility of the installer to check all parts (internal & external) to verify they are in their proper operating order & locations.

FIG. 8790, FIG. 8795 BASKET STRAINER SOLIDS INTERCEPTORS SUSPENDED TYPE

FUNCTION: Installed at the suction side of pump equipment to intercept hair, lint, leaves, paper scraps and other debris which might damage the pump. Fig 8790 has a yoke type cover clamp for fast cover removal when basket has to be cleaned. Fig. 8795 has a bolted cover which is recommended where pressures are higher and protection against tampering is desired.

Fig. 8790

Fig. 8795

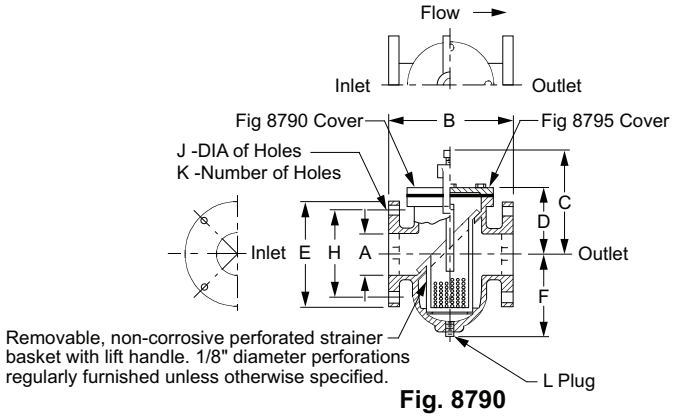

Fig. 8790

FIGURE 8790 WITH YOKE TYPE COVER, FIGURE 8795 WITH BOLTED TYPE COVER												
A SIZE	B	C	D	E DIA	F	H DIA	J DIA	K	L	†DUCO CAST IRON	FOR EACH REPLACEMENT BASKET	APPROX. WEIGHT LBS.
02"	8 3/4"	7 3/4"	4 1/2"	6"	5 1/2"	4 3/4"	3/4"	4	3/4"	**3,990.00**	**1,962.00**	35
0250"	8 3/4"	7 3/4"	4 3/4"	7"	5 1/2"	5 1/2"	3/4"	4	3/4"	**4,262.00**	**1,962.00**	40
03"	8 3/4"	7 1/4"	4 1/2"	7 1/2"	6"	6"	3/4"	4	3/4"	**6,606.00**	**1,962.00**	40
04"	11"	7 1/2"	5"	9"	7 3/4"	7 1/2"	3/4"	8	3/4"	**9,217.00**	**2,569.00**	60
05"	11"	8 1/4"	5 1/4"	10"	8 1/2"	8 1/2"	7/8"	8	1 1/4"	**12,514.00**	**3,278.00**	90
06"	15 1/4"	10 3/4"	6 1/2"	11"	12 3/4"	9 1/2"	7/8"	8	1 1/4"	**15,638.00**	**4,067.00**	130
08"	17"	11"	6 1/2"	13 1/2"	15 1/4"	11 3/4"	7/8"	8	1 1/4"	**25,385.00**	**6,791.00**	200
10"	21 1/2"	13"	8"	16"	17 1/2"	14 1/4"	1"	12	1 1/4"	**46,869.00**	**9,539.00**	330

REGULARLY FURNISHED: Duco Coated Body and Cover.

NOTE: It is the responsibility of the installer to check all parts (internal & external) to verify they are in their proper operating order & locations.

†REGULARLY FURNISHED

FIG. 8811 SERIES SAND INTERCEPTORS

FUNCTION: Used in service areas to receive wastewater with sand and sediment through the top grates or from additional drains upstream through the inlet connection. Regular cleaning is required for proper operation.

OPTIONS: **ADD**

Y No-Hub Adaptor (2 req'd) .....**See Fig. 2646Y for list add**

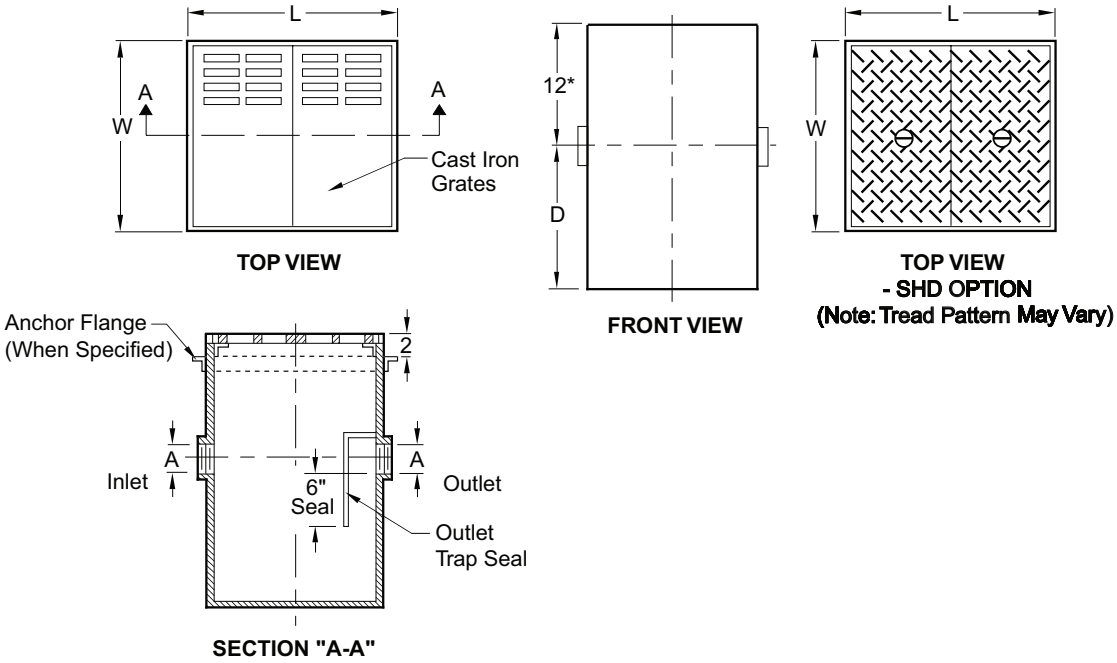

NOTES: Interceptor shall be vented on outlet side per local code requirements.
It is the responsibility of the installer to check all parts (internal and external) to verify they are in their proper operating order and location.
*12" Regularly Furnished -Specify dimension if higher or lower is required.
**When specifying H20 Ductile Iron Slotted Grates, additional supports are furnished under each grate.

FIGURE NO.	GPM FLOW RATE	A PIPE SIZE	L	W	D	CAPACITY GALS	NO. OF 12" X 24" GRATES	†STEEL DUCO COATED	ADD FOR: EXT. (-E) UP TO 6"	EXT. PER INCH OVER 6"	DUCTILE IRON GRATE (-M)	HVY DUTY DIA. PLT CVR (-SHD)	VANDAL PROOF (-U)	ANCHOR FLANGE (F)	APPROX. WEIGHT LBS.
8811-20	20	04"	24 3/8"	24 3/8"	26"	60	2	POA	POA	POA	POA	POA	POA	POA	285
8811-50	50	04"	48 3/8"	24 3/8"	26"	120	4	POA	POA	POA	POA	POA	POA	POA	489
8811-150	150	04"	48 5/8"	49"	38"	360	8	POA	POA	POA	POA	POA	POA	POA	1,495
8811-250	250	06"	72 5/8"	49"	39"	540	12	POA	POA	POA	POA	POA	POA	POA	1,960
8811-350	350	06"	96 5/8”	49"	45"	855	16	POA	POA	POA	POA	POA	POA	POA	2,750
8811-500	500	06"	120 5/8"	49"	51"	1200	20	POA	POA	POA	POA	POA	POA	POA	3,505

REGULARLY FURNISHED: Fabricated Steel Catch Basin, Gray Duco Coated Inside and Outside, Threaded Inlet and Outlet (with Outlet Trap Seal) and Cast Iron Grates.

NOTE: If any dimension is larger than 92” or if any single item weighs more than 3,500 lbs., this would be an oversized and/or overweight product and our standard FFA terms may not apply. **Please contact our shipping department for additional shipping charges**.

FOR INFORMATION ON POA ITEMS, PLEASE CONTACT YOUR LOCAL JAY R. SMITH REPRESENTATIVE

†REGULARLY FURNISHED

FIG. 8817 SERIES SAND AND SEDIMENT INTERCEPTORS ARC COATED

FUNCTION: Used in maintenance to receive wastewater that contains sand and sediment. The solid baffle system enhances the separation process as sand and sediment settle out within each chamber as the water flows through the interceptor. Regular cleaning is required for proper operation.

OPTIONS: **ADD**

-SS All Stainless Steel ..... **POA**

Y No-Hub Adaptor (4 req'd) ..... **See Fig. 2646Y for list add**

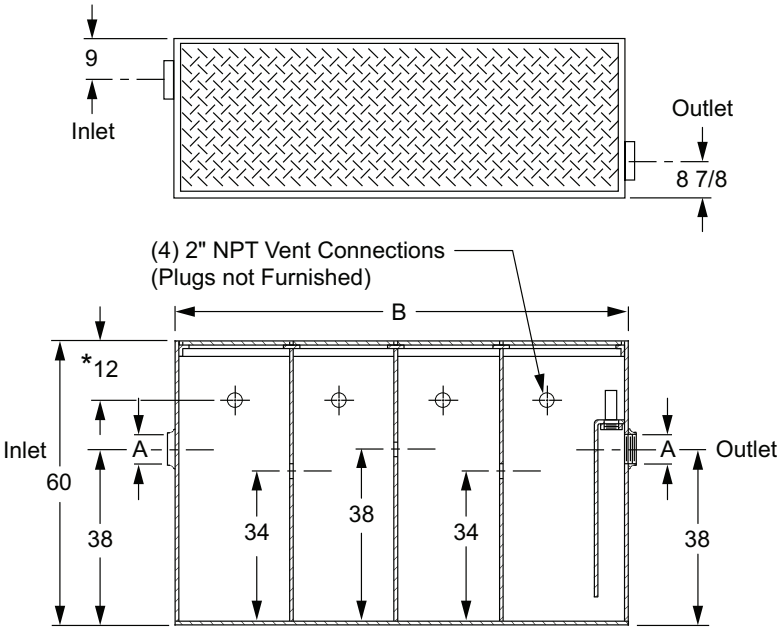

NOTE: It is the responsibility of the installer to check all parts (internal & external) to verify they are in their proper operating order & locations.

*12" Regularly Furnished -Specify dimension if higher or lower is required.

NOTE: If any dimension is larger than 92" or if any single item weighs more than 3,500 lbs., this would be an over-sized and/or overweight product and our standard FFA terms may not apply. **Please contact our shipping department for additional shipping charges**.

For after the fact extensions only
Extensions for these units (after the fact) will require a new cover as well. Please contact Jay R. Smith Sales Dept. for pricing.

FIGURE NO.	SIZE (GALLONS)	CUBIC FEET	A PIPE SIZE	WIDTH	B LENGTH	†STEEL COAL TAR EPOXY COATED	ADD FOR: EXT. (-E) UP TO 6"	EXT. PER INCH OVER 6"	EXTRA HEAVY DUTY REINF. COVER (-XHD)	ANCHOR FLANGE (-F)	APPROX. WEIGHT LBS.
8817-300	300	43	04" NPT	36"	60"	**POA**	**POA**	**POA**	**POA**	**POA**	1,600
8817-400	400	54	04" NPT	36"	72"	**POA**	**POA**	**POA**	**POA**	**POA**	1,750
8817-500	500	72	04" NPT	36"	96"	**POA**	**POA**	**POA**	**POA**	**POA**	2,100
8817-600	600	81	04" NPT	36"	108"	**POA**	**POA**	**POA**	**POA**	**POA**	2,500
8817-700	700	90	04" NPT	36"	120"	**POA**	**POA**	**POA**	**POA**	**POA**	2,700
8817-800	800	108	04" NPT	36"	144"	**POA**	**POA**	**POA**	**POA**	**POA**	3,000
8817-1000	1000	135	04" NPT	36"	180"	**POA**	**POA**	**POA**	**POA**	**POA**	3,640

REGULARLY FURNISHED: Coal Tar Epoxy Coated Fabricated Steel Body and Non-Skid Cover.

FIG. 8818 SERIES SAND AND SEDIMENT INTERCEPTORS WITH STORAGE COMPARTMENT

OPTIONS: **ADD**

-SS All Stainless Steel .....**POA**

Y No-Hub Adaptor (4 req'd) .....**See Fig. 2646Y for list add**

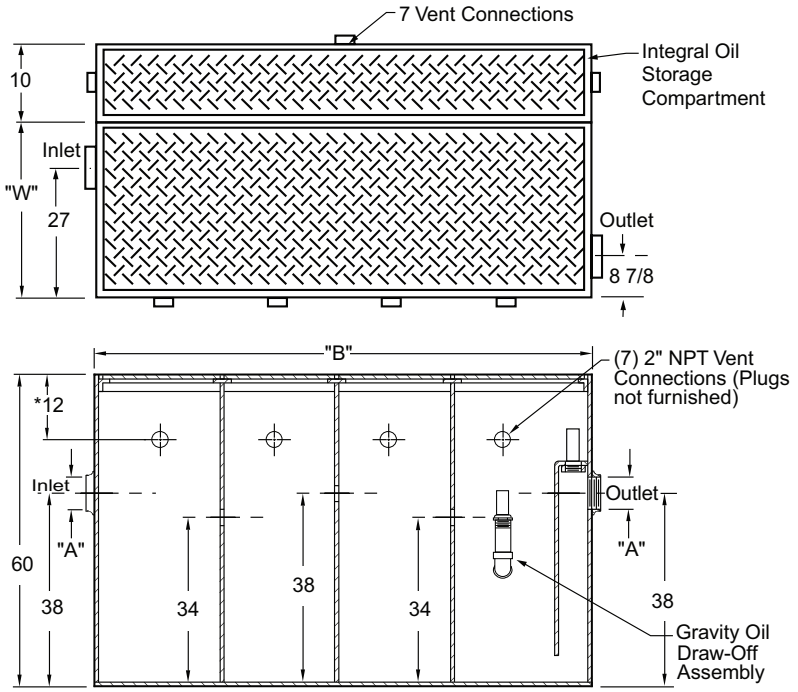

*12" Regularly Furnished -Specify dimension if higher or lower is required.

NOTE: It is the responsibility of the installer to check all parts (internal & external) to verify they are in their proper operating order & locations.

NOTE: If any dimension is larger than 92" or if any single item weighs more than 3,500 lbs., this would be an over-sized and/or overweight product and our standard FFA terms may not apply. **Please contact our shipping department for additional shipping charges**.

For after the fact extensions only

Extensions for these units (after the fact) will require a new cover as well. Please contact Jay R. Smith Sales Dept. for pricing.

FIGURE NO.	SIZE (GALLONS)	CUBIC FEET	A PIPE SIZE	W WIDTH	B LENGTH	†STEEL ARC COATED	ADD FOR: EXT. (-E) UP TO 6"	EXT. PER INCH OVER 6"	EXTRA HEAVY DUTY REINF. COVER (-XHD)	ANCHOR FLANGE (-F)	ANCHOR FLANGE & CLAMP (-FC)	GALLONS OIL STORAGE COMPARTMENT
8818-300	300	43	04" NPT	36"	60"	**POA**	**POA**	**POA**	**POA**	**POA**	**POA**	50
8818-400	400	54	04" NPT	36"	72"	**POA**	**POA**	**POA**	**POA**	**POA**	**POA**	50
8818-500	500	72	06" NPT	36"	96"	**POA**	**POA**	**POA**	**POA**	**POA**	**POA**	100
8818-600	600	81	06" NPT	36"	108"	**POA**	**POA**	**POA**	**POA**	**POA**	**POA**	100
8818-700	700	90	06" NPT	36"	120"	**POA**	**POA**	**POA**	**POA**	**POA**	**POA**	125
8818-800	800	108	06" NPT	36"	144"	**POA**	**POA**	**POA**	**POA**	**POA**	**POA**	150
8818-1000	1000	135	06" NPT	36"	180"	**POA**	**POA**	**POA**	**POA**	**POA**	**POA**	150

REGULARLY FURNISHED: Acid Resistant Coated Fabricated Steel Interceptor, Integral Oil Storage Compartment, Oil Draw-Off and Diamond Plated Secured Covers.

FOR INFORMATION ON POA ITEMS, PLEASE CONTACT YOUR LOCAL JAY R. SMITH REPRESENTATIVE

PATENT PENDING

†REGULARLY FURNISHED

FIG 8870 SERIES SOLIDS INTERCEPTOR WITH GASKETED QUICK LATCHING COVER

FUNCTION: To provide means of collecting various food waste solids to prevent entry into the grease interceptor. Can be installed on the floor or semi-recessed.

Fig. No.	GPM	†Fabricated Steel	Unit w/ARIO	Ext. (-E) Up to 6"	Ext. Per 1" over 6"	Ext. (-E) Up to 6" w/ARIO	Ext. Per 1" over w/ARIO
8870Y02	4	POA	POA	POA	POA	POA	POA
8871Y02	7	POA	POA	POA	POA	POA	POA
8872Y02	10	POA	POA	POA	POA	POA	POA
8873Y02	15	POA	POA	POA	POA	POA	POA
8874Y03	20	POA	POA	POA	POA	POA	POA
8875Y03	25	POA	POA	POA	POA	POA	POA
8876Y03	35	POA	POA	POA	POA	POA	POA
8877Y03	50	POA	POA	POA	POA	POA	POA
8878Y04	75	POA	POA	POA	POA	POA	POA
8879Y04	100	POA	POA	POA	POA	POA	POA

Y † No-Hub Inlet/Outlet

FIG 8870-34 SERIES SOLIDS INTERCEPTOR WITH GASKETED RECESSED COVER

FUNCTION: To provide means of collecting various food waste solids to prevent entry into the grease interceptor. Can be installed on the floor or recessed.

Fig. No.	GPM	Inlet & Outlet Size	†ARC Fabricated Steel	H20 Cover
8870Y02-34	4	2	POA	POA
8871Y02-34	7	2	POA	POA
8872Y02-34	10	2	POA	POA
8873Y02-34	15	2	POA	POA
8874Y03-34	20	2	POA	POA
8875Y03-34	25	3	POA	POA
8876Y03-34	35	3	POA	POA
8877Y03-34	50	3	POA	POA
8878Y04-34	75	4	POA	POA
8879Y04-34	100	4	POA	POA

Y † No-Hub Inlet/Outlet

For after the fact extensions only
Extensions for these units (after the fact) will require a new cover as well. Please contact Jay R. Smith Sales Dept. for pricing.

INTERCEPTORS

FIG 8910 SERIES LINT INTERCEPTORS

FUNCTION: Used where discharge water contains large quantities of hair, lint and foreign particles such as in commercial laundry facilities. Cleaning is accomplished by removing the cover and screens.

OPTIONS:		ADD
-SS	All Stainless Steel	POA
-VC	2" Vent Connections (2)	860.00

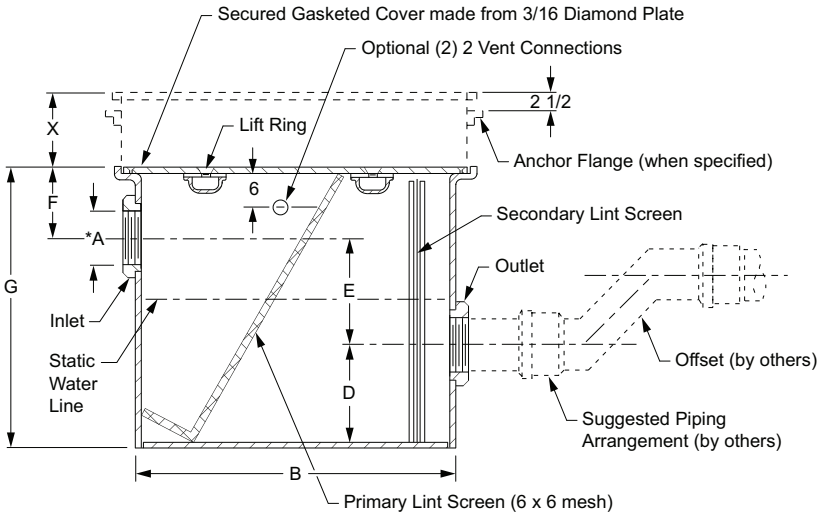

C= Body Width
X= Specify Additional Height Required

NOTE: If any dimension is larger than 92" or if any single item weighs more than 3,500 lbs., this would be an oversized and/or overweight product and our standard FFA terms may not apply. **Please contact our shipping department for additional shipping charges**.

For after the fact extensions only
Extensions for these units (after the fact) will require a new cover as well. Please contact Jay R. Smith Sales Dept. for pricing.

FIGURE NO.	GPM FLOW RATE	MAX NO. OF WASHERS	INLET & OUTLET SIZE A*	BODY B LENGTH	BODY C WIDTH	ROUGHING DIM D	ROUGHING DIM E	ROUGHING DIM F	ROUGHING DIM G	SECURING SCREWS IN COVER	†STEEL DUCO COATED	ADD FOR: EXT. (-E) UP TO 6"	ADD FOR: EXT. PER INCH OVER 6"	ADD FOR: ANCHOR FLANGE (-F)	ADD FOR: FLANGE AND FLASHING CLAMP (-FC)	APPROX. WEIGHT LBS.
8910-20	20	2	04"	30"	24"	12"	12"	8"	32"	8	**13,815.00**	**3,059.00**	**322.00**	**1,396.00**	**2,930.00**	270
8910-25	25	3	04"	36"	24"	12"	12"	8"	32"	8	**13,990.00**	**3,079.00**	**334.00**	**1,727.00**	**2,965.00**	318
8910-50	50	5	04"	40"	26"	12"	12"	8"	32"	10	**15,798.00**	**3,504.00**	**362.00**	**1,955.00**	**3,353.00**	332
8910-100	100	10	06"	48"	30"	12"	12"	8"	32"	10	**19,496.00**	**4,348.00**	**455.00**	**2,022.00**	**4,131.00**	420
8910-150	150	15	06"	51"	32"	24"	12"	8"	44"	10	**21,446.00**	**4,795.00**	**490.00**	**2,170.00**	**4,551.00**	555
8910-200	200	20	06"	54"	36"	24"	12"	12"	48"	10	**23,597.00**	**5,275.00**	**540.00**	**2,506.00**	**5,007.00**	696
8910-350	350	35	06"	68"	42"	24"	12"	12"	48"	14	**29,200.00**	**6,560.00**	**670.00**	**2,537.00**	**6,192.00**	874
8910-500	500	50	06"	84"	54"	36"	12"	12"	60"	18	**35,125.00**	**7,897.00**	**805.00**	**2,992.00**	**7,438.00**	1,336

*Available with larger inlet and outlet when specified. Contact the factory for pricing.

REGULARLY FURNISHED: Fabricated Steel with Gray Duco Coating and Stainless Steel Primary and Secondary Lint Screens, 3/16" Diamond Plate Cover (Secured & Gasketed) and Threaded Inlet and Outlet.

†REGULARLY FURNISHED

FIG. 8925 SERIES SEDIMENT/OIL INTERCEPTOR

FUNCTION: Used in service stations, parking garages, car and truck washes and industrial plants where discharged water contains oily sediment and sludge. The sediment and sludge are collected in the sediment pan and removable bucket. The oily residue is trapped in the interceptor and can be skimmed off periodically.

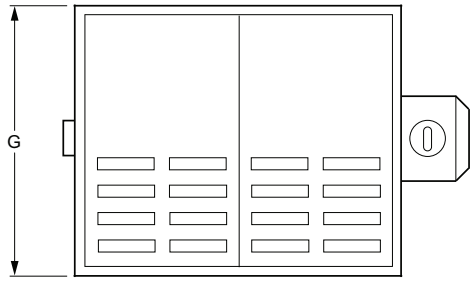

TOP VIEW

OPTIONS:

		ADD
-OD	Oil Draw-off Assembly	**541.00**
-SS	Stainless Steel Body	**POA**
-M	Ductile Iron Grate	
	For 8925-12 (Priced for 1 Grate)	**1,693.00**
	For 8925-60 (Priced for 1 Grate)	**1,693.00**
	For 8925-100 (Priced for 2 Grates)	**3,386.00**
	For 8925-200 (Priced for 3 Grates)	**5,079.00**

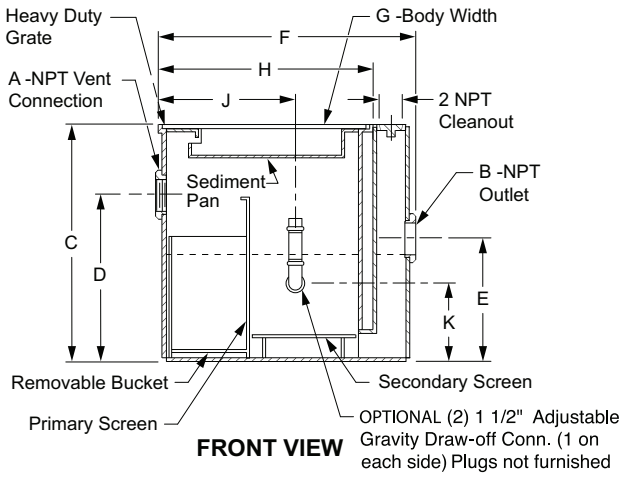

FRONT VIEW

NOTE: Interceptor shall be vented on outlet side per local code requirements.
It is the responsibility of the installer to check all parts (internal and external) to verify they are in their proper operating order and location.

NOTE: If any dimension is larger than 92" or if any single item weighs more than 3,500 lbs., this would be an oversized and/or overweight product and our standard FFA terms may not apply. **Please contact our shipping department for additional shipping charges**.

FIGURE NO.	SLUDGE CAP LBS	A VENT SIZE	B OUTLET SIZE	C	D	E	F	G	H	J	K	NO. OF 12" X 24" GRATES	†STEEL DUCO COATED	ADD FOR: ARC IN AND OUT (-ARIO)	EXT. (-E) UP TO 6"	EXT. PER INCH OVER 6"	ANCHOR FLANGE (-F)	FLANGE AND FLASHING CLAMP (-FC)	APPROX. WEIGHT LBS.
8925-12	12	02"	02"	18"	13"	10 1/2"	17 1/2"	12 1/2"	12 1/2"	9"	6"	*1	**4,748.00**	**987.00**	**791.00**	**121.00**	**987.00**	**1,362.00**	75
8925-60	60	02"	04"	26"	20"	18"	29 1/2"	12 1/2"	24 1/2"	19"	8"	1	**12,803.00**	**1,190.00**	**1,190.00**	**177.00**	**1,362.00**	**2,053.00**	175
8925-100	100	02"	04"	34"	27"	22"	29 1/2"	24 1/2"	24 1/2"	19"	12"	2	**18,187.00**	**1,879.00**	**1,572.00**	**252.00**	**1,715.00**	**2,591.00**	280
8925-200	200	02"	04"	34"	27"	22"	41 1/2"	24 1/2"	36 1/2"	27"	12"	3	**26,952.00**	**3,950.00**	**2,372.00**	**370.00**	**2,258.00**	**3,325.00**	370

***Grate is 12 x 12"**
For Ductile Iron see options above for add on price.

REGULARLY FURNISHED: Fabricated Steel Body with Duco Coating and Sediment Pan w/Stainless Steel Bucket w/Perforated Back, Secondary Screen and Heavy Duty Cast Iron Grating.

†REGULARLY FURNISHED

GREASE+GARD®II SKIMMER AND GREASE RECOVERY DEVICE

FIG. 8165, 8166 GREASE+GARD®II (GRD) RECOVERY DEVICE

FUNCTION: Used in all areas where fats, oils and grease must be intercepted and collected. The unique fully automatic grease removal design permits removal of accumulated grease without having to remove the cover. Accumulated grease in liquid form is automatically skimmed off and discharged into a reservoir for convenient disposal.

Fig. No.	Inlet & Outlet Size	†Type 304 (CF8) Stainless Steel	Steel (-A505)	GPM Flow Rate	Grease Capacity Lbs.
8165-20	3	**POA**	**POA**	20	40
8165-25	3	**POA**	**POA**	25	50
8165-35	3	**POA**	**POA**	35	70
8165-50	3	**POA**	**POA**	50	100
LOW TYPE GREASE+GARD®II (GRD) RECOVERY DEVICE					
8166-20	3	**POA**	**POA**	20	40
8166-35	3	**POA**	**POA**	35	70
8166-50	3	**POA**	**POA**	50	100

Y † No-Hub Inlet/Outlet.....**POA**
T Threaded Inlet/Outlet.....**POA**

ADD FOR:
-B Bucket in lieu of Baffles.....**POA**

NOTES:
1. Allow 15 for Fig. 8165 and 17 for Fig. 8166 above interceptor cover for Grease+Gard®II removal if necessary.
2. Allow 17 clearance above interceptor for bucket removal.

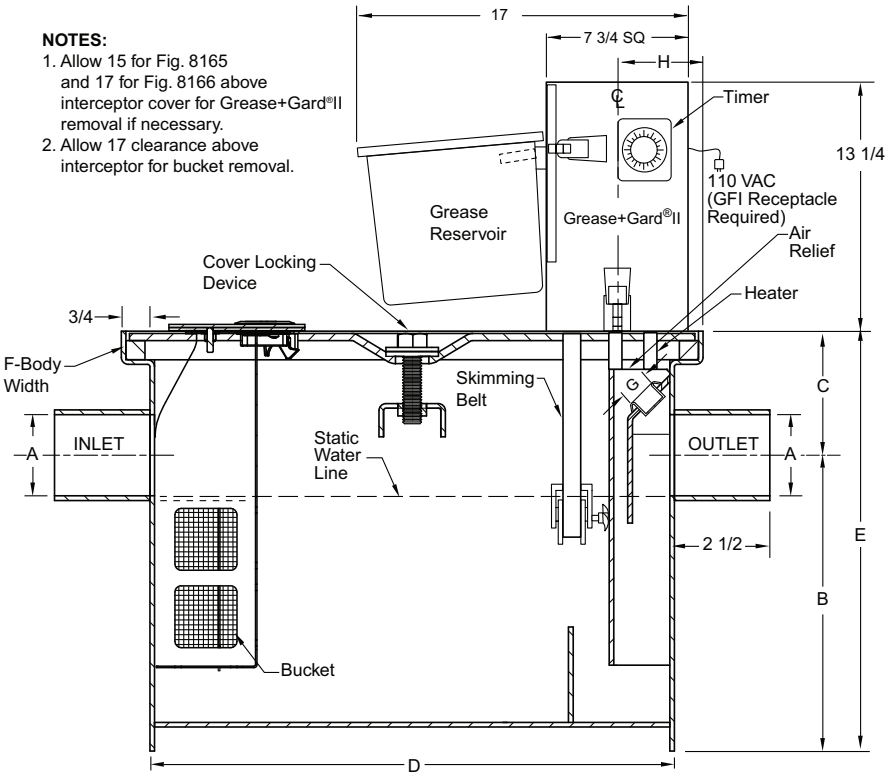

†REGULARLY FURNISHED

GREASE+GARD®II SKIMMER AND GREASE RECOVERY DEVICE

FIG. 8175, 8176 GREASE+GARD®II (GRD) WITH LOW PROFILE SKIMMER

FUNCTION: Used in all areas where fats, oils and grease must be intercepted and collected. The unique fully automatic grease removal design permits removal of accumulated grease without having to remove the cover. Accumulated grease in liquid form is automatically skimmed off and discharged into a reservoir for convenient disposal.

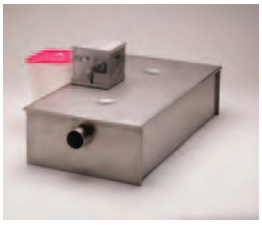

Fig. No.	Inlet & Outlet Size	†Type 304 (CF8) Stainless Steel	Steel (-A505)	GPM Flow Rate	Grease Capacity Lbs.
8175-20	3	**POA**	**POA**	20	40
8175-25	3	**POA**	**POA**	25	50
8175-35	3	**POA**	**POA**	35	70
8175-50	3	**POA**	**POA**	50	100
LOW TYPE GREASE+GARD®II (GRD) w/LOW PROFILE SKIMMER					
8176-20	3	**POA**	**POA**	20	40
8176-35	3	**POA**	**POA**	35	70
8176-50	3	**POA**	**POA**	50	100

Y † No-Hub Inlet/Outlet.....**POA**
T Threaded Inlet/Outlet .....**POA**

ADD FOR:
-B Bucket in lieu of Baffles .....**POA**

NOTES:
1. Allow 11 for Fig. 8175 and 12 1/2 for Fig. 8176 above interceptor cover for Grease+Gard®II removal if necessary.
2. Allow 17 clearance above interceptor for bucket removal.

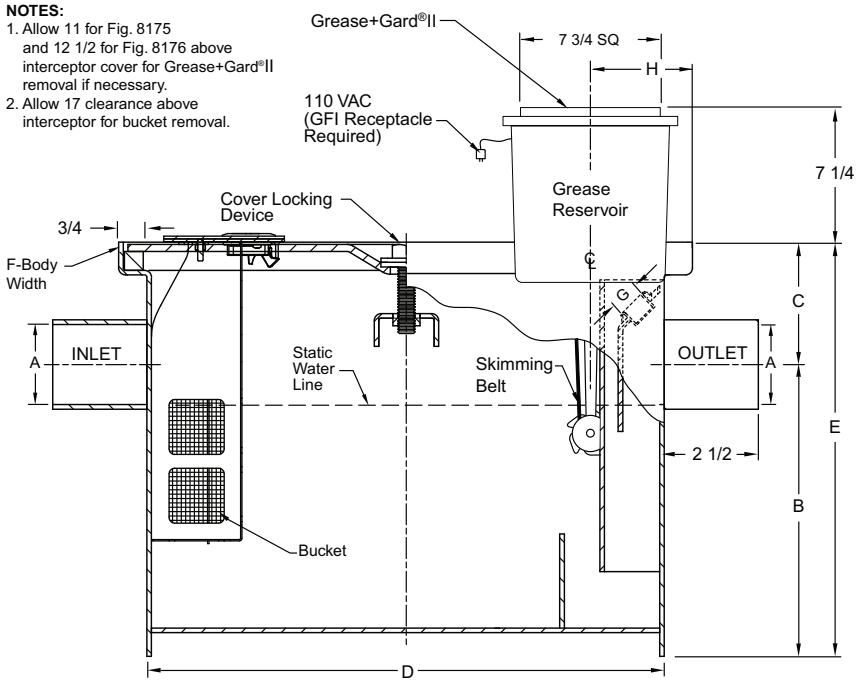

GREASE+GARD

GREASE+GARD®II RETROFIT SKIMMER AND SOLIDS INTERCEPTORS

FIG. 8165GG, 8166GG, 8175GG, 8176GG GREASE+GARD®II (GRD) RETROFIT SKIMMERS

FUNCTION: Designed for installation on an existing grease interceptor for the purpose of converting it to an automatic grease removal device (GRD). The unique design of the Grease+Gard®II removes grease from the interceptor and discharges it into a reservoir for convenient disposal without having to remove the cover.

Fig. No.	†Type 304 Stainless Steel (CF8)
8165GG	POA
8166GG	POA
8175GG	POA
8176GG	POA

GREASE+GARD®II RETROFIT SKIMMER

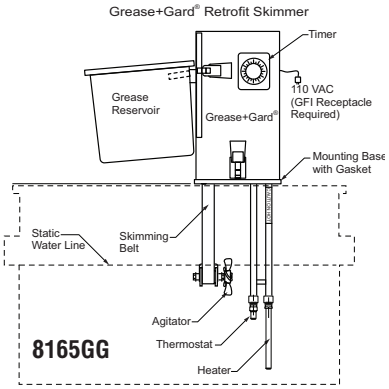

GREASE+GARD®II RETROFIT SKIMMER LOW PROFILE TYPE

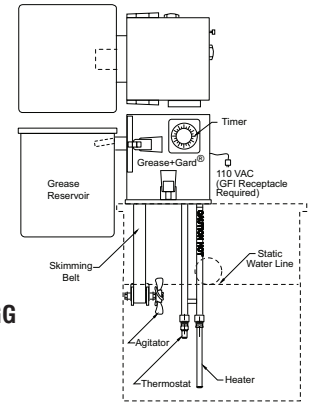

FIG. 8960 GREASE+GARD® (GRD) INDIRECT WASTE SOLIDS INTERCEPTOR

FUNCTION: Open top solids interceptor provides a means of collecting food solids from an indirect waste discharge line before entering the drain line going to a grease interceptor.

Fig. No.	Inlet & Outlet Size	†Type 304 (CF8) Stainless Steel
8960T	2	POA
8960T	3	POA
8960Y	2	POA
8960Y	3	POA

T † Threaded Connections
Y No-Hub Connections

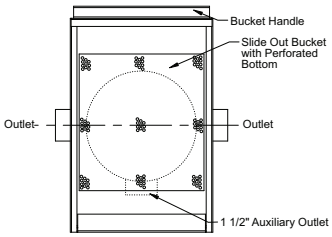

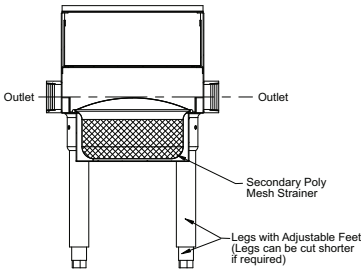

FIG. 8980, 8981 GREASE+GARD® (GRD) INLINE SOLIDS INTERCEPTOR

FUNCTION: Provides a means of collecting food solids before entering the drain line going to a grease interceptor.

Fig. No.	Inlet & Outlet Size	†Type 304 (CF8) Stainless Steel
8980T	2	POA
8980T	3	POA
8980Y	2	POA
8980Y	3	POA

T † Threaded Inlet/Outlet
Y No-Hub Inlet/Outlet

Fig. No.	Inlet & Outlet Size	† Steel
8981	2	POA

Y † No-Hub Inlet/Outlet

Fig. 8980

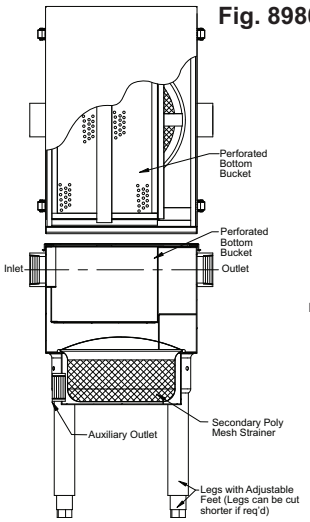

Fig. 8981

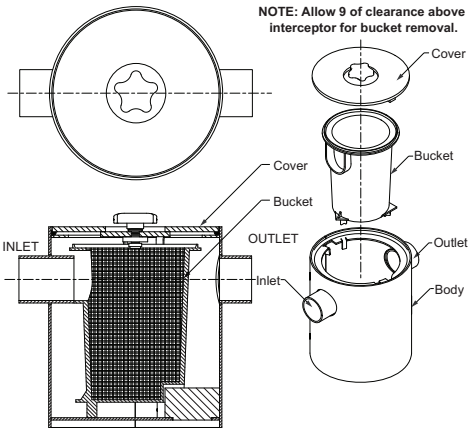

FOR INFORMATION ON POA ITEMS, PLEASE CONTACT YOUR LOCAL JAY R. SMITH REPRESENTATIVE

†REGULARLY FURNISHED

ORDERING GUIDELINES

9000 SERIES

After identifying the proper options required to meet the engineering specification, place order as shown below:

Examples:

9710BW04 (-S40-B-C-E04-U)

- Figure No.
- Type of Outlet (Butt Weld)
- Pipe Size (Inches)
- Schedule 40
- Sediment Bucket
- Flashing Clamp with Seepage Holes
- Extension (4")
- Vandal Proof

*All variation suffixes are to be shown in parenthesis.

WHERE A SUPERIOR DRAIN IS REQUIRED

NUCLEAR AND FOSSIL FUEL POWER PLANTS
Stainless steel or carbon steel – as dictated by piping material and performance requirements.

FOOD PROCESSING INDUSTRIES
Where there is exposure to animal or vegetable fats and acids. Ideal for: Mills, slaughter and packing houses, dairies, breweries and citrus juice plants.

WIDELY USED IN — Hospitals, laboratories, chemical plants and many industrial plant applications.

- 9690 series drains are made from drawn 304 stainless steel 14 gauge sheet. 316 material can be supplied (when specified).
- 9700 series drains and cleanouts are regularly furnished in ASTM-A351 (CF8) cast equivalent to type 304 rough finish stainless steel.
- Optional Materials – (only when specified) ASTM (CF8M) equivalent to type 316 stainless steel. Carbon steel (ASTM A-27).
- Three outlet types available: Inside caulk (regularly furnished). Threaded and Butt Weld outlet (when specified).
- Floor drains (except 9713, 9718, 9740, 9745 and 9750) furnished with integral anchor flange.
- Seepage openings on flanged drains are furnished only (when specified) (except 9733 and 9734).
- Flashing clamp – Available with all integral anchor flange drains.
- All grates are regularly furnished loose set. Available vandal proof (when specified).
- Top finish – As cast (rough finish). Satin finished (when specified).

MATERIALS:

304 or CF8 stainless steel resists corrosion and oxidation because of its 18% minimum chromium content. The 8% minimum nickel content establishes this alloy's metallurgical characteristics and also extends resistance to corrosion caused by reducing chemicals.

304 or CF8 resists all ordinary rusting and is immune to food substances, sterilizing solutions, most of the organic chemicals, dye substances and a wide variety of inorganic chemicals.

316 or CF8M. Offered as optional material (when specified only). Used where a higher degree of corrosion resistance is needed as compared to Type CF8. Type CF8M differs from CF8 by the addition of up to 3% molybdenum. The molybdenum increases the corrosion resistance to withstand attack by many industrial chemicals and solvents. CF8M will also withstand attack by hypochlorite solutions, phosphoric acids, sulphite liquors, and sulfurous acids. Used in industries such as corrosive process chemicals, photographic paper, textiles, bleaches and rubber.

CN7M. *Carpenter 20Cb-3 special stainless alloys may have to be specified for very severe corrosion problems. Consult Smith Sales Engineering Department for Recommendation.*

MECHANICAL PROPERTIES:

Stainless steel is strong and ductile as compared to plastics and Hi-Sil iron, making it ideal for floor drain and cleanout applications.

Fabricatability: May be machined easily and lends itself to fabrication. Ideal for floor drains and cleanouts which have to be welded to stainless steel decks. Stainless steel is the only corrosion resistant material which offers this wide versatility of mechanical properties.

FIG. 9329-CAULK SUPPORT STRAP FOR SUPPORTING 02", 03" & 04" INSIDE CAULK DRAINS & CLEANOUTS

FUNCTION: Unique design enables installer to use the same strap for 02", 03" or 04" extra heavy or service weight soil pipe. The strap supports the body weight and the force created by caulking without slipping. May be left on pipe after drain is caulked in place or removed for re-use.

Installation of strap and drain is made fast and simple. Eliminates costly searching for wood and brick supports, wires or purchase of expensive riser clamps.

REGULARLY FURNISHED:
22 Gauge Tempered Steel Strap with Steel Machine Screw, Nut and Washer.

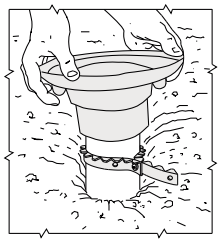

Inside Caulk Body Slips Over Stub and Rests on Support Strap

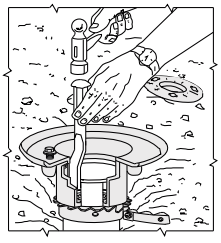

Drain Does Not Slip During Caulking Operation

SPECIALTIES, STAINLESS AND CARBON STEEL

SPECIALTIES

Fig. 9005

Fig. 9020

Fig. 9110

Fig. 9130

Fig. 9140

STAINLESS STEEL

Fig. 9200

Fig. 9205

Fig. 9600 Series

Fig. 9690

Fig. 9700A

Fig. 9703

Fig. 9704

Fig. 9705

Fig. 9710

Fig. 9713

Fig. 9715

Fig. 9718

Fig. 9720

Fig. 9725

Fig. 9730

Fig. 9733

Fig. 9734

Fig. 9735

Fig. 9740

Fig. 9745

Fig. 9750

Fig. 9755

Fig. 9759

Fig. 9760

Fig. 9770

Fig. 9775

Fig. 9780

Fig. 9785

Fig. 9790

Fig. 9795

NOTES

FIG 9005 FRESH AIR INLET WITH PIPE CLAMP
FIG 9010 FRESH AIR INLET LESS PIPE CLAMP

FUNCTION: Provides a protective cover for the fresh air inlet piping at the exterior wall and allows ample air to enter the system.

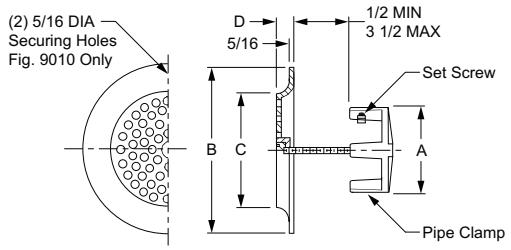

OPTIONS: **DEDUCT**
Less Pipe Clamp (Specify Fig 9010)
03-10" **129.00**

A PIPE SIZE	B DIA	C DIA	D	FREE AREA SQ IN	†POLISHED BRONZE	POLISHED NB	CHROME PLATED	APPROX. WT. LBS.
03, 04"	8"	5 1/4"	3/4"	7"	**660.00**	**777.00**	**1,101.00**	5
05"	10"	7 3/4"	3/4"	18.26"	**1,049.00**	**1,334.00**	**1,490.00**	7
06"	10"	7 3/4"	3/4"	18.26"	**1,049.00**	**1,334.00**	**1,490.00**	7
08"	14"	11 1/2"	1"	44.88"	**1,614.00**	**2,123.00**	**2,181.00**	13
10"	14"	11 1/2"	1"	44.88"	**1,614.00**	**2,123.00**	**2,181.00**	13

REGULARLY FURNISHED: Polished Bronze with Vandal Proof Screws.

SPECIALTIES

FIG. 9020 FRESH AIR INLET WITH FEMALE THREADED PIPE CONNECTION

FUNCTION: Provides a protective cover for the fresh air inlet piping at the exterior wall and allows ample air to enter the system.

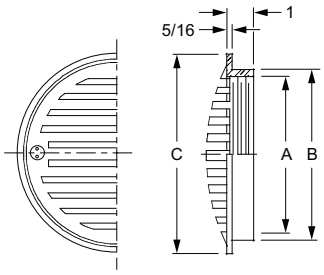

A PIPE SIZE	B DIA	C DIA	FREE AREA SQ IN	†POLISHED BRONZE	POLISHED NB	CHROME PLATED	APPROX. WT. LBS.
04"	4 3/4"	7"	13.60"	**786.00**	**937.00**	**1,233.00**	4
05"	6"	7"	13.60"	**960.00**	**1,111.00**	**1,407.00**	5

REGULARLY FURNISHED: Polished Bronze with Vandal Proof Screws.

Fig. 9020 Meets New York State Specifications

FIG. 9095 SS FLOOR SINK W/FORMIT® DRAIN INSTALLATION DEVICE

FUNCTION: The Jay R. Smith Mfg. Co.® FormIt® Drain Installation Device is designed to stabilize the drain and provide adjustment during the installation process and allows final connection of outlet piping to drain after the concrete pour.

Sump Depth	Type 304 (CF8) Stainless Steel With Dome Bottom Strainer	Type 304 (CF8) Stainless Steel With Sediment Bucket
4"	**POA**	**POA**
6'	**POA**	**POA**
8"	**POA**	**POA**
10"	**POA**	**POA**

Y † No-Hub Outlet

BW Butt Weld Outlet, Schedule 5 ..... **POA**
Schedule 10 ..... **POA**
Schedule 40 ..... **POA**

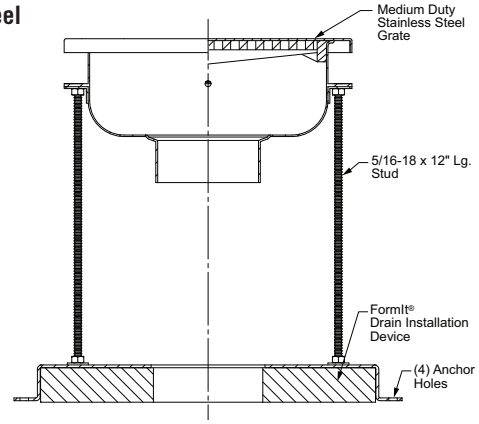

FOR INFORMATION ON POA ITEMS, PLEASE CONTACT YOUR LOCAL JAY R. SMITH REPRESENTATIVE

†REGULARLY FURNISHED

FIG. 9110, 9120 ADJUSTABLE "P" TRAP STANDARDS-CAST IRON

FUNCTION: For use with all service sinks.

OPTIONS: **ADD**

-N15 1 1/2" Overflow Connection (9120 Only) **465.00**

-SS For use with Stainless Steel Sink.....**N/C**

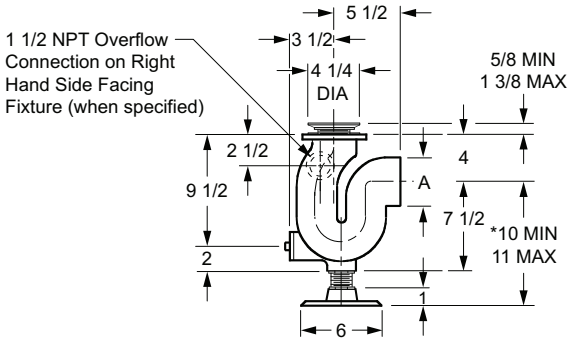

FIGURE NO.	PIPE SIZE	FREE AREA SQ IN	CONNECTION	†ARE INSIDE	ARE INSIDE AND OUTSIDE	APPROX. WT. LBS.
9110	02"	2"	Threaded	**1,231.00**	**1,614.00**	16
9120	03"	2"	Threaded	**1,231.00**	**1,614.00**	22

REGULARLY FURNISHED: Chrome Plated Strainer, Rubber Gasket and Bronze Cleanout Plug. Cast Iron with White Duco Coated Outside and Acid Resistant Coated Inside.

*Roughing shall be coordinated with sink used.

FIG. 9114 TO 9128 ADJUSTABLE "P" TRAP STANDARDS-ALL BRONZE

FUNCTION: For use with all service sinks.

OPTIONS: **ADD**

-N15 1 1/2" Overflow Connection (9124 thru 9128 Only) .....**POA**

-SS For use with Stainless Steel Sink.....**N/C**

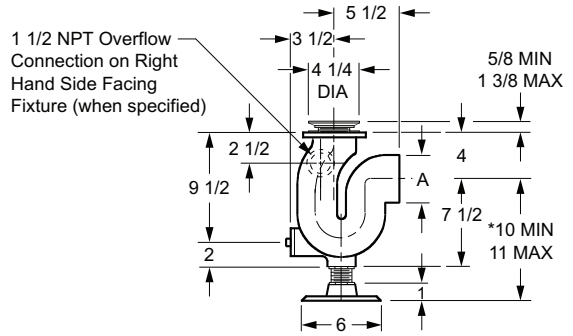

FIGURE NO.	PIPE SIZE	FREE AREA SQ IN	CONNECTION	†ALL BRONZE	APPROX. WT. LBS.
▲9114	02"	2"	Threaded	**POA**	18
▲9116	02"	2"	Sil-Brazed Outlet	**POA**	18
9118	02"	2"	Sil-Brazed Grooved	**POA**	18
9124	03"	2"	Threaded	**POA**	20
9126	03"	2"	Sil-Brazed Outlet	**POA**	20
9128	03"	2"	Sil-Brazed Grooved	**POA**	40

REGULARLY FURNISHED: Chrome Plated Strainer, Rubber Gasket and Bronze Cleanout Plug. Bronze Trap as Cast.

*Roughing shall be coordinated with sink used.

▲Conforms to Military Specification MIL S-2143-B Amendment 1

FIG. 9130, 9134, 9140 "S" TRAP STANDARDS-CAST IRON-BRONZE

FUNCTION: For use with all service sinks.

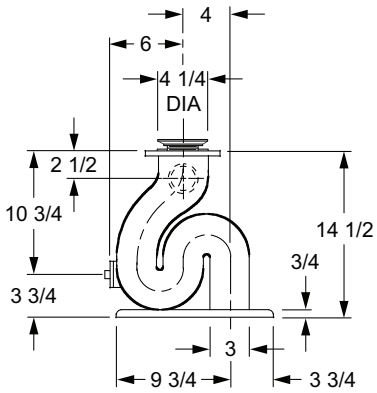

Fig. 9130

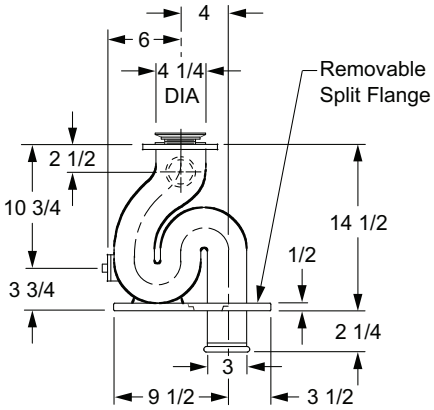

Fig. 9140

FIGURE NO.	PIPE SIZE	FREE AREA SQ IN	CONNECTION	†ARE INSIDE	ARE INSIDE AND OUTSIDE	ALL BRONZE	APPROX. WT. LBS.
9130	03"	2"	Soil	**2,210.00**	**2,572.00**	**POA**	34
▲ ***9134**	03"	2"	Soil	–	–	**POA**	40
9140	03"	2"	Soil	**2,322.00**	**2,684.00**	**POA**	35

OPTIONS: **ADD**

-N15 1 1/2" Overflow Connection (9130, 9140 Only) **465.00**

-SS For use with Stainless Steel Sink.....**N/C**

REGULARLY FURNISHED: All Traps with Chrome Plated Strainer, Rubber Gasket and Bronze Cleanout Plug. Cast Iron Traps are White Duco Coated Outside and Acid Resistant Coated Inside. All Bronze Traps are as Cast.

*All Bronze

▲ Conforms to Military Specification MIL S-2143-B Amendment 1.

SPECIALTIES

FIG. 9200 CONDENSATE DRAIN LINE TRAP

FUNCTION: For the collection of condensate from refrigeration or air conditioning equipment. The condensate drains, by gravity, through piping to the tapped inlet on the fixture side of the 9200 trap.

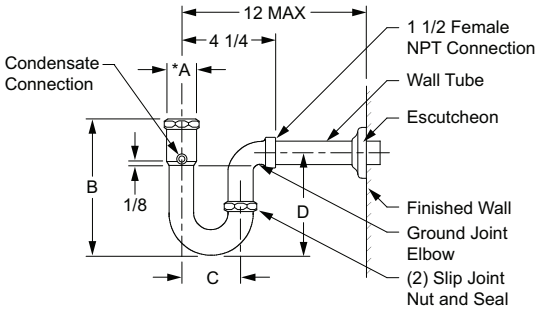

Inlet Outlet Size *A	B	C	D	†17 Gauge Chrome Plated Satin Bronze	17 Gauge Chrome Plated Polished Bronze (-CP)	Approx. Wt. Lbs.
0125 or 0150"	6"	2 7/8"	5"	**752.00**	**860.00**	4

REGULARLY FURNISHED: Satin Chrome Plated Cast Bronze P-Trap with Ground Joint Outlet, Threaded Wall Tube, Slip Joint Nuts, Washer, Escutcheon and 1/2" NPT Condensate Connection.

*1 1/4" and 1 1/2" slip joint nuts are provided to accommodate the appropriate fixture tailpiece. Ground joint elbow is threaded 1 1/2" NPT.

FIG. 9205 DECONTAMINATION FLOOR DRAINS

FUNCTION: Used in areas where hazardous or otherwise contaminated waste is present. Consists of two individual drains. Slotted grate drain permits drainage of contaminated waste to a separate storage tank, while the adjacent drain connected to the sewer is covered by a solid ground joint plug, thus preventing contaminated waste from entering the sewer system. Switching the solid cover and grate will allow washed down decontaminated waste to be directed to the sewer without entering the contaminated waste storage tank.

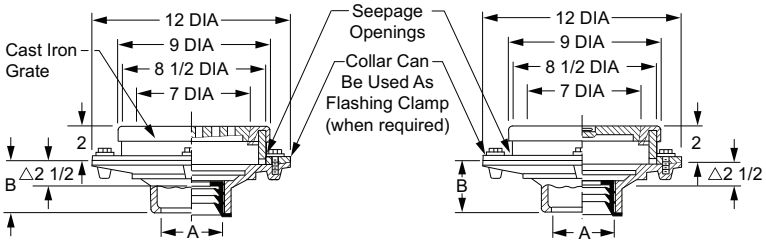

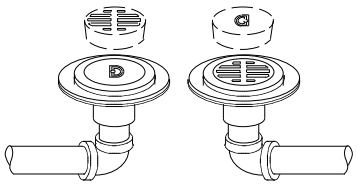

TYPICAL INSTALLATION
Drains are located close to each other for ease of switching grate and plug

A OUTLET SIZE	TOP SIZE DIA	FREE AREA SQ IN	†DUCO CI	DUCO CI PB TOP	DUCO CI NB	APPROX. WT. LBS.
02, 03, 04"	9"	10.30	**2,039.00**	**5,069.00**	**5,791.00**	50

REGULARLY FURNISHED: Two (2) Duco Cast Iron Bodies with Flashing Collar and Bronze Rim. Cast Iron Grate and Ground Joint Plug.

△This dimension to internal stop of Speedi-Set gasket.

OUTLET VARIATIONS (Specify type of outlet and pipe size in inches.)

Outlet Type	Outlet Designation Outlet Type/Pipe Size	"B" Body HT. DIM.	ADD
Inside Caulk	C02, C03, C04	3 3/4"	**N/C**
Speedi-Set Outlet SW	L02, L03, L04	3 3/4"	**N/C**
Speedi-Set Outlet XH	LXH02, LXH03, LXH04	3 3/4"	**N/C**
Threaded	T02, T03, T04	2"	**213.00**
No-Hub	Y02, Y03, Y04	3 3/4"	**N/C**

OPTIONS:		ADD
-ARC	Acid Resistant Coated	**1,018.00**
-FBSCI	Flat Bottom Str, CI, (ea)	**79.00**
-G	Galvanized CI	**1,148.00**
-M	Ductile Iron Grate and Plug	**735.00**
-RB	Bronze Grate and Plug	**3,030.00**

FIG. 9340 DRAIN FOR FLOATING (ISOLATED) FLOOR SYSTEMS

FUNCTION: Used in areas which may have to be isolated from the other parts of the building; such as mechanical equipment rooms, studios, music rooms, laboratories and data processing areas.

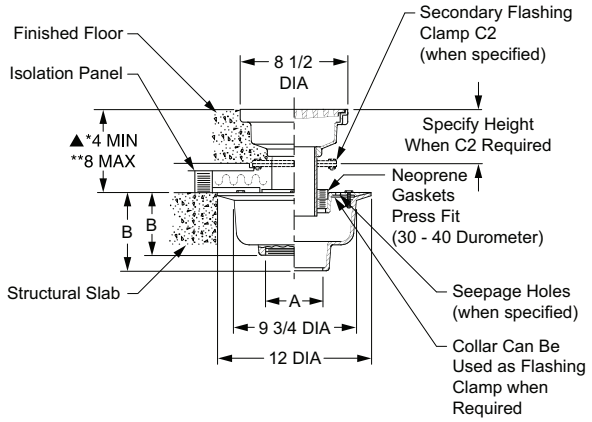

A OUTLET SIZE	TOP SIZE	FREE AREA SQ IN	†DUCO CI	DUCO CI PB TOP	DUCO CI NB TOP	APPROX. WT. LBS.
02, 03, 04"	8 1/2"	14.25	**2,294.00**	**2,887.00**	**3,027.00**	90

REGULARLY FURNISHED: Duco Cast Iron Lower Body and Flashing Collar, Adjustable Nipple, Upper Body, Grate and Neoprene Isolation Gaskets.

OUTLET VARIATIONS (Specify type of outlet and pipe size in inches.)

Outlet Type	Outlet Designation Outlet Type/Pipe Size	"B" Body HT. DIM.	ADD
Inside Caulk	C02, C03, C04	6"	**N/C**
Speedi-Set Outlet SW	L02, L03, L04	6"	**N/C**
Speedi-Set Outlet XH	LXH02, LXH03, LXH04	6"	**N/C**
Threaded	T02, T03, T04	4 3/4"	**104.00**
No-Hub	Y02, Y03, Y04	6"	**N/C**

OPTIONS:		ADD
-C	Underdeck Clamp	**325.00**
-G	Galvanized CI	**1,628.00**
-R	Sump Receiver Plate	**366.00**
-U	Vandal Proof Screws	**199.00**
-W	With Seepage Holes	**202.00**

*Add 1/4" for Nickel Bronze or Polished Bronze Top.
**If greater dimension than shown from lower flange to top is required specify a longer nipple.
▲Nipple may require cutting to achieve minimum dimension.

†REGULARLY FURNISHED

FIG. 9345 DRAIN FOR FLOATING (ISOLATED) FLOOR SYSTEMS

FUNCTION: Used in areas which may have to be isolated from the other parts of the building; such as mechanical equipment rooms, studios, music rooms, laboratories and data processing areas.

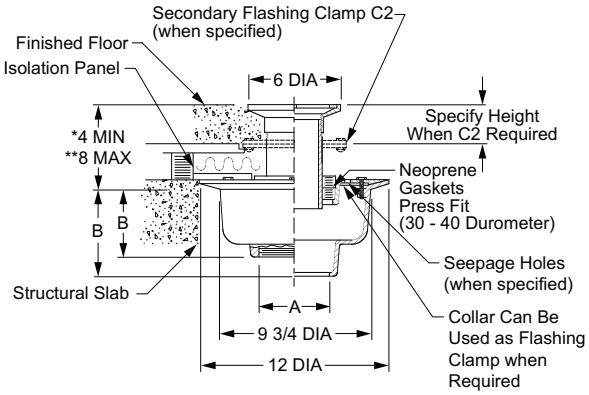

OUTLET VARIATIONS (Specify type of outlet and pipe size in inches.)

Outlet Type	Outlet Designation Outlet Type/Pipe Size	"B" Body HT. DIM.	ADD
Inside Caulk	C02, C03, C04	6"	N/C
Speedi-Set Outlet SW	L02, L03, L04	6"	N/C
Speedi-Set Outlet XH	LXH02, LXH03, LXH04	6"	N/C
Threaded	T02, T03, T04	4 3/4"	104.00
No-Hub	Y02, Y03, Y04	6"	N/C

OPTIONS:		ADD
-C	Underdeck Clamp	325.00
-G	Galvanized CI	1,628.00
-R	Sump Receiver Plate	366.00
-W	With Seepage Holes	202.00

**If greater dimension than shown from lower flange to top is required specify a longer nipple.

A OUTLET SIZE	TOP SIZE	FREE AREA SQ IN	†DUCO CI PB TOP	DUCO CI NB TOP	APPROX. WT. LBS.
02, 03, 04"	8 1/2"	7	1,868.00	1,985.00	90

REGULARLY FURNISHED: Duco Cast Iron Lower Body and Flashing Collar, Duco Cast Iron Top Drain Body with Polished Bronze Top and Neoprene Isolation Gasket.

SPECIALTIES

FIG. 9350 SERIES CLEANOUT FOR FLOATING (ISOLATED) FLOOR SYSTEMS

FUNCTION: Used in areas which may have to be isolated from the other parts of the building; such as mechanical equipment rooms, studios, music rooms, laboratories and data processing areas.

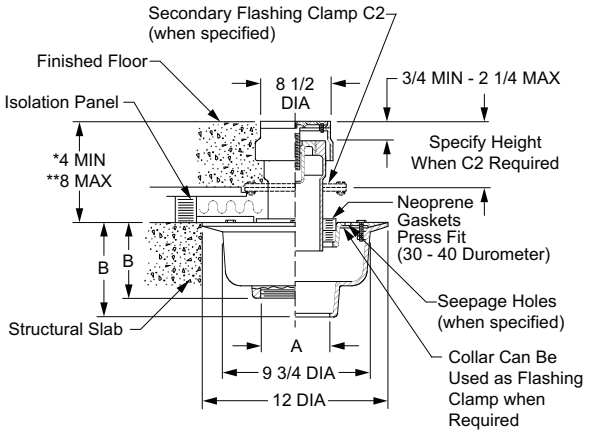

OUTLET VARIATIONS (Specify type of outlet and pipe size in inches.)

Outlet Type	Outlet Designation Outlet Type/Pipe Size	"B" Body HT. DIM.	ADD
Inside Caulk	C02, C03, C04	6"	N/C
Speedi-Set Outlet SW	L02, L03, L04	6"	N/C
Speedi-Set Outlet XH	LXH02, LXH03, LXH04	6"	N/C
Threaded	T02, T03, T04	4 3/4"	104.00
No-Hub	Y02, Y03, Y04	6"	N/C

OPTIONS:		ADD
-C2	Secondary Flashing Clamp	249.00
-G	Galvanized CI	1,534.00
-QC	Round Top Recessed f/Terrazzo (Fig 9354)	476.00
-S	With Square Top (Fig 9351)	N/C
-S-QC	Square Top Recessed f/Terrazzo (Fig 9355)	476.00
-S-TC	Square Top Recessed f/Tile (Fig 9353)	N/C
-TC	Round Top Recessed f/Tile (Fig 9352)	N/C
-W	With Seepage Holes	202.00

**If greater dimension than shown from lower flange to top is required specify a longer nipple.

A OUTLET SIZE	†DUCO CI PB TOP	DUCO CI NB TOP	APPROX. WT. LBS.
02, 03, 04"	2,178.00	2,257.00	90

REGULARLY FURNISHED: Duco Cast Iron Lower Body and Flashing Collar, Duco Cast Iron Adjustable Ferrule and Frame with Polished Bronze Top, Bronze Cleanout Plug in Ferrule and Neoprene Isolation Gasket.

†REGULARLY FURNISHED

FIG. 9502 SMITH SPEEDI-SEAL NEOPRENE GASKET

FUNCTION: Used with most Smith drains having a inside caulk bottom outlet. The "Speedi-Seal" gasket replaces the caulking allowing for a quicker and more reliable seal. It can be used with most piping materials, including service weight, extra heavy and no-hub cast iron, steel and plastic pipe.

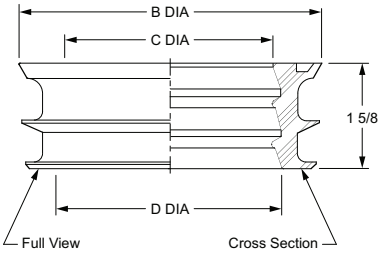

02, 03, 04 Sizes

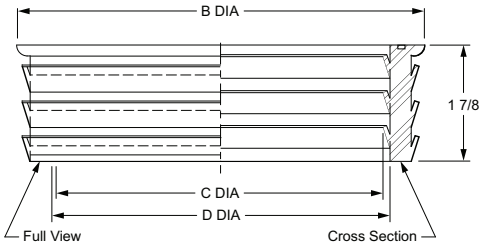

05, 06 Sizes

FIGURE NO	SIZE	B DIA	C DIA	D DIA	LIST PRICE	APPROX. WT. LBS.	GASKET-PIPE COMPATIBILITY						
							CAST IRON NO-HUB	ABS	PVC	PVC THIN WALL	STEEL	COPPER DWV	GLASS
9502-02	02" SW	3 1/2"	2 3/16"	2 7/16"	**73.00**	1/4	X			X		X	X
9502-03	03" SW	4 5/8"	3 1/8"	3 7/16"	**73.00**	3/8	X			X		X	
9502-04	04" SW	5 1/2"	4 1/8"	4 7/16"	**73.00**	3/8	X			X		X	
9502-05	05" SW	6 13/32"	5 1/8"	5 11/32"	**73.00**	3/8	X						
9502-06	06" SW	7 1/2"	6 1/8"	6 3/8"	**73.00**	1/2	X						
9502-02XH	02" XH	3 1/2"	2 1/4"	2 1/2"	**73.00**	1/4		X	X		X		X
9502-03XH	03" XH	4 5/8"	3 5/16"	3 5/8"	**73.00**	3/8		X	X		X		X
9502-04XH	04" XH	5 1/2"	4 5/16"	4 5/8"	**73.00**	3/8		X	X		X		X
9502-05XH	05" XH	6 13/32"	5 5/16"	5 17/32"	**73.00**	1/2							
9502-06XH	06" XH	7 1/2"	6 11/32"	6 9/16"	**73.00**	5/8							

NOTE: A threaded outlet with a plastic adaptor in lieu of the Speedi-Seal connection is recommended when plastic pipe is used in conjunction with roof drains.

NOTE: Use an adhesive lubricant with plastic pipe.

REGULARLY FURNISHED: Molded Neoprene Gasket.

FIG. RH9500 SERIES RAINWATER HARVESTING

Rainwater Harvesting - RH9500 Series - Contact your local Jay R. Smith Representative for pricing.

FIG. 9508 SPEEDI-SET® REINFORCED NEOPRENE GASKET

FUNCTION: Used with Smith Suffix-L Speedi-Set® Drains, etc. to form a speedi-set push-on connection with all piping materials, including service weight, extra heavy and NO-HUB soil pipe, steel and plastic pipe. Heavy duty steel reinforcing rings molded integral with gasket ensure positive pipe and gasket stop at and after assembly for a totally reliable connection seal.

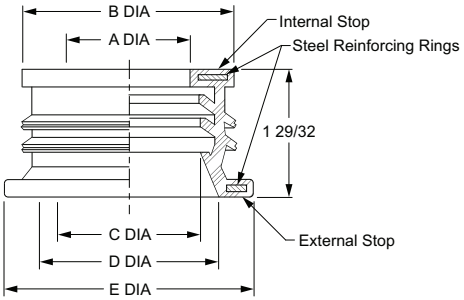

INSTALLATION: The Speedi-Set® reinforced neoprene gasket is normally factory assembled in drain outlet. For field assembly, coat interior of drain outlet with soil pipe joint lubricant and push gasket into place until it "Bottoms Out" on the external stop. Then apply the lubricant to gasket interior, place drain over pipe and push on until pipe end contacts the gasket's internal stop to complete the connection. If pipe is oversize, it may be necessary to tap the drain in place. In such cases, a wood block is recommended to avoid damage to casting.

FIGURE NO	SIZE	A DIA	B DIA	C DIA	D DIA	E DIA	LIST PRICE	APPROX. WT. LBS.	GASKET-PIPE COMPATIBILITY						
									CAST IRON NO-HUB	ABS	PVC	PVC THIN WALL	STEEL	COPPER DWV	GLASS
9508-02	02" SW (-L)	1 3/4"	2 15/16"	2 1/32"	2 9/16"	3 1/2"	**73.00**	3/8	X			X		X	
9508-03	03" SW (-L)	2 3/4"	3 15/16"	3"	3 5/8"	4 3/8"	**73.00**	3/8	X			X		X	
9508-04	04" SW (-L)	3 3/4"	4 15/16"	4 1/16"	4 11/16"	5 5/8"	**73.00**	1/2	X						
9508-02XH	02" XH (-LXH)	1 7/8"	2 15/16"	2 1/32"	2 9/16"	3 1/2"	**73.00**	1/2		X	X		X		X
9508-03XH	03" XH (-LXH)	2 3/4"	3 15/16"	3 1/16"	3 5/8"	4 3/8"	**73.00**	5/8		X	X		X		X
9508-04XH	04" XH (-LXH)	3 3/4"	4 15/16"	4 3/16"	4 11/16"	5 5/8"	**73.00**	3/4		X	X		X		X

REGULARLY FURNISHED: Molded Reinforced Neoprene Gasket.

†REGULARLY FURNISHED

FIG. 9600 - FLOOR DRAIN WITH ADJUSTABLE STRAINER HEAD FOR LIGHT DUTY USE

Outlet Size	Round Strainer Size	†-CF8 (304) Stainless Steel	-CF8M (316) Stainless Steel
02, 03, 04”	05”	POA	POA
02, 03, 04”	06”	POA	POA

Outlet Size	Square Strainer Size	†-CF8 (304) Stainless Steel	-CF8M (316) Stainless Steel
02, 03, 04”	05”	POA	POA
02, 03, 04”	06”	POA	POA

FIG. 9604 - SPECIAL STAINLESS STEEL DRAIN

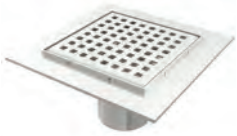

Outlet Size	†-CF8 (304) Stainless Steel	-CF8M (316) Stainless Steel
02”	POA	POA

FIG. 9610 - 6” ROUND TOP FLOOR DRAIN FOR MEDIUM DUTY USE

Outlet Size	†-CF8 (304) Stainless Steel	-CF8M (316) Stainless Steel
02, 03, 04”	POA	POA

FIG. 9614, 9615 - 8” ROUND TOP FLOOR DRAIN WITH MEDIUM DUTY LOOSE SET SLOTTED GRATE

Fig No.	Outlet Size	Sump Depth	†-CF8 (304) Stainless Steel	-CF8M (316) Stainless Steel
9614	02, 03, 04”	04”	POA	POA
9615	02, 03, 04”	06”	POA	POA

FIG. 9614-RF, 9614-SRF - 8” ROUND OR SQUARE TOP FLOOR DRAIN FOR HEAVY DUTY RIM FLOW GRATE

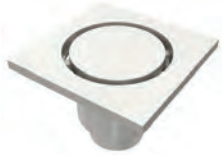

Fig No.	Outlet Size	Sump Depth	†-CF8 (304) Stainless Steel	-CF8M (316) Stainless Steel
9614-RF	02, 03, 04”	04”	POA	POA
9614-SRF	02, 03, 04”	04”	POA	POA

FIG. 9614-S - 8” SQUARE TOP

Outlet Size	†-CF8 (304) Stainless Steel	-CF8M (316) Stainless Steel
02, 03, 04”	POA	POA

FIG. 9614-SBG - 8” SQUARE TOP WITH BAR GRATE

Outlet Size	†-CF8 (304) Stainless Steel	-CF8M (316) Stainless Steel
02, 03, 04”	POA	POA

SPECIALTIES

FOR INFORMATION ON POA ITEMS, PLEASE CONTACT YOUR LOCAL JAY R. SMITH REPRESENTATIVE

†REGULARLY FURNISHED

FIG. 9620, 9621, 9622 - 10” ROUND TOP

Fig No.	Outlet Size	Sump Depth	†-CF8 (304) Stainless Steel	-CF8M (316) Stainless Steel
9620	02, 03, 04”	04”	POA	POA
9621	02, 03, 04”	06”	POA	POA
9622	02, 03, 04”	08”	POA	POA

FIG. 9620-RF/SRF, 9621-RF/SRF - 10” ROUND OR SQUARE TOP FLOOR DRAIN WITH HEAVY DUTY RIM FLOW GRATE

Fig No.	Outlet Size	Sump Depth	†-CF8 (304) Stainless Steel	-CF8M (316) Stainless Steel
9620-RF	02, 03, 04”	04”	POA	POA
9620-SRF	02, 03, 04”	04”	POA	POA
9621-RF	02, 03, 04”	06”	POA	POA
9621-SRF	02, 03, 04”	06”	POA	POA

FIG. 9620-S, 9621-S - 10” SQUARE TOP

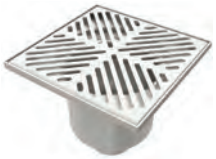

Fig No.	Outlet Size	Sump Depth	†-CF8 (304) Stainless Steel	-CF8M (316) Stainless Steel
9620-S	02, 03, 04”	04”	POA	POA
9621-S	02, 03, 04”	06”	POA	POA

FIG. 9620-SBG, 9621-SBG - 10” SQUARE TOP WITH BAR GRATE

Fig No.	Outlet Size	Sump Depth	†-CF8 (304) Stainless Steel	-CF8M (316) Stainless Steel
9620-SBG	02, 03, 04”	05”	POA	POA
9621-SBG	02, 03, 04”	07”	POA	POA

FIG. 9630, 9631, 9632, 9633 - 12” ROUND TOP

Fig No.	Outlet Size	Sump Depth	†-CF8 (304) Stainless Steel	-CF8M (316) Stainless Steel
9630	02, 03, 04”	04”	POA	POA
9631	02, 03, 04”	06”	POA	POA
9632	02, 03, 04”	08”	POA	POA
9633	02, 03, 04”	10”	POA	POA

FIG. 9630-RF, 9631-RF, 9632-RF - 12” ROUND HEAVY DUTY RIM FLOW GRATE

Fig No.	Outlet Size	Sump Depth	†-CF8 (304) Stainless Steel	-CF8M (316) Stainless Steel
9630-RF	02, 03, 04”	04”	POA	POA
9631-RF	02, 03, 04”	06”	POA	POA
9632-RF	02, 03, 04”	08”	POA	POA

FIG. 9630-S, 9631-S, 9632-S - 12” SQUARE TOP

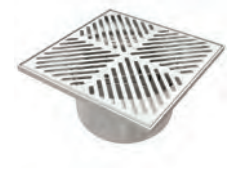

Fig No.	Outlet Size	Sump Depth	†-CF8 (304) Stainless Steel	-CF8M (316) Stainless Steel
9630-S	02, 03, 04”	04”	POA	POA
9631-S	02, 03, 04”	06”	POA	POA
9632-S	02, 03, 04”	08”	POA	POA

FOR INFORMATION ON POA ITEMS, PLEASE CONTACT YOUR LOCAL JAY R. SMITH REPRESENTATIVE

†REGULARLY FURNISHED

FIG. 9630-SBG, 9631-SBG, 9632-SBG - 12” SQUARE TOP WITH BAR GRATE

Fig No.	Outlet Size	Sump Depth	†-CF8 (304) Stainless Steel	-CF8M (316) Stainless Steel
9630-SBG	02, 03, 04”	05”	POA	POA
9631-SBG	02, 03, 04”	07”	POA	POA
9632-SBG	02, 03, 04”	09”	POA	POA

FIG. 9630-SRF, 9631-SRF, 9632-SRF - 12” SQUARE HEAVY DUTY RIM FLOW

Fig No.	Outlet Size	Sump Depth	†-CF8 (304) Stainless Steel	-CF8M (316) Stainless Steel
9630-SRF	02, 03, 04”	05”	POA	POA
9631-SRF	02, 03, 04”	07”	POA	POA
9632-SRF	02, 03, 04”	09”	POA	POA

FIG. 9635-S, 9636-S, 9637-S, 9638-S - 14” SQUARE TOP

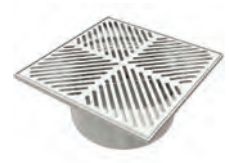

Fig No.	Outlet Size	Sump Depth	†-CF8 (304) Stainless Steel	-CF8M (316) Stainless Steel
9635-S	02, 03, 04, 06”	04”	POA	POA
9636-S	02, 03, 04, 06”	06”	POA	POA
9637-S	02, 03, 04, 06”	08”	POA	POA
9638-S	02, 03, 04, 06”	10”	POA	POA

SPECIALTIES

FIG. 9635-RF, 9636-RF, 9637-RF, 9638-RF - 14” ROUND HEAVY DUTY RIM FLOW GRATE

Fig No.	Outlet Size	Sump Depth	†-CF8 (304) Stainless Steel	-CF8M (316) Stainless Steel
9635-RF	02, 03, 04, 06”	04”	POA	POA
9636-RF	02, 03, 04, 06”	06”	POA	POA
9637-RF	02, 03, 04, 06”	08”	POA	POA
9638-RF	02, 03, 04, 06”	10”	POA	POA

FIG. 9635-SBG, 9636-SBG, 9637-SBG, 9638-SBG - 14” SQUARE TOP WITH BAR GRATE

Fig No.	Outlet Size	Sump Depth	†-CF8 (304) Stainless Steel	-CF8M (316) Stainless Steel
9635-SBG	02, 03, 04, 06”	04”	POA	POA
9636-SBG	02, 03, 04, 06”	06”	POA	POA
9637-SBG	02, 03, 04, 06”	08”	POA	POA
9638-SBG	02, 03, 04, 06”	10”	POA	POA

FIG. 9635-SRF, 9636-SRF, 9637-SRF, 9638-SRF - 14” SQUARE HEAVY DUTY RIM FLOW GRATE

Fig No.	Outlet Size	Sump Depth	†-CF8 (304) Stainless Steel	-CF8M (316) Stainless Steel
9635-SRF	02, 03, 04”	04”	POA	POA
9636-SRF	02, 03, 04”	06”	POA	POA
9637-SRF	02, 03, 04”	08”	POA	POA
9638-SRF	02, 03, 04”	10”	POA	POA

FOR INFORMATION ON POA ITEMS, PLEASE CONTACT YOUR LOCAL JAY R. SMITH REPRESENTATIVE

†REGULARLY FURNISHED

FIG. 9642, 9643 - 14 GAUGE SS AREA & INDIRECT WASTE FLOOR DRAIN WITH 8” SQUARE TOP

Fig No.	Outlet Size	Sump Depth	†-CF8 (304) Stainless Steel	-CF8M (316) Stainless Steel
9642	02, 03, 04”	04”	POA	POA
9643	02, 03, 04”	06”	POA	POA

FIG. 9646, 9646-S - 6” ROUND AND 6 1/2” SQUARE CLEANOUT

Fig No.	Outlet Size	†-CF8 (304) Stainless Steel	-CF8M (316) Stainless Steel
9646	02, 03, 04”	POA	POA
9646-S	02, 03, 04”	POA	POA

FIG. 9646-ST, 9646-S-ST - 6” SMOOTH ROUND AND 6 1/2” SMOOTH SQUARE CLEANOUT

Fig No.	Outlet Size	†-CF8 (304) Stainless Steel	-CF8M (316) Stainless Steel
9646-ST	02, 03, 04”	POA	POA
9646-S-ST	02, 03, 04”	POA	POA

FIG. 9680 - 16” ROOF DRAIN

Fig No.	Outlet Size	†-CF8 (304) Stainless Steel	-CF8M (316) Stainless Steel
9680	02, 03, 04”	POA	POA

FIG. 9682 - 10 1/2” ROOF DRAIN

Fig No.	Outlet Size	†-CF8 (304) Stainless Steel	-CF8M (316) Stainless Steel
9682	02, 03, 04”	POA	POA

FIG. 9685 - SCUPPER DRAIN

Fig No.	Outlet Size	†-CF8 (304) Stainless	-CF8M (316) Stainless Steel
9685	02, 03, 04”	POA	POA

FOR INFORMATION ON POA ITEMS, PLEASE CONTACT YOUR LOCAL JAY R. SMITH REPRESENTATIVE

†REGULARLY FURNISHED

FIG. 9690 SERIES 14 GAGE STAINLESS STEEL FLOOR, AREA & INDIRECT WASTE DRAINS W/12" SQUARE TOP

FUNCTION: Used in nuclear and fossil fuel power stations, chemical plants, laboratories and other areas where the corrosion resistance of type 304 stainless steel is satisfactory for the intended service. Also used in other locations such as breweries, dairies, creameries and similar processing plants where superior corrosion resistance, durability and longevity are required. Excellent for use in restaurants, schools and all types of food handling areas for ultimate sanitation.

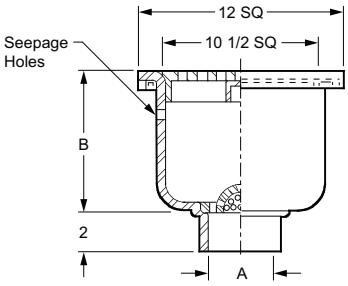

With Dome Bottom Strainer

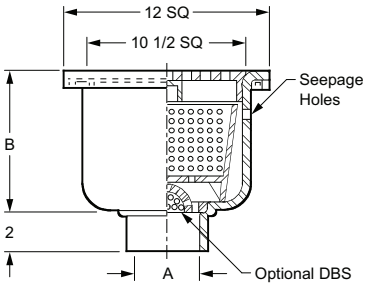

With Sediment Bucket

FIG. NO. w/DOME STRAINER	A OUTLET SIZE	B SUMP DEPTH	TOP SIZE	†LESS FLANGE	WITH FLANGE	APPROX. WEIGHT LBS
9691	02", 03", 04"	4"	12" SQ	**POA**	**POA**	14
9692	02", 03", 04"	6"	12" SQ	**POA**	**POA**	17
9693	02", 03", 04"	8"	12" SQ	**POA**	**POA**	20
9694	02", 03", 04"	10"	12" SQ	**POA**	**POA**	23
FIG. NO. SEDIMENT BUCKET	**A OUTLET SIZE**	**B SUMP DEPTH**	**TOP SIZE**	**†LESS FLANGE**	**WITH FLANGE**	**APPROX. WEIGHT LBS**
9696	02", 03", 04"	4"	12" SQ	**POA**	**POA**	16
9697	02", 03", 04"	6"	12" SQ	**POA**	**POA**	19
9698	02", 03", 04"	8"	12" SQ	**POA**	**POA**	22
9699	02", 03", 04"	10"	12" SQ	**POA**	**POA**	25

REGULARLY FURNISHED:
14 Gage Type 304 SS Receptor Body with Seepage Control Holes, Cast Type 316 SS Ribbed Non-Tilt Loose Set Grate with 1/2" Square Holes. Perforated SS Dome Bottom Strainer or Sediment Bucket as Indicated by Figure Number.

OUTLET VARIATIONS (Specify type of outlet and pipe size in inches.)

Outlet Type	Outlet Designation Outlet Type/Pipe Size	ADD
Butt Weld	BW02, BW03, BW04 Sched. -5	**POA**
	BW02, BW03, BW04 Sched. -10	**POA**
	BW02, BW03, BW04 Sched. -40	**POA**
Threaded	T02, T03, T04 Male or Female	**POA**
No-Hub	Y02, Y03, Y04	**POA**

OPTIONS:		ADD
-C	Flashing Clamp (Type 304)	**POA**
-LSH	Less Seepage Control Holes	**POA**
-P	Trap Primer Connection	**POA**
-U	Vandal Proof Grate	**POA**
-316	Type 316 Stainless Steel Bodies and Grates	**POA**
Models with Buckets:		
-BS	With Type 304 SS Mesh lined Bucket	**POA**
-DBS	With Type 304 SS Dome Bottom Strainer	**POA**
-SBP	With Type 304 SS Solid Bottom Ported Bucket	**POA**

OPTIONAL TOP GRATES FOR SPECIALIZED AND INDIRECT WASTE APPLICATIONS - THE FOLLOWING ARE TYPE 304 (CF8) TYPE 316 (CF8M) GRATES ARE POA

		DEDUCT
-10	Less Stainless Steel Grate	**POA**
		ADD
-12	With Type 304 SS 1/2 Grate	**POA**
-13	With Type 304 SS 3/4 Grate	**POA**
-14	With Type 304 SS Grate with 2 1/2" SQ Center Hole	**POA**
-15	With Type 304 SS Recessed Grate with Bar Handle	**POA**
-21	With Type 304 SS Grate with 4" DIA Type 304 SS Funnel	**POA**
-22	With Type 304 SS Grate with 6" DIA Type 304 SS Funnel	**POA**
-25	With Type 304 SS Grate with 8 1/4 x 3 1/4 x 4 1/2" High Oval Type 304 SS Funnel	**POA**
-41	With Type 304 SS Solid Cover	**POA**
-42	With Type 304 SS 1/2 Solid Cover	**POA**
-43	With Type 304 SS 3/4 Solid Cover	**POA**
-44	With Type 304 SS Solid Cover with 2 1/2" SQ Center Hole	**POA**
-61	With Type 304 SS Heelproof Ribbed Loose-set Non-tilt Grate with 1/4" Square Holes	**POA**
-63	With Type 304 SS Medium Duty Ribbed Loose-set Non-tilt Grate with 1/4" Square Holes	**POA**
-64	With Type 304 SS Heavy Duty Ribbed Loose-set Non-tilt Grate with 1/2" Square Holes	**POA**
-66	With Type 304 SS Extra Heavy Duty Ribbed Loose-set Non-tilt Grate with 1/2" Square Holes	**POA**
-68	With Type 304 SS Extra Heavy Duty Ribbed Loose-set Non-tilt 3/4 Grate with 1/2" Square Holes	**POA**
-69	With 1" Thick Underbolted NB Rim and Extra Heavy Duty Cast Type 304 SS Secured Grate	**POA**

COONTRACTOR FRIENDLY

FIG. 9700 CAST SS BODY W/ ADJUSTABLE STRAINER HEAD AND SATIN FINISH CAST SS GRATE

FUNCTION: General service floor drain for use in finished areas where foot traffic is expected, and where a corrosion resistant drain is required.

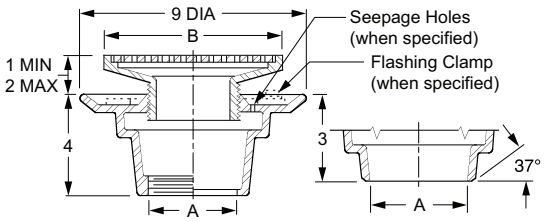

Butt Weld Outlet Schedule 40 Reg. Furn.

A OUTLET SIZE	B STRAINER SIZE	FREE AREA SQ IN	†CF8 (304) STAINLESS STEEL	CF8M (316) STAINLESS STEEL	-A27 CARBON STEEL	APPROX. WT. LBS.
02, 03, 04"	†07" Dia	12.5	**POA**	**POA**	**POA**	15
02, 03, 04"	06 x 06" SQ	12.5	**POA**	**POA**	**POA**	15

REGULARLY FURNISHED: CF8 (Equivalent to Type 304) Rough Finish Stainless Steel Body and Round Adjustable Strainer Head with Satin Finished Top.

OUTLET VARIATIONS (Specify type of outlet and pipe size in inches.)

Outlet Type	Outlet Designation Outlet Type/Pipe Size	ADD
Butt Weld	BW02, BW03, BW04 Specify Schedule 5, 10, 40, or 80	**POA**
Inside Caulk	C02, C03	**POA**
Threaded	T02, T03, T04	**POA**

OPTIONS:		ADD
-B	Stainless Steel Sediment Bucket (Type 304)	**POA**
-C	Flashing Clamp with Seepage Openings (Type 304)	**POA**
-P	Trap Primer Connection	**POA**
-SC	Solid Cover (Type 304)	**POA**
-U	Vandal Proof Grate	**POA**
-WSH	With Seepage Holes	**POA**

FIG. 9703, 9704 ROUGH FINISH STAINLESS STEEL FUNNELS

FUNCTION: Used to receive waste water from indirect waste lines. Funnels are attached to the grate with concealed bolts permitting funnel to be moved to different positions on the grate.

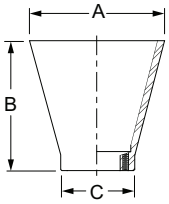

Fig. 9703

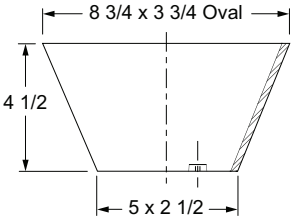

Fig. 9704

OPTIONS: **ADD**

-NB Nickel Bronze ..... **See Fig 3580**
-SF Satin Finish ..... **POA**

FIGURE NO.	A TOP SIZE DIA	B	C	†-CF8 (304) SS	-CF8M (316) SS	-A27 CARBON STEEL	APPROX. WT LBS.
9703	4"	4 1/4	2 1/2	POA	POA	POA	3
9703-6	6"	4 1/2	2 1/2	POA	POA	POA	4

FIGURE NO.	TOP SIZE	†-CF8 (304) SS	-CF8M (316) SS	-A27 CARBON STEEL	APPROX. WT LBS.
9704	8 3/4 x 3 3/4"	POA	POA	POA	4

REGULARLY FURNISHED: CF8 (Equivalent to Type 304) Rough Finish Stainless Steel with Stainless Steel Bolts and Washers.

FIG. 9705 FLOOR DRAIN W/8 1/2" ROUND MEDIUM DUTY TOP W/EXTENDED INTEGRAL FLANGE FOR WELDING TO STEEL DECKS

FUNCTION: Used in areas where drain body is welded to deck or where waterproof traffic floor coverings are applied and where a corrosion resistant drain is required.

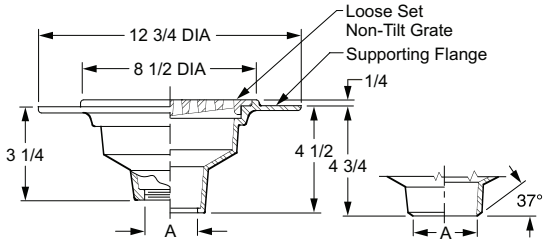

Butt Weld Outlet

A OUTLET SIZE	FREE AREA SQ IN	†-CF8 (304) STAINLESS STEEL	-CF8M (316) STAINLESS STEEL	-A27 CARBON STEEL	APPROX. WT. LBS
02, 03, 04"	20.50	POA	POA	POA	21

REGULARLY FURNISHED: CF8 (Equivalent to Type 304) Rough Finish Stainless Steel Body and Loose Set Non-Tilt Grate.

OUTLET VARIATIONS (Specify type of outlet and pipe size in inches.)

Outlet Type	Outlet Designation Outlet Type/Pipe Size	ADD
Butt Weld	BW02, BW03, BW04 Specify Schedule 5, 10, †40, or 80	POA
Inside Caulk	C02, C03, C04	POA
Threaded	T02, T03, T04	POA

OPTIONS: **ADD**

-B Stainless Steel Sediment Bucket (Type 304) ..... **POA**
-SC Solid Scoriated Cover ..... **POA**
-SF Satin Finish ..... **POA**
-U Vandal Proof Screws ..... **POA**

DEDUCT

-CIG Cast Iron Grate ..... **POA**
-RB Rough Bronze Grate ..... **POA**
-RNB Rough NB Grate ..... **POA**

FIG. 9710 FLOOR DRAIN WITH 8 1/2" ROUND MEDIUM DUTY TOP

FUNCTION: Used in floors where corrosive liquids must drain or be discharged. Solid top variation with closure plug allows placement of drains for future use. The advantage of stainless steel over high silicon iron is that it resists corrosive liquids, and accommodates machining for threaded outlets, secured top and/or flashing clamps. These drains are readily adaptable to most types of drain line piping materials. Type 304 stainless steel will handle a variety of corrosive wastes which are found in laboratories, chemical, atomic energy, photographic processing, dairy, breweries and bottling plants.

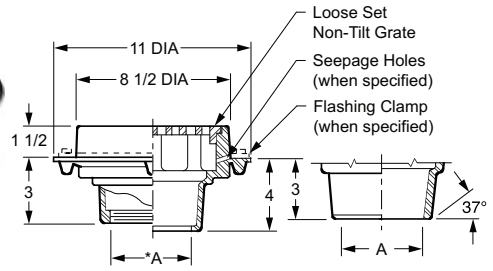

Butt Weld Outlet

A OUTLET SIZE	FREE AREA SQ IN	†-CF8 (304) STAINLESS STEEL	-CF8M (316) STAINLESS STEEL	-A27 CARBON STEEL	APPROX. WT. LBS
02, 03, 04"	20.50	POA	POA	POA	21

REGULARLY FURNISHED: CF8 (Equivalent to Type 304) Rough Finish Stainless Steel Body, and Loose Set Non-Tilt Grate.

OUTLET VARIATIONS (Specify type of outlet and pipe size in inches.)

Outlet Type	Outlet Designation Outlet Type/Pipe Size	ADD
Butt Weld	BW02, BW03, BW04 Specify Schedule 5, 10, †40, or 80	POA
Inside Caulk	C02, C03, C04	POA
Threaded	T02, T03, T04	POA

OPTIONS: **ADD**

ALL IN TYPE 304

-B Sediment Bucket ..... **POA**
-C Flashing Clamp ..... **POA**
-E04 4" Extension ..... **POA**
-FBS Flat Bottom Strainer ..... **POA**
-SC Solid Scoriated Cover ..... **POA**
-SF Satin Finish Top ..... **POA**
-TP 3/4" Test Plug (for Closure Plug) ..... **POA**
-U Vandal Proof Screws ..... **POA**
-W Seepage Holes ..... **POA**
-XP Closure Plug & Gasket
Plastic (XPP) ..... **POA**
Type 304SS (XPSS) ..... **POA**

DEDUCT

-CIG Cast Iron Grate ..... **POA**
-RB Rough Bronze Grate ..... **POA**
-RNB Rough NB Grate ..... **POA**

FIG. 9713 SHALLOW BODY FLOOR DRAIN WITH 8 1/2" ROUND MEDIUM DUTY TOP

FUNCTION: Used in moderate traffic areas where waste water contains no sediment or debris. Used where a shallow body is required.

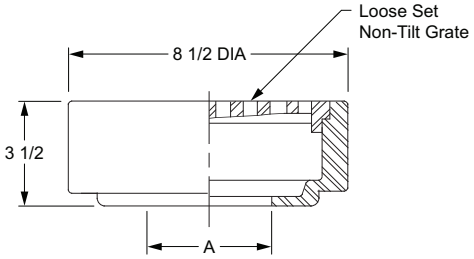

A OUTLET SIZE	FREE AREA SQ IN	†-CF8 (304) STAINLESS STEEL	-CF8M (316) STAINLESS STEEL	-A27 CARBON STEEL	APPROX. WT. LBS
02, 03, 04"	20.50	POA	POA	POA	21

REGULARLY FURNISHED: CF8 (Equivalent to Type 304) Rough Finish Stainless Steel Body and Loose Set Non-Tilt Grate.

OUTLET VARIATIONS (Specify type of outlet and pipe size in inches.)

Outlet Type	Outlet Designation Outlet Type/Pipe Size	ADD
Butt Weld	BW02, BW03, BW04 Specify Schedule 5, 10, †40, or 80	POA
Inside Caulk	C02, C03, C04	POA

OPTIONS:		ADD
		ALL IN TYPE 304
-B	Sediment Bucket	POA
-FBS	Flat Bottom Strainer	POA
-E04	4" Extension	POA
-SF	Satin Finish Top	POA
-TP	3/4" Test Plug (for Closure Plug)	POA
-U	Vandal Proof Screws	POA
-XP	Closure Plug & Gasket	
	Plastic (XPP)	POA
	Type 304 SS (XPSS)	POA
		DEDUCT
-CIG	Cast Iron Grate	POA
-RB	Rough Bronze Grate	POA
-RNB	Rough NB Grate	POA

SPECIALTIES

FIG. 9715 FLOOR DRAIN WITH 8 1/2" ROUND MEDIUM DUTY TOP WITH 90° ELBOW

FUNCTION: Used in floors where corrosive liquids must drain or be discharged. Solid top variation with closure plug allows placement of drains for future use. The advantage of stainless steel over high silicon iron is that it resists corrosive liquids, and accommodates machining for threaded outlets, secured top and/or flashing clamps. These drains are readily adaptable to most types of drain line piping materials. Type 304 stainless steel will handle a variety of corrosive wastes which are found in laboratories, chemical, atomic energy, photographic processing, dairy, breweries and bottling plants.

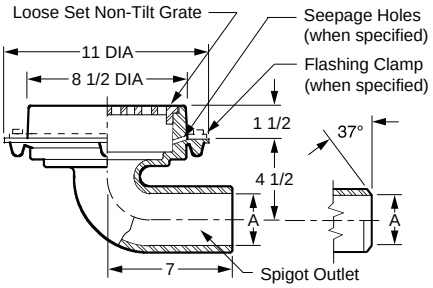

OUTLET VARIATIONS (Specify type of outlet and pipe size in inches.)

Outlet Type	Outlet Designation Outlet Type/Pipe Size	ADD
Butt Weld	BW02, BW03, BW04 Specify Schedule 5, 10, †40, or 80	POA
Spigot	S02, S03, S04	POA

OPTIONS:		ADD
		ALL IN TYPE 304
-B	Sediment Bucket	POA
-C	Flashing Clamp	POA
-E04	4" Extension	POA
-SC	Solid Scoriated Cover	POA
-SF	Satin Finish Top	POA
-TP	3/4" Test Plug (for Closure Plug)	POA
-U	Vandal Proof Screws	POA
-W	Seepage Holes	POA
-XP	Closure Plug & Gasket	
	Plastic (XPP)	POA
	Type 304 SS (XPSS)	POA
		DEDUCT
-CIG	Cast Iron Grate	POA
-RB	Rough Bronze Grate	POA
-RNB	Rough NB Grate	POA

A OUTLET SIZE	FREE AREA SQ IN	†-CF8 (304) STAINLESS STEEL	-CF8M (316) STAINLESS STEEL	-A27 CARBON STEEL	APPROX. WT. LBS
02, 03, 04"	20.50	POA	POA	POA	21

REGULARLY FURNISHED: CF8 (Equivalent to Type 304) Rough Finish Stainless Steel Body, and Loose Set Non-Tilt Grate.

FIG. 9718 FLOOR DRAIN WITH 8 1/2" ROUND MEDIUM DUTY TOP WITH 90° ELBOW

FUNCTION: Used in moderate traffic areas where waste water contains no sediment or debris.

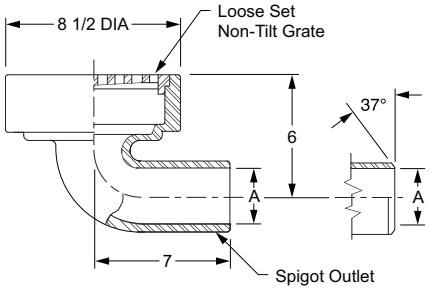

A OUTLET SIZE	FREE AREA SQ IN	†-CF8 (304) STAINLESS STEEL	-CF8M (316) STAINLESS STEEL	-A27 CARBON STEEL	APPROX. WT. LBS
02, 03, 04"	20.50	POA	POA	POA	30

REGULARLY FURNISHED: CF8 (Equivalent to Type 304) Rough Finish Stainless Steel Body and Loose Set Non-Tilt Grate.

OUTLET VARIATIONS (Specify type of outlet and pipe size in inches.)

Outlet Type	Outlet Designation Outlet Type/Pipe Size	ADD
Butt Weld	BW02, BW03, BW04 Specify Schedule 5, 10, †40, or 80	POA
Inside Caulk	C02, C03, C04	POA
Spigot	S02, S03, S04	POA

OPTIONS:		ADD
-B	Sediment Bucket (Type 304)	POA
-E04	4" Extension (Type 304)	POA
-SF	Satin Finish Top	POA
-TP	3/4" Test Plug (for Closure Plug)	POA
-U	Vandal Proof Screws	POA
-XP	Closure Plug and Gasket	
	Plastic (XPP)	POA
	Type 304 SS (XPSS)	POA
		DEDUCT
-CIG	Cast Iron Grate	POA
-RB	Rough Bronze Grate	POA
-RNB	Rough NB Grate	POA

FIG. 9720 FLOOR DRAIN W/8 1/2" ROUND TOP, SOLID SCORIATED COVER AND CLOSURE PLUG

FUNCTION: Used in floors and areas where a solid cover is required. Closure plug prevents sewer gases from entering the building through the drain.

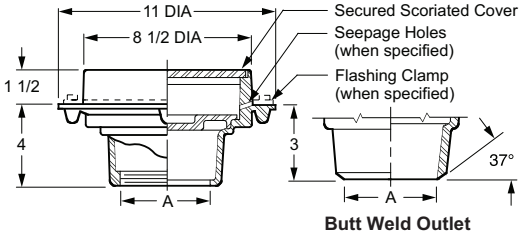

A OUTLET SIZE	†-CF8 (304) STAINLESS STEEL	-CF8M (316) STAINLESS STEEL	-A27 CARBON STEEL	APPROX. WT. LBS
02, 03, 04"	POA	POA	POA	23

REGULARLY FURNISHED: CF8 (Equivalent to Type 304) Rough Finish Stainless Steel Body, Secured Scoriated Cover and Stainless Steel Closure Plug with Gasket.

OUTLET VARIATIONS (Specify type of outlet and pipe size in inches.)

Outlet Type	Outlet Designation Outlet Type/Pipe Size	ADD
Butt Weld	BW02, BW03, BW04 Specify Schedule 5, 10, †40, or 80	POA
Inside Caulk	C02, C03, C04	POA
Threaded	T02, T03, T04	POA

OPTIONS:		ADD
-C	Flashing Clamp (Type 304)	POA
-E04	4" Extension (Type 304)	POA
-SF	Satin Finish Top	POA
-TP	3/4" Test Plug	POA
-U	Vandal Proof Cover	POA
-W	Seepage Holes	POA

DEDUCT FROM CF8 ONLY FOR:

-XPP	Plastic Closure Plug	POA

FIG. 9725 FLOOR DRAIN WITH 8 1/2" ROUND ADJUSTABLE TOP

FUNCTION: Used in moderate traffic areas where an adjustable top permits accurate positioning of grate to meet finished floor levels.

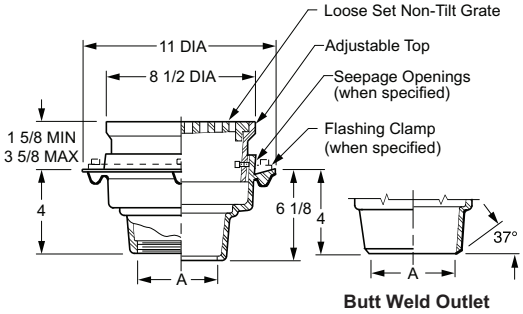

A OUTLET SIZE	FREE AREA SQ IN	†-CF8 (304) STAINLESS STEEL	-CF8M (316) STAINLESS STEEL	-A27 CARBON STEEL	APPROX. WT. LBS
02, 03, 04"	20.50	POA	POA	POA	30

REGULARLY FURNISHED: CF8 (Equivalent to Type 304) Rough Finish Stainless Steel Body, Loose Set Non-Tilt Grate with Adjustable Top.

OUTLET VARIATIONS (Specify type of outlet and pipe size in inches.)

Outlet Type	Outlet Designation Outlet Type/Pipe Size	ADD
Butt Weld	BW02, BW03, BW04 Specify Schedule 5, 10, †40, or 80	POA
Inside Caulk	C02, C03, C04	POA
Threaded	T02, T03, T04	POA

OPTIONS:		ADD
-B	Sediment Bucket (Type 304)	POA
-C	Flashing Clamp (Type 304)	POA
-E04	4" Extension (Type 304)	POA
-FBS	Flat Bottom Strainer (304)	POA
-SC	Solid Scor Cover (Type 304)	POA
-SF	Satin Finish Top	POA
-TP	3/4" Test Plug (for Closure Plug)	POA
-U	Vandal Proof Grate	POA
-W	Seepage Holes	POA
-XP	Closure Plug and Gasket	
	Plastic (XPP)	POA
	Type 304SS (XPSS)	POA
		DEDUCT
-CIG	Cast Iron Grate	POA
-RB	Rough Bronze Grate	POA
-RNB	Rough NB Grate	POA

FOR INFORMATION ON POA ITEMS, PLEASE CONTACT YOUR LOCAL JAY R. SMITH REPRESENTATIVE

†REGULARLY FURNISHED

FIG. 9730 FLOOR DRAIN WITH 12" ROUND HEAVY DUTY TOP

FUNCTION: Used in areas where waste water contains no sediment or debris and construction requires a shallow body.

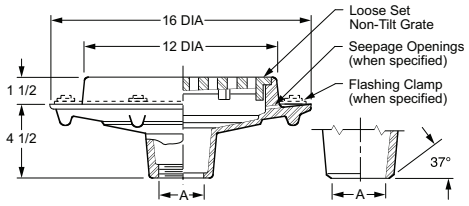

Butt Weld Outlet

A OUTLET SIZE	FREE AREA SQ IN	†-CF8 (304) STAINLESS STEEL	-CF8M (316) STAINLESS STEEL	-A27 CARBON STEEL	APPROX. WT. LBS
04"	27.63	POA	POA	POA	52
06"	27.63	POA	POA	POA	54

REGULARLY FURNISHED: CF8 (Equivalent to Type 304) Rough Finish Stainless Steel Body and Loose Set Non-Tilt Grate.

OUTLET VARIATIONS (Specify type of outlet and pipe size in inches.)

Outlet Type	Outlet Designation Outlet Type/Pipe Size	ADD
Butt Weld	BW04, BW06 Specify Schedule 5, 10, †40, or 80	POA
Inside Caulk	C04, C06	POA
Threaded	T04, T06	POA

OPTIONS:		ADD
-C	Flashing Clamp (Type 304)	POA
-SF	Satin Finish Top	POA
-U	Vandal Proof Grate	POA
-W	Seepage Holes	POA
		DEDUCT
-CIG	Cast Iron Grate	POA
-RB	Rough Bronze Grate	POA
-RNB	Rough NB Grate	POA

FIG. 9733 FLOOR DRAIN 15" ROUND TOP WITH HEAVY DUTY TRACTOR GRATE

FUNCTION: Used in areas where waste water contains no sediment or debris and construction requires a shallow body. Large top area permits use where high flow is anticipated.

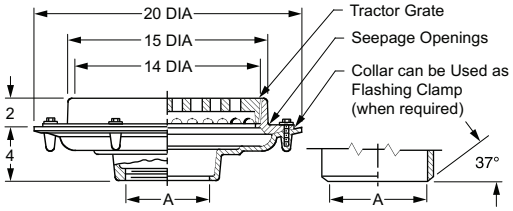

Butt Weld Outlet

A OUTLET SIZE	FREE AREA SQ IN	†-CF8 (304) STAINLESS STEEL	-CF8M (316) STAINLESS STEEL	-A27 CARBON STEEL	APPROX. WT. LBS
04, 05"	44.95	POA	POA	POA	65
06, 08"	44.95	POA	POA	POA	65

REGULARLY FURNISHED: CF8 (Equivalent to Type 304) Rough Finish Stainless Steel Body, Flashing Collar with Seepage Openings and Tractor Grate.

OUTLET VARIATIONS (Specify type of outlet and pipe size in inches.)

Outlet Type	Outlet Designation Outlet Type/Pipe Size	ADD
Butt Weld	BW04, BW05, BW06, BW08 Specify Schedule 5, 10, †40, or 80	POA
Inside Caulk	C04, C05, C06, C08	POA
Threaded	T04, T05, T06, T08	POA

OPTIONS:		ADD
-M	Ductile Iron Grate	POA
-SF	Satin Finish Top	POA
		DEDUCT
-CIG	Cast Iron Grate	POA
-RB	Rough Bronze Grate	POA
-RNB	Rough NB Grate	POA

FIG. 9734 FLOOR DRAIN 12" ROUND TOP WITH HEAVY DUTY TRACTOR GRATE

FUNCTION: Used in heavy traffic areas. Large deep body provides reservoir where heavy flow is expected, and where a corrosion resistant drain is required.

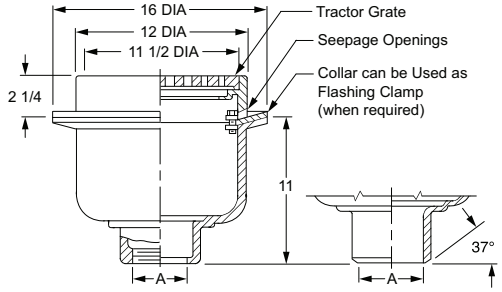

Butt Weld Outlet

A OUTLET SIZE	FREE AREA SQ IN	†-CF8 (304) STAINLESS STEEL	-CF8M (316) STAINLESS STEEL	-A27 CARBON STEEL	APPROX. WT. LBS
03, 04"	28.66	POA	POA	POA	83
05, 06"	28.66	POA	POA	POA	95

REGULARLY FURNISHED: CF8 (Equivalent to Type 304) Rough Finish Stainless Steel Body, Flashing Collar with Seepage Openings and Rough Bronze Tractor Grate.

OUTLET VARIATIONS (Specify type of outlet and pipe size in inches.)

Outlet Type	Outlet Designation Outlet Type/Pipe Size	ADD
Butt Weld	BW03, BW04, BW05, BW06 Specify Schedule 5, 10, †40, or 80	POA
Inside Caulk	C03, C04, C05, C06	POA
Threaded	T03, T04, T05, T06	POA

OPTIONS:		ADD
-A27	Carbon Steel Grate	POA
-B	Sediment Bucket (Type 304)	POA
-CF8M	Type 316 SS Grate	POA
-M	Ductile Iron Grate	POA
-RG	Rough Stainless Grate (Type 304)	POA
-RNB	Rough NB Grate	POA
-SF	Satin Finish Top	POA
-U	Vandal Proof Screws	POA
		DEDUCT
-CIG	Cast Iron Grate	POA

FIG. 9735 FLOOR DRAIN W/8 1/2" ROUND ADJUSTABLE TOP, SCORIATED COVER AND CLOSURE PLUG

FUNCTION: Used in floors where a solid cover and internal gasketed closure plug are required. Internal plug prevents sewer gas from escaping into building. Adjustable top collar permits accurate position of top cover to meet finished floor.

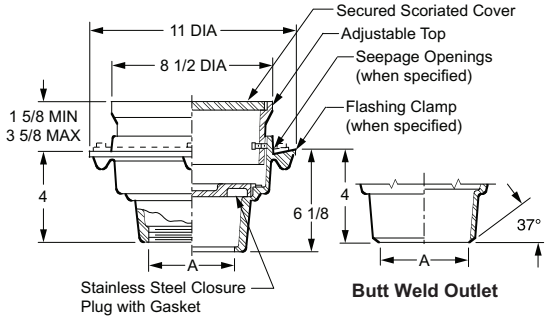

A OUTLET SIZE	†-CF8 (304) STAINLESS STEEL	-CF8M (316) STAINLESS STEEL	-A27 CARBON STEEL	APPROX. WT. LBS
02, 03, 04"	POA	POA	POA	21

REGULARLY FURNISHED: CF8 (Equivalent to Type 304) Rough Finish Stainless Steel Body, Adjustable Top, Secured Scoriated Cover and Gasketed Stainless Steel Closure Plug.

OUTLET VARIATIONS (Specify type of outlet and pipe size in inches.)

Outlet Type	Outlet Designation Outlet Type/Pipe Size	ADD
Butt Weld	BW02, BW03, BW04 Specify Schedule 5, 10, †40, or 80	POA
Inside Caulk	C02, C03, C04	POA
Threaded	T02, T03, T04	POA

OPTIONS:		ADD
-A27	Carbon Steel Grate	POA
-C	Flashing Clamp (Type 304)	POA
-E04	4" Extension (Type 304)	POA
-SF	Satin Finish Top	POA
-TP	3/4" Test Plug (for Closure Plug)	POA
-U	Vandal Proof Screws	POA
-W	Seepage Holes	POA
		DEDUCT
-XPP	Closure Plug and Gasket Plastic Closure Plug (XPP)	POA

FIG. 9740 INDIRECT WASTE RECEPTOR

FUNCTION: Used in areas where an indirect waste receptor is required and not subject to foot or other traffic. Rectangular shape permits installation against wall with short dimension protruding away from wall.

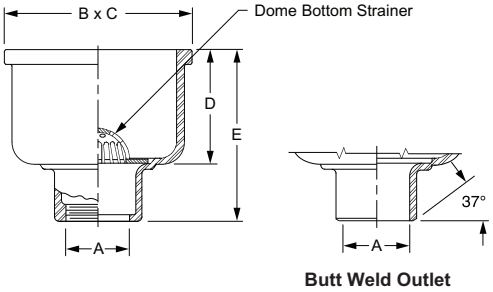

A OUTLET SIZE	BxC TOP SIZE	D	E	†-CF8 (304) STAINLESS STEEL	-CF8M (316) STAINLESS STEEL	-A27 CARBON STEEL	APPROX. WT LBS.
03"	4x8"	3"	5 1/2"	POA	POA	POA	21
03,04,06"	6x12"	7 1/4"	10 1/2"	POA	POA	POA	23

REGULARLY FURNISHED: CF8 (Equivalent to Type 304) Rough Finish Stainless Steel Body with Aluminum Dome Bottom Strainer.

OUTLET VARIATIONS (Specify type of outlet and pipe size in inches.)

Outlet Type	Outlet Designation Outlet Type/Pipe Size	ADD
Butt Weld	BW03, BW04, BW06 Specify Schedule 5, 10, †40, or 80	POA
Inside Caulk	C03, C04, C06	POA

OPTIONS:		ADD
-DBSCI	CI Dome Bottom Strainer (Not avail. for 4x8" top size)	POA
-F	304 SS Flange, 4x8" Top	POA
-F	304 SS Flange, 6x12" Top	POA
-FC	304 Flange & Clamp 4x8" Top (Type 304)	POA
-FC	304 Flange & Clamp 6x12" Top (Type 304)	POA
-SDBS	304 SS Dome Bottom Strainer	POA
-TP	3/4" Test Plug (for Closure Plug) (Type 304)	POA
-W	Seepage Holes	POA
-XP	Closure Plug & Gasket	
	Plastic (XPP)	POA
	Type 304 SS (XPSS)	POA

FIG. 9745 GUTTER DRAIN

FUNCTION: Used in gutters or other areas where a rectangular top is desired.

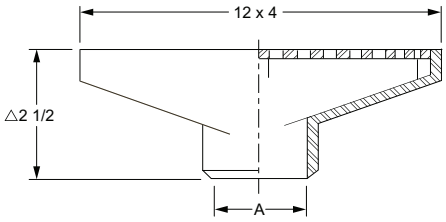

A OUTLET SIZE	TOP SIZE	FREE AREA SQ IN	†-CF8 (304) STAINLESS STEEL	-CF8M (316) STAINLESS STEEL	-A27 CARBON STEEL	APPROX. WT. LBS
02, 03	12x4"	11.50	POA	POA	POA	10

REGULARLY FURNISHED: CF8 (Equivalent to Type 304) Rough Finished Stainless Steel Body and Secured Stainless Steel Grate.

OUTLET VARIATIONS (Specify type of outlet and pipe size in inches.)

Outlet Type	Outlet Designation Outlet Type/Pipe Size	ADD
Butt Weld	BW02, BW03 Specify Schedule 5, 10, †40, or 80	POA

OPTIONS:		ADD
-U	Vandal Proof Screws	POA
-SF	Satin Finish Top	POA

△add 1/8" for nickel bronze frame and grate.

FIG. 9750 INTEGRAL TRAP DRAIN WITH FLOOR LEVEL CLEANOUT

FUNCTION: Used in moderate traffic areas where deep trap seal, floor level cleanout and shallow side outlet rough-in are required where limited space is available.

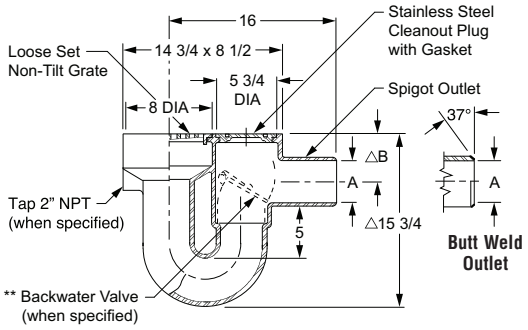

OUTLET VARIATIONS (Specify type of outlet and pipe size in inches.)

Outlet Type	Outlet Designation Outlet Type/Pipe Size	ADD
Butt Weld	BW03, BW04	POA
	Specify Schedule 5, 10, †40, or 80	
Spigot	S03, S04	POA

OPTIONS:		ADD
-N2	2" NPT Auxiliary Inlet	POA
-SF	Satin Finish Top	POA
-SEC	Secured Grate	POA
-SW	Spanner Wrench	POA
-U	Vandal Proof Screws	POA
-V	304 SS Backwater Valve	POA
		DEDUCT
-NB	NB Frame, Grate & CO Cover	POA

A OUTLET SIZE	FREE AREA SQ IN	†-CF8 (304) STAINLESS STEEL	-CF8M (316) STAINLESS STEEL	-A27 CARBON STEEL	APPROX. WT. LBS
03, 04"	20.50	POA	POA	POA	21

REGULARLY FURNISHED: CF8 (Equivalent to Type 304) Rough Finish Stainless Steel Body, Loose Set Non-Tilt Grate and Cleanout Plug with Gasket.

** NOTE: These valves offer protection against backwater surges. Backflow is prevented when not obstructed by debris or sludge. Use for gravity flow only, not pressurized application.

△add 1/4" when Nickel Bronze Top is specified.

SPECIALTIES

FIG. 9755 SQUARE HEAVY DUTY DRAIN W/POLISHED BRONZE TOP AND FREE STANDING SEDIMENT BUCKET

FUNCTION: Used in traffic areas and areas that require an offset outlet and rectangular top.

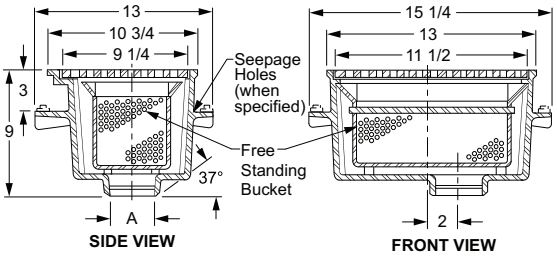

OUTLET VARIATIONS (Specify type of outlet and pipe size in inches.)

Outlet Type	Outlet Designation Outlet Type/Pipe Size	ADD
Butt Weld	BW02, BW03, BW04	
	BW05, BW06	POA
	Specify Schedule 5, 10, †40, or 80	

OPTIONS:		ADD
-C	Flashing Clamp w/Seepage Holes (Type 304)	POA
-RNB	Rough NB Grate	POA
-W	Seepage Holes	POA
-316G	CF8M Grate	POA
-304G	CF8 Grate	POA

A OUTLET SIZE	TOP SIZE	FREE AREA SQ IN	†-CF8 (304) SS BODY PB GRATE	-CF8M (316) SS BODY PB GRATE	-A27 CARBON STL PB GRATE	APPROX. WT LBS.
02, 03, 04"	10 3/4 x 13"	42	POA	POA	POA	65
05, 06"	10 3/4 x 13"	42	POA	POA	POA	65

REGULARLY FURNISHED: CF8 (Equivalent to Type 304) Rough Finish Stainless Steel Body with Sediment Bucket and Heavy Duty Loose Set Polished Bronze Grate.

FIG. 9759 90° SIDE OUTLET

FUNCTION: The 90° outlet is used to convert a bottom outlet drain to a side outlet connection.

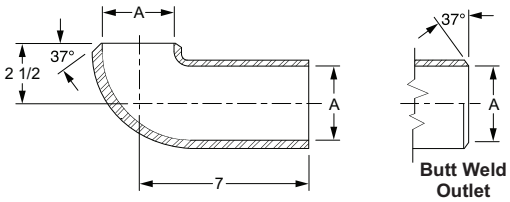

OUTLET VARIATIONS (Specify type of outlet and pipe size in inches.)

Outlet Type	Outlet Designation Outlet Type/Pipe Size	ADD
Butt Weld	BW02, BW03, BW04	POA
	Specify Schedule 5, 10, †40, or 80	
Spigot	S02, S03, S04	POA

A OUTLET SIZE	†-CF8 (304) STAINLESS STEEL	-CF8M (316) STAINLESS STEEL	-A27 CARBON STEEL	APPROX. WT. LBS
02"	POA	POA	POA	3
03"	POA	POA	POA	5
04"	POA	POA	POA	7

REGULARLY FURNISHED: CF8 (Equivalent to Type 304) Rough Finish Stainless Steel Elbow with Butt Weld Inlet Connection and Plain End Spigot Outlet.

FIG. 9760 ROUND DECK PLUG

FUNCTION: Used as floor cleanout for drainage lines. Cover is water and gas tight and requires a spanner wrench for removal.

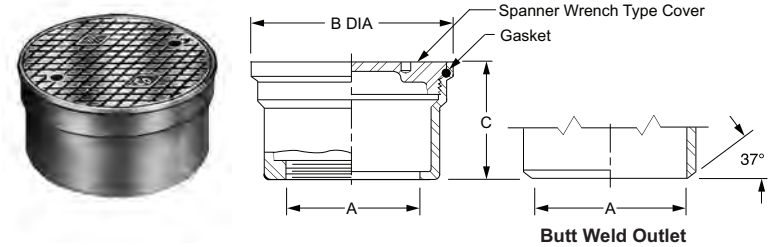

OUTLET VARIATIONS (Specify type of outlet and pipe size in inches.)

Outlet Type	Outlet Designation Outlet Type/Pipe Size	ADD
Butt Weld*	Specify Fig. Number 9762	Call Factory
Threaded	T02, T03, T04	POA

OPTIONS: ADD

-SW Steel Spanner Wrench ..... POA

A OUTLET SIZE	B DIA CAULK	B DIA *BUTT WELD	C CAULK	C *BUTT WELD	†-CF8 (304) STAINLESS STEEL	-CF8M (316) STAINLESS STEEL	-A27 CARBON STEEL	APPROX. WT. LBS
02"	4 1/2"	4 1/2"	3"	3"	POA	POA	POA	5
03"	5 1/2"	4 1/2"	3"	3"	POA	POA	POA	5
04"	7 1/2"	5 1/2"	3 1/4"	3 1/4	POA	POA	POA	10

REGULARLY FURNISHED: CF8 (Equivalent to Type 304) Rough Finish Stainless Steel Body and Cover with Gasket.

FIG. 9770 FERRULE AND PLUG

FUNCTION: Used where extension type of cleanout is required. Not recommended for installation in floor areas subject to traffic unless access cover is provided.

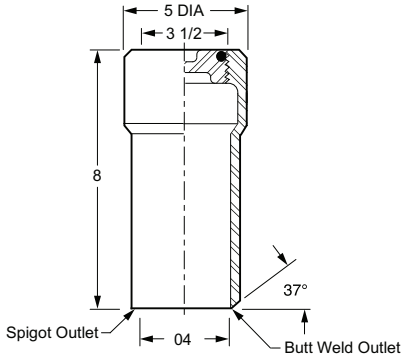

OUTLET VARIATIONS (Specify type of outlet and pipe size in inches.)

Outlet Type	Outlet Designation Outlet Type/Pipe Size	ADD
Butt Weld	BW04 Specify Schedule 5, 10, †40, or 80	POA

OPTIONS: ADD

-SF Satin Finish Top ..... POA

A OUTLET SIZE	†-CF8 (304) STAINLESS STEEL	-CF8M (316) STAINLESS STEEL	-A27 CARBON STEEL	APPROX. WT. LBS
04"	POA	POA	POA	10

REGULARLY FURNISHED: CF8 (Equivalent to Type 304) Rough Finish Stainless Steel Body and Plug with Gasket.

FIG. 9775, 9776 WALL CLEANOUTS

FUNCTION: Used in female NPT openings in drainage piping where a cleanout is required. Face-of-wall cover is desirable on finished walls.

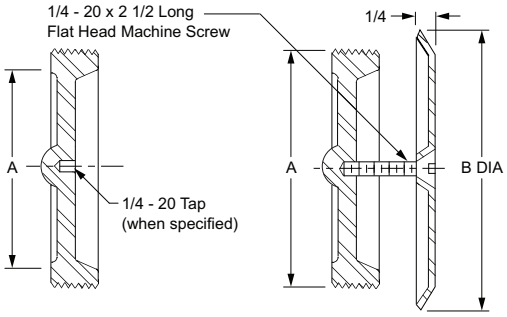

Fig. 9775 Fig. 9776

OUTLET VARIATIONS (Specify type of outlet and pipe size in inches.)

Outlet Type	Outlet Designation Outlet Type/Pipe Size	ADD
Threaded	T03, T04	POA

OPTIONS: ADD

-LS 6" Long Center Screw (Fig 9776) ..... POA
-TP Plug Tapped 1/4-20 Thread (Fig 9775) ..... POA
-U Vandal Proof Screws (Fig 9776) ..... POA

FIGURE NO.	A OUTLET SIZE	B DIA COVER SIZE	†-CF8 (304) STAINLESS STEEL	-CF8M (316) STAINLESS STEEL	-A27 CARBON STEEL	APPROX. WT. LBS
9775	03"	–	POA	POA	POA	3
	04"	–	POA	POA	POA	5
9776	03"	5 1/2"	POA	–	–	3
	04"	7 1/4"	POA	–	–	5

REGULARLY FURNISHED: CF8 (Equivalent to Type 304) Rough Finish Stainless Steel Plug. Screw with Polished Stainless Steel Cover Plate as Indicated by Figure Number.

FIG. 9780 LARGE GENERAL PURPOSE ROOF DRAIN

FUNCTION: Used in flat roofs of any construction. Large low profile dome provides sufficient free area for quick drainage of rain water and protects the drain sump and connected piping from the intrusion of debris. Wide clamping surface holds flashing and roofing materials without puncturing.

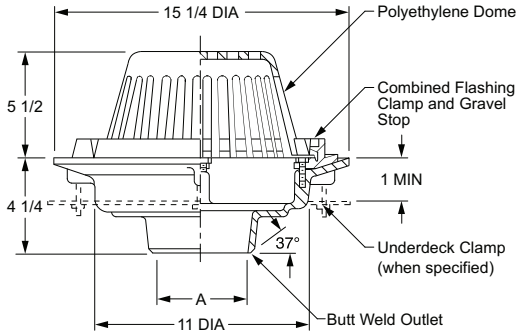

OUTLET VARIATIONS (Specify type of outlet and pipe size in inches.)

Outlet Type	Outlet Designation Outlet Type/Pipe Size	ADD
Butt Weld	BW03, BW04, BW06 Specify Schedule 5, 10, †40, or 80	POA

OPTIONS:		ADD
-A27D	Carbon Steel Dome	POA
-C	Underdeck Clamp	POA
-CID	Cast Iron Dome	POA
-SD	Secured Dome	POA
-U	Vandal Proof	POA
-304D	Type 304 Steel Dome	POA
-316D	Type 316 Steel Dome	POA

A OUTLET SIZE	FREE AREA SQ IN	†-CF8 (304) SS BODY, COLLAR POLY DOME	-CF8M (316) SS BODY, COLLAR POLY DOME	-A27 STL BODY, COLLAR POLY DOME	APPROX. WT. LBS
03, 04"	102.5	POA	POA	POA	35
06"	102.5	POA	POA	POA	37

REGULARLY FURNISHED: CF8 (Equivalent to Type 304) Rough Finish Stainless Steel Body. Combined Flashing Collar and Gravel Stop and Polyethylene Dome.

SPECIALTIES

FIG. 9785 SCUPPER DRAIN

FUNCTION: Used at junction of roof and parapet. The angle grate prevents debris from blocking drainage.

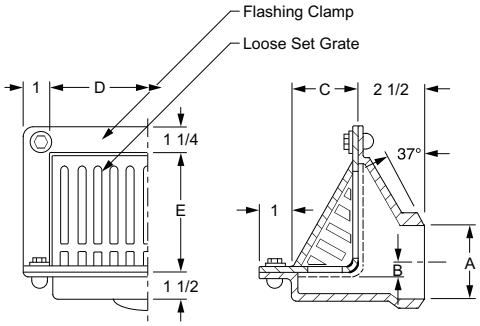

OUTLET VARIATIONS (Specify type of outlet and pipe size in inches.)

Outlet Type	Outlet Designation Outlet Type/Pipe Size	ADD
Butt Weld	BW02, BW03, BW04	POA
	BW05, BW06	POA
	Specify Schedule 5, 10, †40 or 80	
T	Threaded Outlet	POA

OPTIONS:		ADD
-A27G	Carbon Steel Frame and Grate	POA
-U	Vandal Proof Screws	POA
-304G	Type 304 Grate (02-04")	POA
-304G	Type 304 Grate (05-06")	POA
-316G	Type 316 Grate (02-04")	POA
-316G	Type 316 Grate (05-06")	POA
-304C	Type 304 Clamping Collar (02-04")	POA
-316C	Type 316 Clamping Collar (02-04")	POA

A OUTLET SIZE	B	C	D	E	FREE AREA SQ IN	†-CF8 (304) SS BODY, NB FRAME AND GRATE	-CF8M (316) SS BODY, NB FRAME AND GRATE	-A27 STL BODY NB FRAME AND GRATE	APPROX. WT. LBS
02, 03"	1/4"	3 1/4"	8 3/4"	5"	17.87	POA	POA	POA	17
04"	1/2"	3 1/4"	8 3/4"	5"	17.87	POA	POA	POA	17
05, 06"	1 3/4"	4"	10 1/2"	6 1/2"	35	POA	POA	POA	25

REGULARLY FURNISHED: CF8 (Equivalent to Type 304) Rough Finish Stainless Steel Body with Nickel Bronze Loose Set Grate and Clamping Collar.

FIG. 9790 PIT DRAIN WITH BACKWATER VALVE

FUNCTION: Used at base of side walls in pits, where low elevation requires a vertical inlet grate and side outlet roughing. Unless obstructed by debris or sludge, SMITH backflow valves prevent backflow which could damage equipment in pit. Used for gravity flow, not for high flow pump applications.

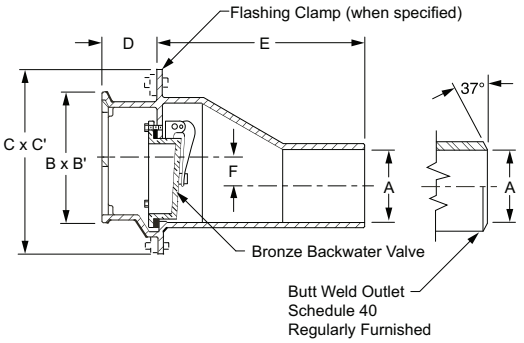

OUTLET VARIATIONS (Specify type of outlet and pipe size in inches.)

Outlet Type	Outlet Designation Outlet Type/Pipe Size	ADD
Butt Weld	BW03, BW04, BW05	
	BW06, BW08	POA
	Specify Schedule 5, 10, †40 or 80	
Spigot	S03, S04, S05	
	S06, S08	POA

OPTIONS:		ADD
-A27G	Carbon Steel Grate	POA
-C	Galv. Clamping Collar	POA
-U	Vandal Proof	POA
-V	Type 304 SS Backwater Valve	POA
-316G	Type 316 Grate	POA
		DEDUCT
-CIG	Cast Iron Grate	POA

A OUTLET SIZE	B X B'	C X C'	D	E	F	FREE AREA SQ IN	†-CF8 (304) STAINLESS STEEL	-CF8M (316) STAINLESS STEEL	-A27 CARBON STEEL	APPROX. WT. LBS
03, 04"	6 3/4 x 9 1/2"	10 1/4 x 12"	3"	11 1/4"	2 3/4"	15.07	POA	POA	POA	47
05, 06"	7 3/4 x 11	9 3/4 x 13"	4"	13 1/4"	1 1/4"	24.57	POA	POA	POA	76
08"	12 1/2 x 14 1/2"	17 1/4 x 19"	4"	22"	3 1/2"	56.14	POA	POA	POA	164

REGULARLY FURNISHED: CF8 (Equivalent to Type 304) Rough Finish Stainless Steel Body with Secured Grate and Bronze Backwater Valve.

FIG. 9795 BACKWATER VALVE

FUNCTION: Used in main or branch sewer lines to protect against backflow. SMITH backwater valves prevent hazardous or damaging backflow unless obstructed by debris or sludge. Valve design permits access to backwater valve assembly servicing or cleaning through a "full opening" cover.

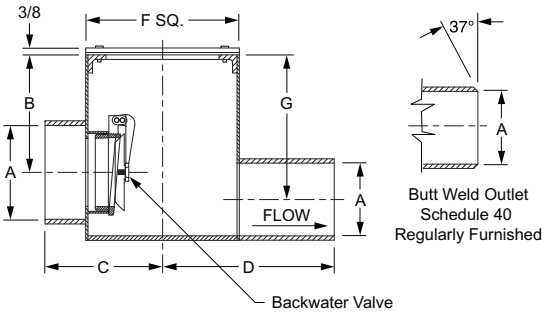

OUTLET VARIATIONS (Specify type of outlet and pipe size in inches.)

Outlet Type	Outlet Designation Outlet Type/Pipe Size	ADD
Butt Weld	BW03, BW04	POA
	Specify Schedule 5, 10, †40 or 80	

OPTIONS:		ADD
-U	Vandal Proof	POA

A OUTLET SIZE	B	C	D	F SQ	G	†-CF8 (304) STAINLESS STEEL	-CF8M (316) STAINLESS STEEL	-A27 CARBON STEEL	APPROX. WT. LBS
03"	6 1/4"	5 3/4"	9"	7 1/2"	7 1/2"	POA	POA	POA	47
04"	6 1/2"	6 1/2"	9 1/2"	8 1/2"	8"	POA	POA	POA	76

REGULARLY FURNISHED: Fabricated Type 304 Stainless Steel Body, Bolted Cover and Bronze Backwater Valve.

INSTALLATION DATA FOR STAINLESS STEEL CARBON STEEL DRAINS AND CLEANOUTS

FOR ANCHORING

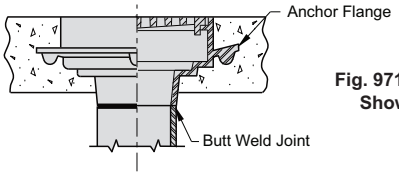

Fig. 9710BW Shown

Floor drains with integral flanges are ideal for anchoring in slab. Regularly furnished with no seepage holes.

FOR ANCHORING AND SEEPAGE

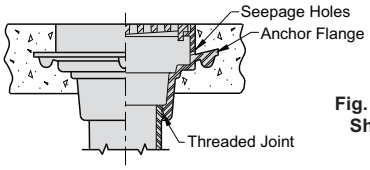

Fig. 9710T Shown

Seepage holes are furnished only when specified. Seepage holes permit moisture which may seep through concrete to collect on drain flange and flow back into drain.

FOR WATERPROOF FLOORS

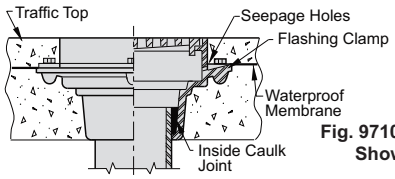

Fig. 9710C (-C) Shown

Flashing Clamp -C furnished when specified to clamp waterproof membrane to drain body flange. Seepage holes are always furnished with flashing clamp.

FLOOR DRAINS WITH EXTENSIONS

FIXED

Extension 4" high regular. Specify lower or higher. End of extension is machined (O.D.) to fit snugly in grate recess of drain body. May be laid in loose or welded in field.

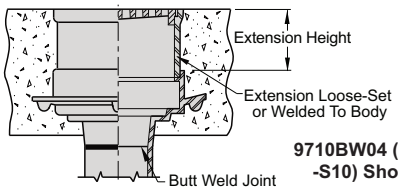

9710BW04 (-E04, -S10) Shown

ADJUSTABLE

When limited adjustment to varying finished floor is required, the adjustable top is applicable. Ideal for use where slab thickness may vary slightly. This top can be adjusted before final pour is made. Ideal for "Two Pour" construction where finished traffic deck thickness may vary.

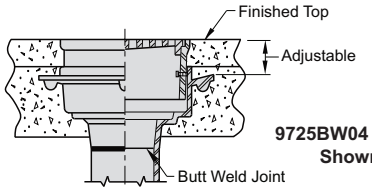

9725BW04 (-S10) Shown

SIDE OUTLET DRAINS

8 1/2" TOP WITH EXTENSION

Fixed extension will permit installer to rough side outlet under slab. Side outlet connection enables joint to be below slab and piping directed to side wall.

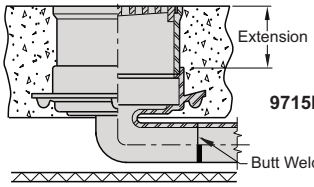

9715BW04 (-S10) Shown

INTEGRAL TRAP TYPE

Installed where side outlet and integral trap are required, and drain must be installed in the slab. Combines all required features (including floor level cleanout) in one casting.

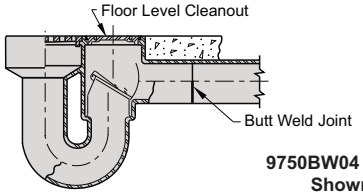

9750BW04 (-S10) Shown

CLEANOUTS

DECK PLUG

Installed directly on pipe end and imbedded in concrete slab. Cover is threaded and gasketed.

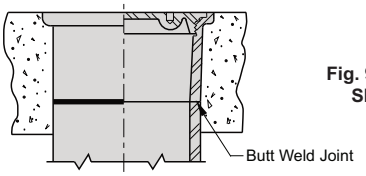

Fig. 9760BW Shown

FLOOR DRAIN TYPE

Floor drain type with solid scoriated cover and internal gasketed closure plug makes an ideal floor cleanout in construction where a flange is required as an anchor or to receive a flashing clamp. For adjustable top use 9735 series.

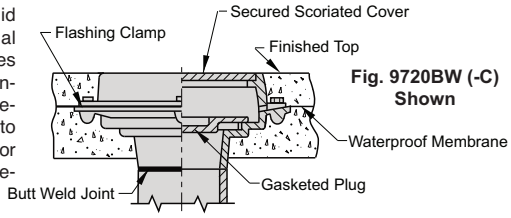

Fig. 9720BW (-C) Shown

INDIRECT WASTE DRAINS

FUNNEL TYPE

All Floor drains can be converted to an indirect waste drain by adding funnel to top of grate.

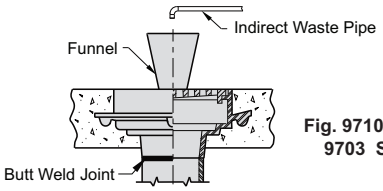

Fig. 9710BW with 9703 Shown

RECEPTOR TYPE

Indirect waste (open sight) drain mounted above floor Fig. 9740 Series 4 x 8 or 6 x 12. Rectangular shape permits installation against side wall with short dimension protruding away from wall.

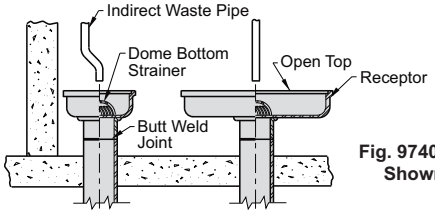

Fig. 9740BW Shown

FIXED EXTENSIONS FOR 8 1/2" ROUND TOP DRAINS (SUFFIX -E)

9725 (-E04) Shown

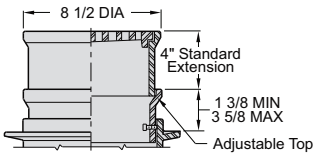

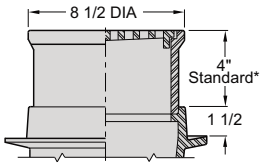

9710 (-E04) Shown

Used to accommodate deep floor slabs or where distance from flange to top of drain has to be increased. End of extension is machined to fit snugly in grate recess of drain body. May be installed loose set or field welded to drain body. Available with all 8 1/2" round top drains; Series 9705, 9710, 9715, 9720, 9725, 9735 and 9750. See Fig. Nos. 9725 and 9735 when an adjustable type extension is desired. *4" height is standard. Longer or shorter heights as specified. Min. extension height is 1".

CONSULT SMITH SALES ENGINEERING DEPT. FOR UNUSUAL APPLICATIONS AND INSTALLATIONS

CORROSION RESISTANCE DATA

SMITH CUSTOMER DRIVEN SINCE 1926

CONSULT SMITH SALES ENGINEERING DEPARTMENT

TYPICAL CORROSION RESISTANCE OF STAINLESS STEELS TO VARIOUS MEDIA

CODE: a-Unaffected, b-Slightly attacked. c-Attacked. m-Complete details concerning the conditions of service must be evaluated.

MEDIUM	TYPE NUMBERS CF8 (304)	CF8M (316)
ORGANIC SUBSTANCES		
Acetone	a	a
Benzol	a	a
Carbon tetrachloride	c	c
Ethyl alcohol	a	a
Ethyl chloride	a	a
Ethyl ether	a	a
Food pastes	a	a
Fruit juices	a	a
Ink	m	m
Mustard	b	a
Paregoric cmpd	a	a
Quinine bisulfate	b	a
Quinine sulfate	a	a
Vinegar at 70° F	m	m
ACIDS		
Acetic	m	m
Benzoic	a	a
Boric	a	a
Carbolic	a	a
Chromic (50%)	c	c
Citric	a	a
Formic	c	m
Hydrobromic	c	c
Hydrocyanic	a	a
Hydrochloric	c	c
Hydrofluoric	c	c
Lactic	a	a
Nitric (conc.)	a	a
Nitric (conc. plus 2% HCl)	a	..
Nitrous (conc.)	a	a
Oxalic	m	m
Phosphoric	a	a
Phosphoric (10%)	a	a
Picric (conc.)	a	a
Phyrogallic (conc.)	a	a
Pyroligneus (conc.)	a	a
Stearic (conc.)	a	a
Succinic (molten)	c	..
Sulfuric (conc.)	a	a
Sulfuric (dil.)	m	m
Sulfuric 15% (plus 2% potassium dichromate)	a	a
Sulfurous (conc.)	b	a
Tannic (conc.)	a	a
Tartaric (conc.)	a	a
Trichloracetic acid (10%)	a	a
Uric (conc.)	a	a
SALTS		
Aluminum chloride	c	c
Aluminum fluoride	c	b
Aluminum sulfate	a	a
Ammonium alum	a	a
Ammonium bromide	c	a
Ammonium chloride	b	a
Ammonium hydroxide	a	a
Ammonium nitrate	a	a
Ammonium sulfate	a	a
Barium chloride	a	a
Bleaching powder	c	a
Calcium chloride	c	a
Calcium hydroxide or oxide	a	a
Copper chloride	c	c
Copper cyanide	a	a
Copper nitrate	a	a

MEDIUM	TYPE NUMBERS CF8 (304)	CF8M (316)
Copper sulfate (plus 2% sulfuric acid	a	a
Copper sulfate	a	a
Creosote	c	a
Creosote (plus 3% salt)	c	c
Hydrogen peroxide	b	a
Magnesium carbonate	a	a
Magnesium chloride	m	m
Magnesium sulfate	a	a
Magnesium hydroxide	a	a
Magnesium nitrate	a	a
Phosphorous trichloride	a	a
Potassium bromide	a	a
Potassium carbonate	a	a
Potassium chloride	m	m
Potassium chlorate	a	a
Potassium cyanide	a	a
Potassium dichromate	a	a
Potassium ferricyanide	a	a
Potassium ferricyanide (boiling)	a	a
Potassium hypochlorite	c	m
Potassium iodide	a	a
Potassium iodide (sat. plus 0.1% sodium carbonate evaporated to dryness)	a	a
Potassium hydrate	a	a
Potassium nitrate	a	a
Potassium oxalate	a	a
Potassium permanganate	a	a
Potassium sulfate	a	a
Silver nitrate	a	a
Silver cyanide	a	a
Sodium bicarbonate	a	a
Sodium borate	a	a
Sodium bromide	a	a
Sodium chloride (2% aerated)	a	a
Sodium citrate	a	a
Sodium fluoride	b	.
Sodium hydroxide	a	a
Sodium nitrate	a	a
Sodium peroxide (212° F)	a	a
Stannic chloride	c	c
Stannous chloride	b	.
Sulfar (molten) (500° F)	a	a
Sulfar chloride	b	.
Titanium tetrachloride	a	a
Zinc chloride	c	b
Zinc sulfate	a	a
MISCELLANEOUS		
Ammonia	a	a
Baking oven gases	a	a
Bromine	c	c
Carbonated beverages	a	a
Chlorine (wet and dry)	c	c
Glycerin	a	a
Hydrogen sulfide (400° F)	b	a
Iodine	c	a
Lead (molten)	c	c
Lysol	m	m
Mercury	a	a
Sauerkraut brine	c	a
Sea water	m	m
Sulfur dioxide	b	b
Vegetable juices	a	a
X-ray developing solution	b	a
Zinc (molten)	c	c

SMITH YELLOW PAGES

PG-22 PRODUCT GUIDE

SMITH®
CUSTOMER DRIVEN
SINCE 1926

JAY R. SMITH MFG. CO.®
MEMBER OF MORRIS GROUP INTERNATIONAL

Plumbing and Drainage Products
P.O. Box 3237 • Montgomery, AL 36109-0237
Tel 800-467-6484 • 334-277-8520

www.jrsmith.com

MORRIS GROUP INTERNATIONAL®
www.morrisgroup.co

SPMPG22 • 02/22